High Level RF

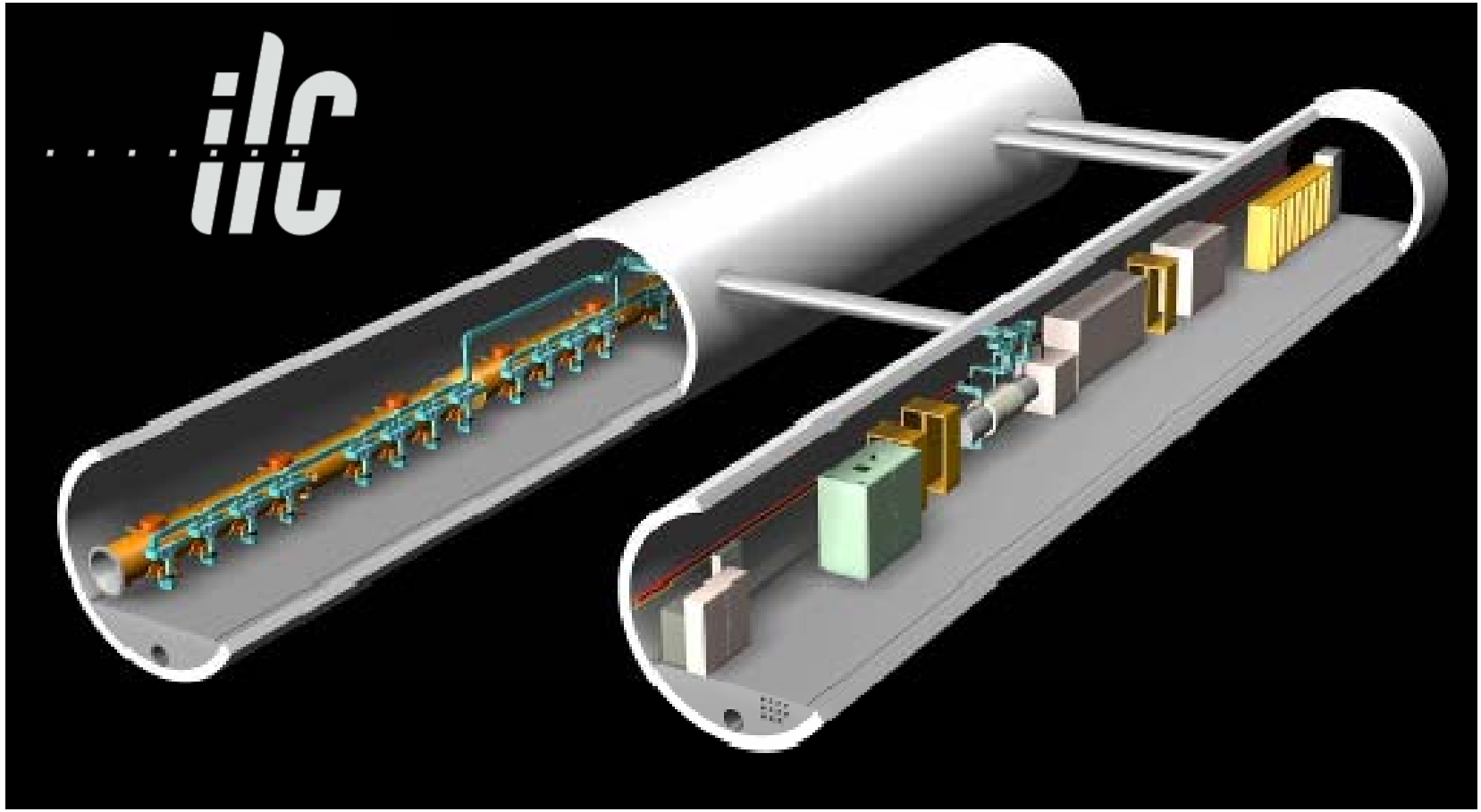

Chris Adolphsen

May 30, 2007 – GDE MAC Meeting at DESY

ILC Main Linac RF Unit (1 of 560)

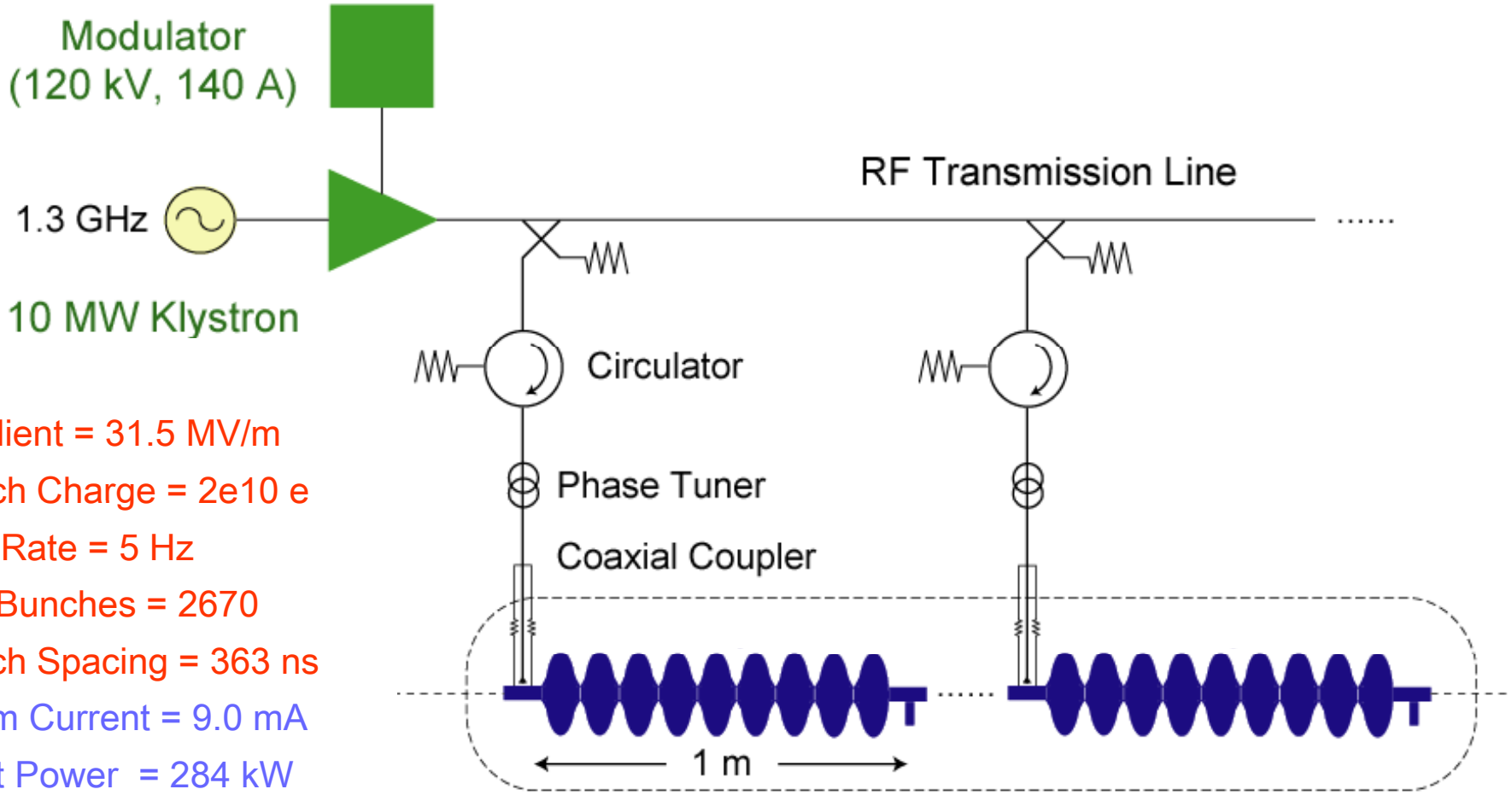

Cryomodule 1 of 3

(9-8-9 Cavities per Cryomodule)

Gradient = 31.5 MV/m

Bunch Charge = 2e10 e

Rep Rate = 5 Hz

# of Bunches = 2670

Bunch Spacing = 363 ns

Beam Current = 9.0 mA

Input Power = 284 kW

Fill Time = 596 μs

Train Length = 969 μs

BCD and ACD Modulators

(116 kV, 133 A, 1.6 ms, 5 Hz)

Baseline: Pulse Transformer Style Modulator

Alternative: Marx Generator Modulator

ILC Baseline Modulator

FNAL Design in Which a Bouncer Circuit Offsets the Voltage Droop (19%) During Discharge of a Capacitor Bank

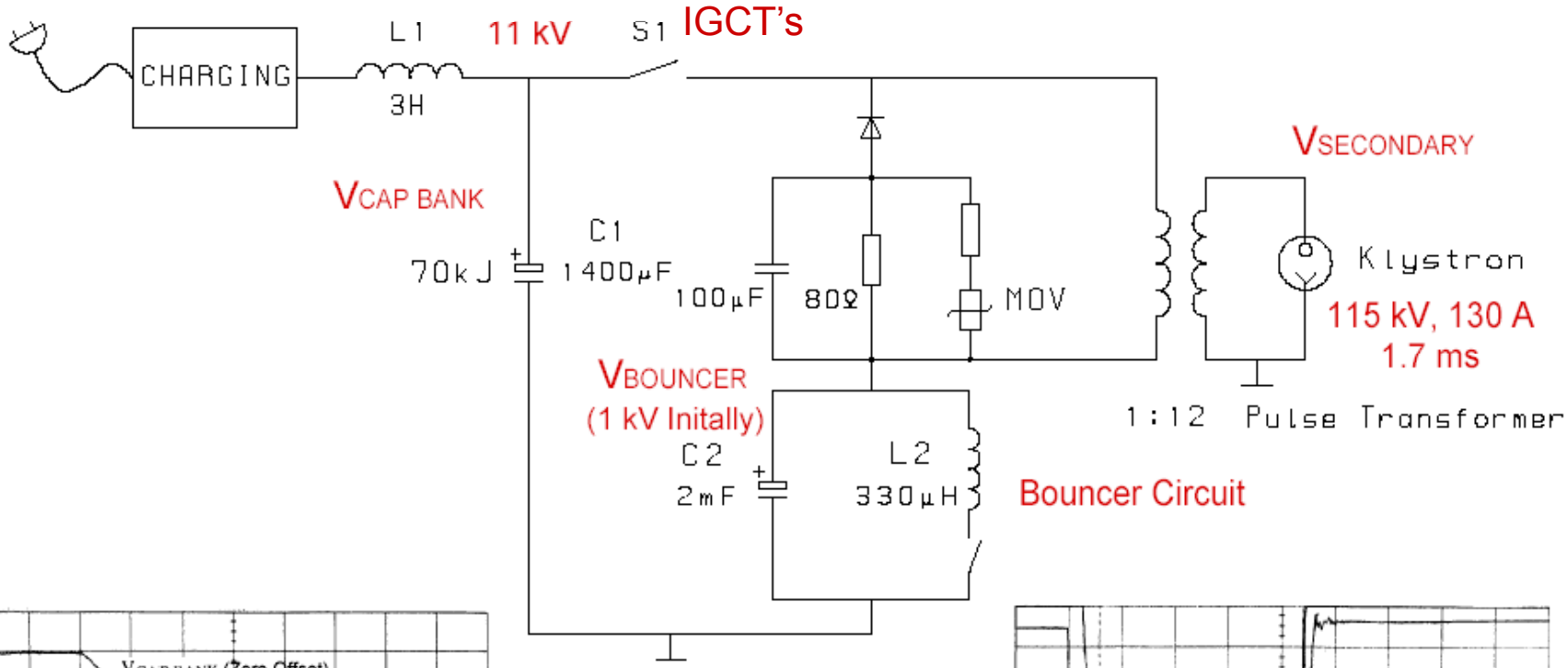

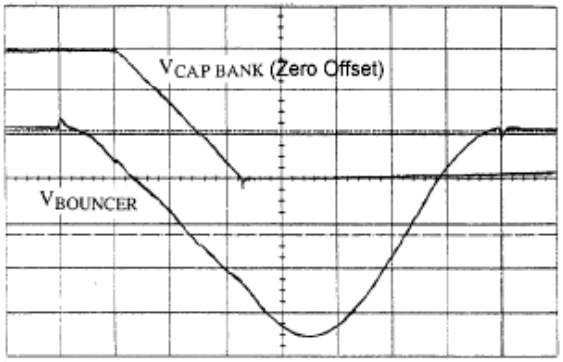

500 V/div

1 ms/div

2 kV/div (top)
20 kV/div (bottom)

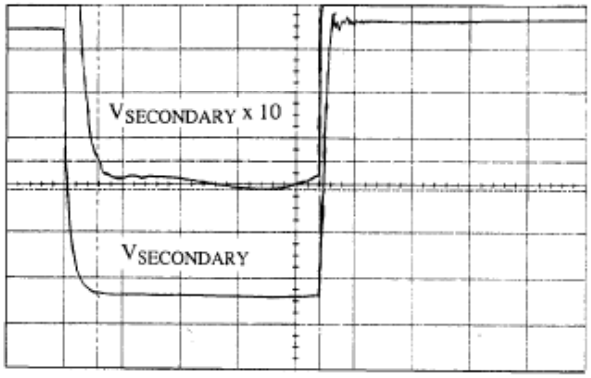

0.5 ms/div

Pulse Transformer Modulator Status

- 10 units have been built, 3 by FNAL and 7 by industry (PPT with components from ABB, FUG, Poynting) thru DESY funding.
- 8 modulators are in operation.
- 10 years operation experience.
- Working towards a more cost efficient and compact design.
- FNAL building two more, one each for ILC and HINS programs – SLAC has built switching circuits with more up-to-date technology.

Transformer (red) and Lead Box (black) Containing Klystron

3 m

HVPS and Pulse Forming Unit

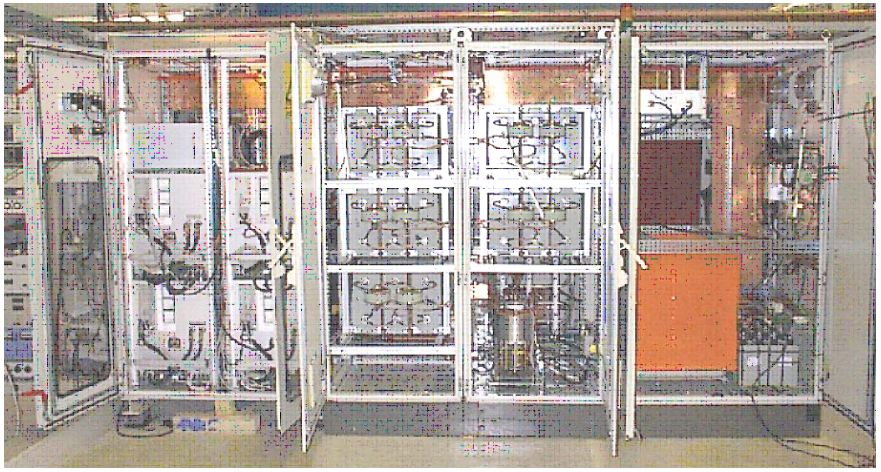

Pulse Transformer Modulator Layout

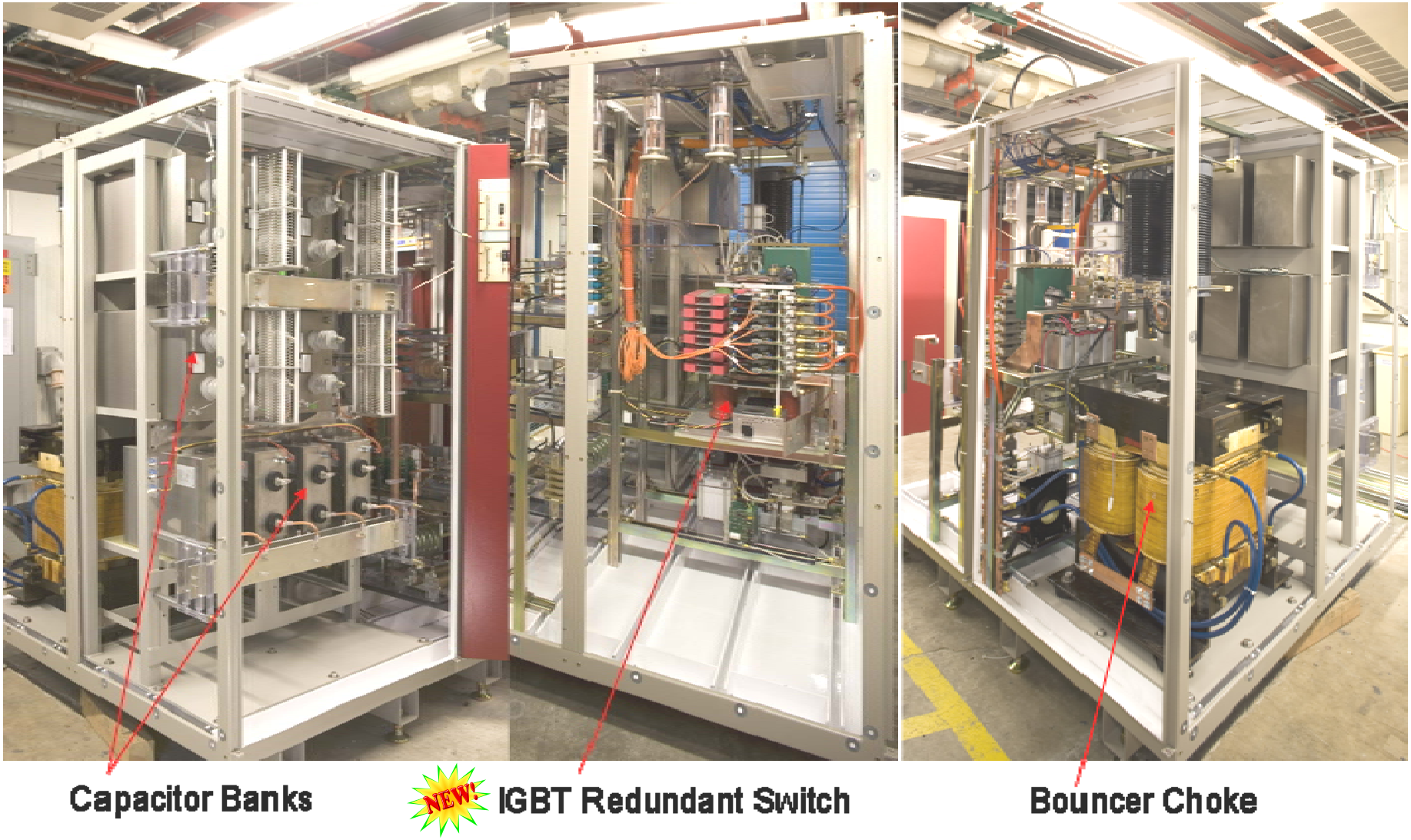

Waveform from the First of these Modulators

(Designed for 4 ms operation in support of the High Intensity Neutrino Source program)

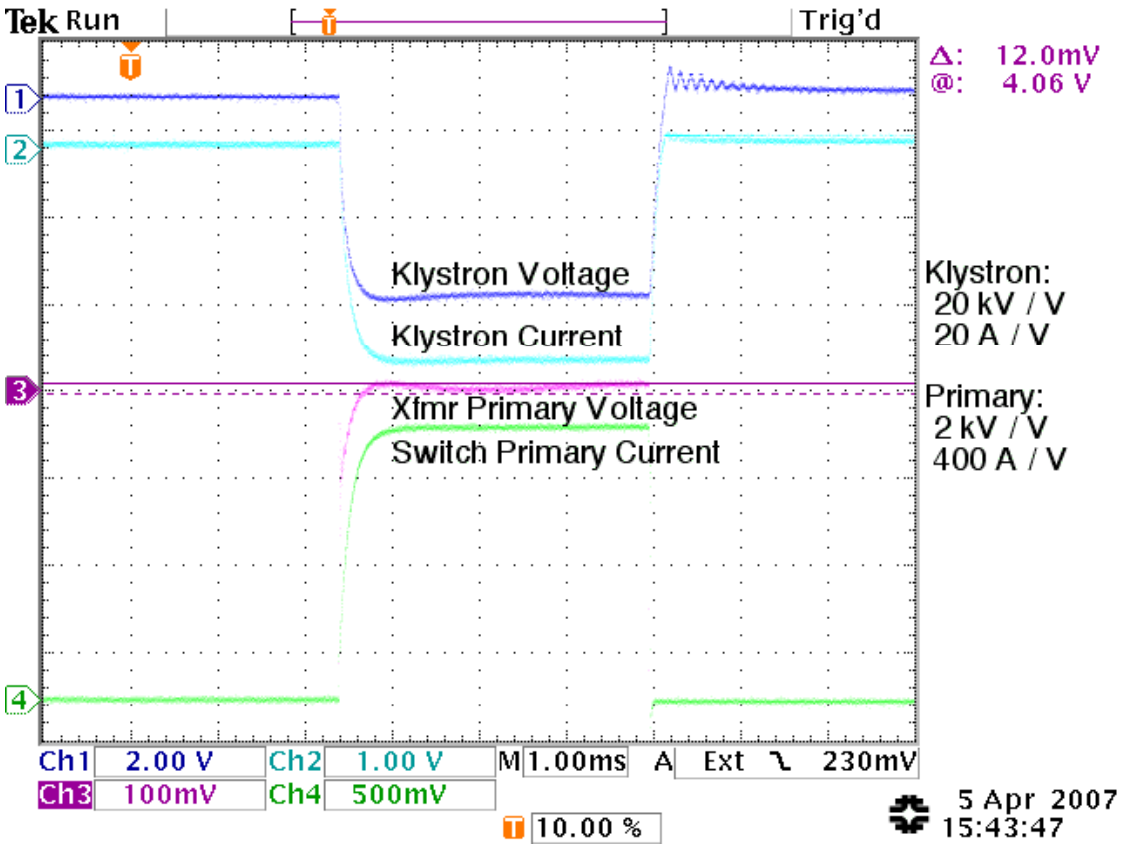

XFEL Modulator Development

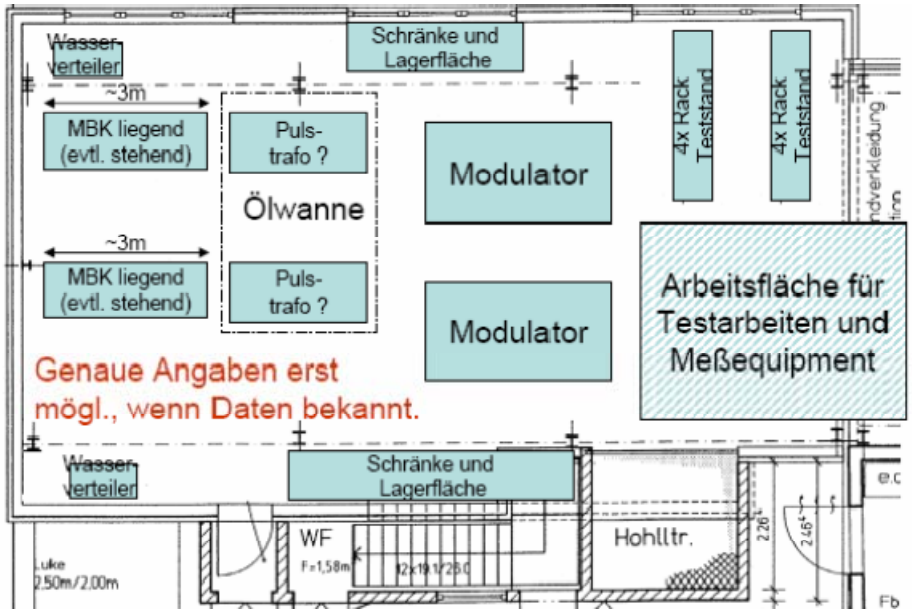

- Expand vendor base
  - Ordered 2 different prototypes from 2 vendors
    - Imtech-Vonk
    - Thompson
  - Delivery ~ Dec 2007
  - Test in new facility in Zuethen that includes the modulator, cable, pulse transformer, klystron, interlocks and controls
- Complete evaluation, submit RFQs in 2008/2009
- Expect delivery of 30-40 modulators in 2009-2011
- For ILC, compliments Marx/Direct alternative designs

Prototype #1 (Imtech-Vonk)

- Bouncer Type
  - Specified by DESY
  - 12kV HVPS
  - Bouncer 300uH/4.6kA
- 7 stage IGCT main switch
- Digital regulation circuit
- Analog inputs/outputs
- Well known and tested principle

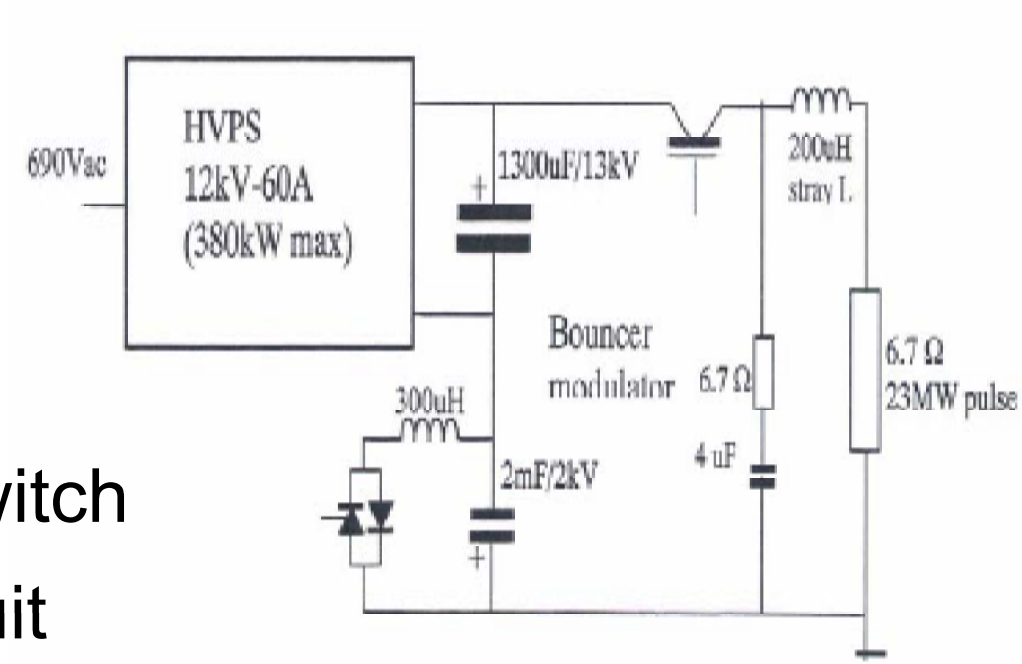

Prototype #2 (Thompson)

- Pulse Step Modulator
  - 24, ~ 0.5 kV, Marx-like cells are summed to drive a 12:1 transformer
  - Bouncer circuit eliminated
  - FPGA based control
  - 2 stages for redundancy
  - Pulse width modulation for fine control
- Slew rate and pulse shape controllable
- Concept used in PS's Thales built for the W7-X experimental fusion reactor

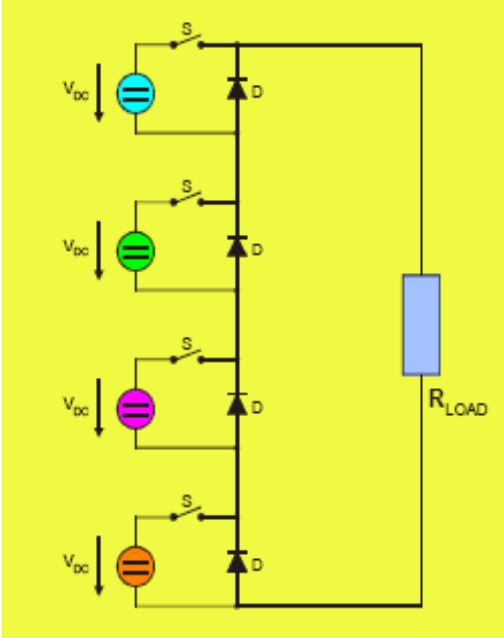

Marx Generator Modulator

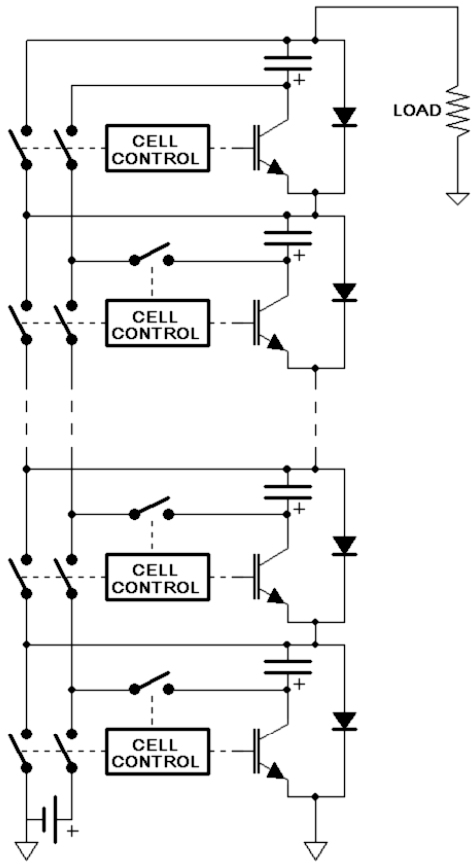

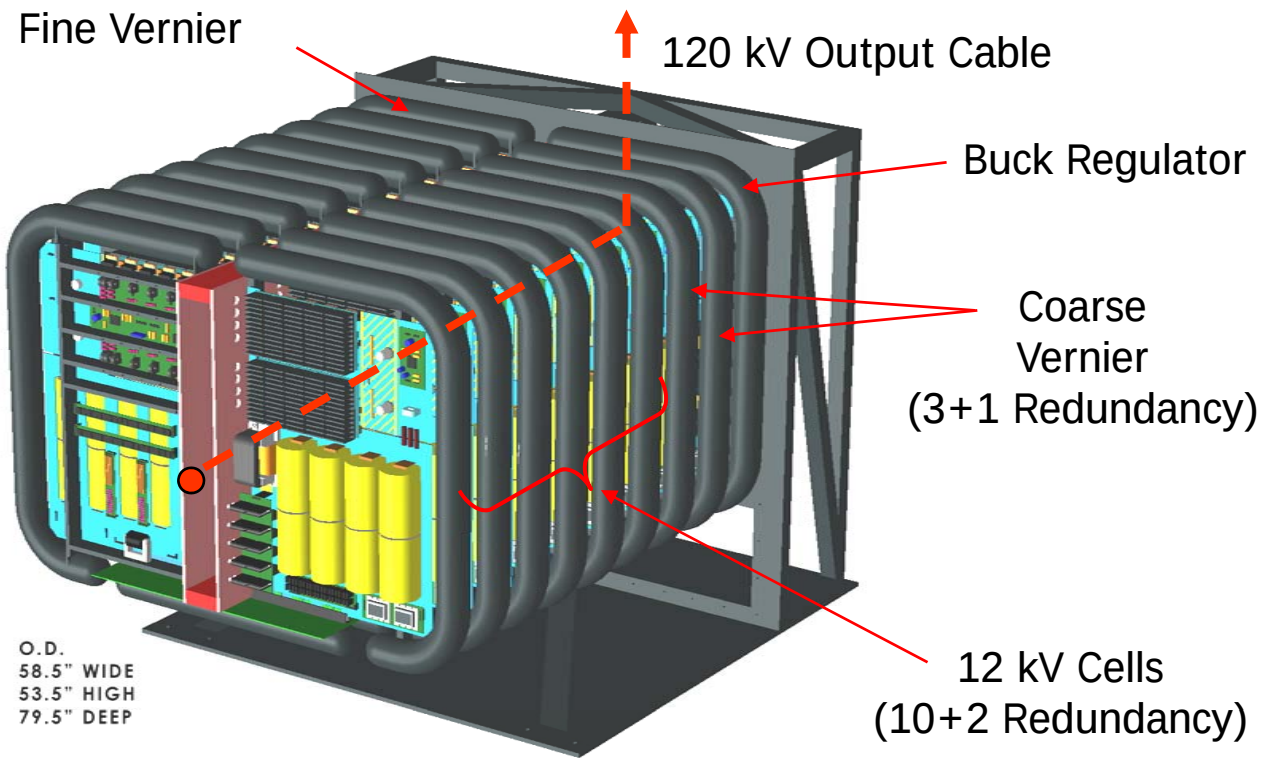

DETAIL, MARX MODULATOR CORE

12 kV Cell Detail

4+1 Redundant Switch Arrays
for charge, discharge

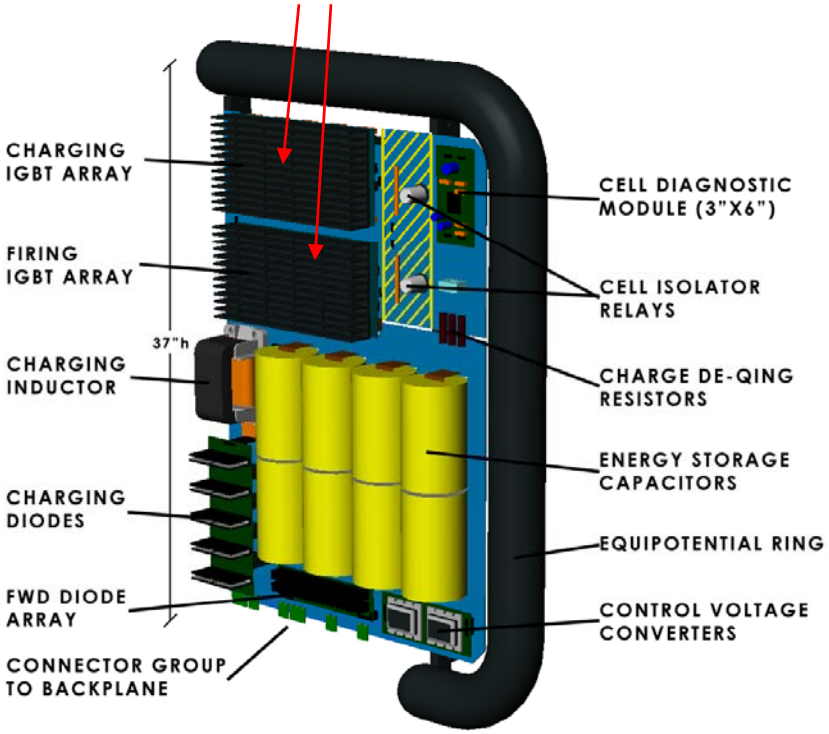

12kV MARX CELL, FRONT VIEW

6+2 Redundant
Capacitors

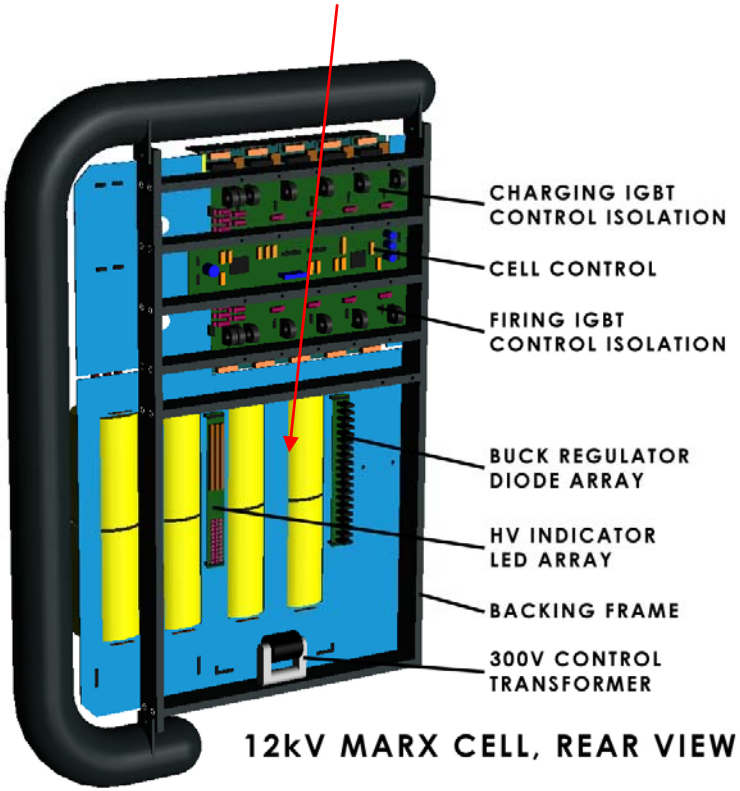

12kV MARX CELL, REAR VIEW

Diagnostic Controller Details

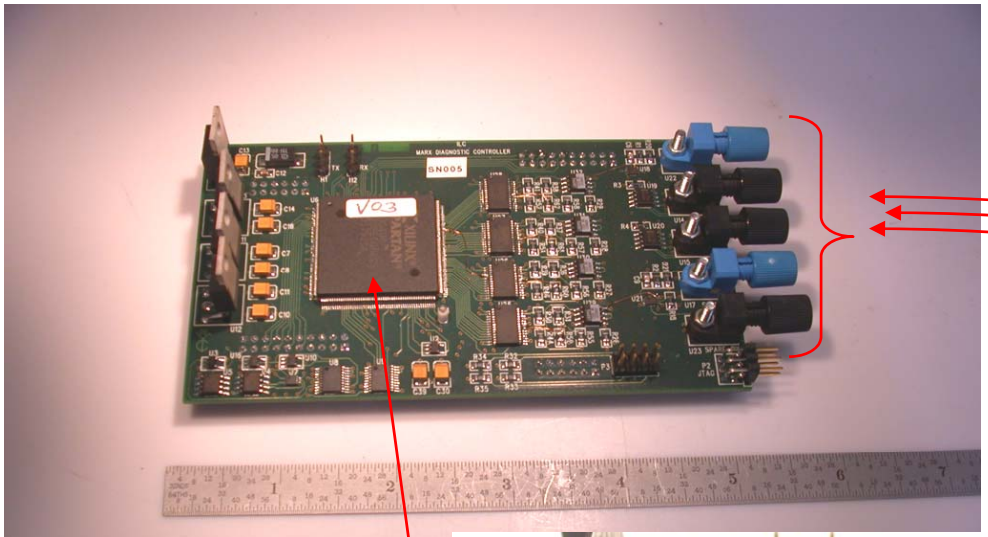

Dual Fiber Optic Timing & Data Links

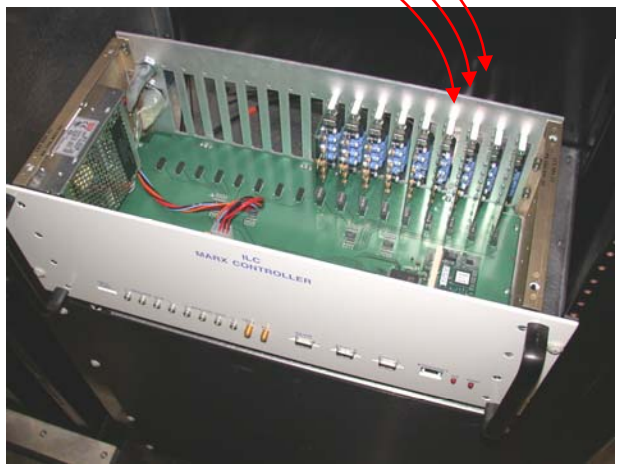

Programmable Logic Array

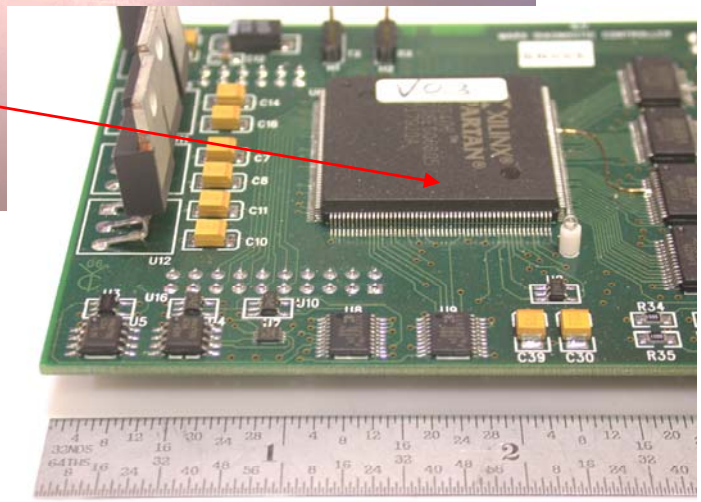

Duplex Timing & Data Channels Each Cell (Mounted on Rear)

16 Ch Ground Station

Marx Cell Component Testing

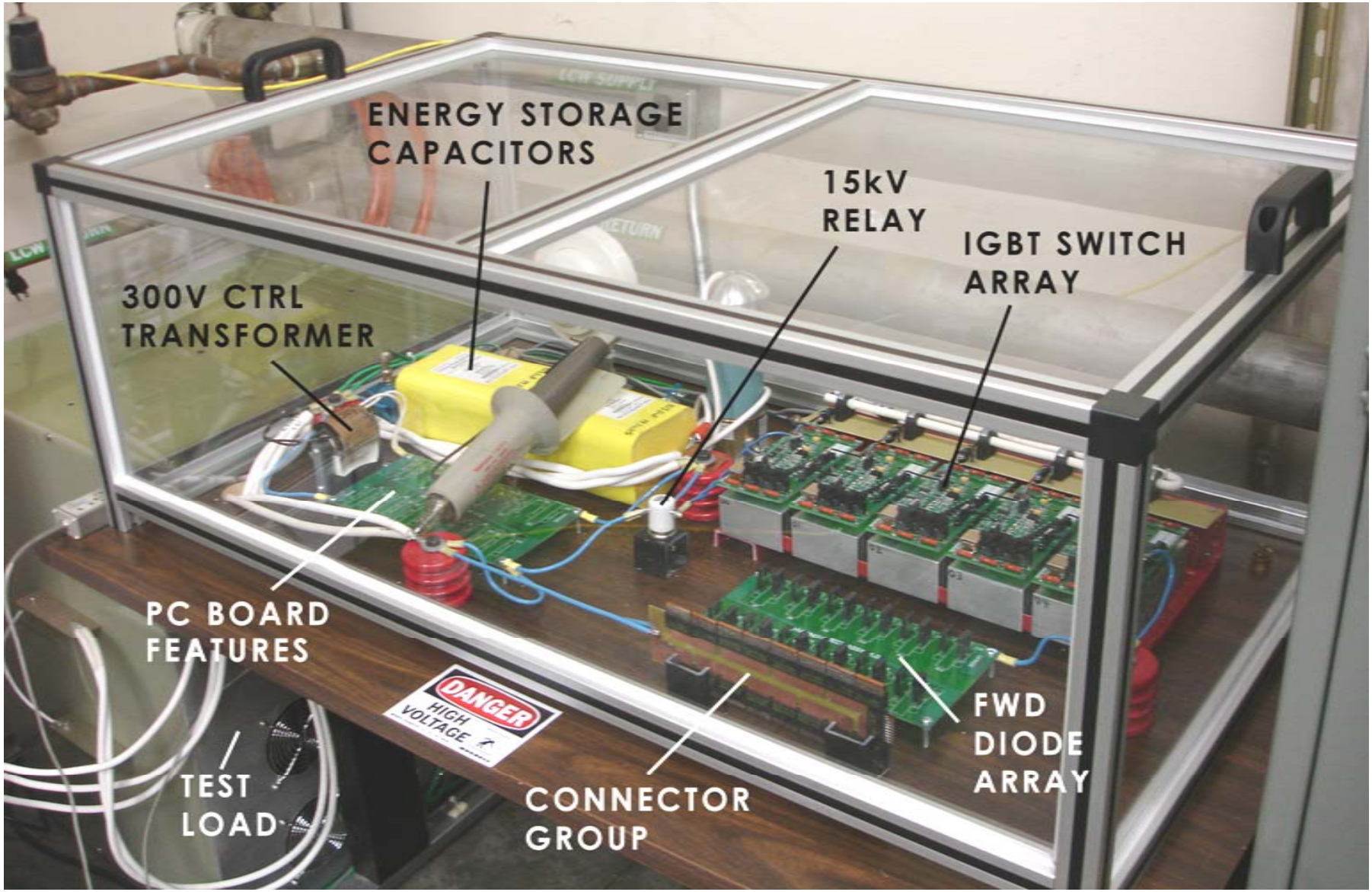

Cantilever Backbone

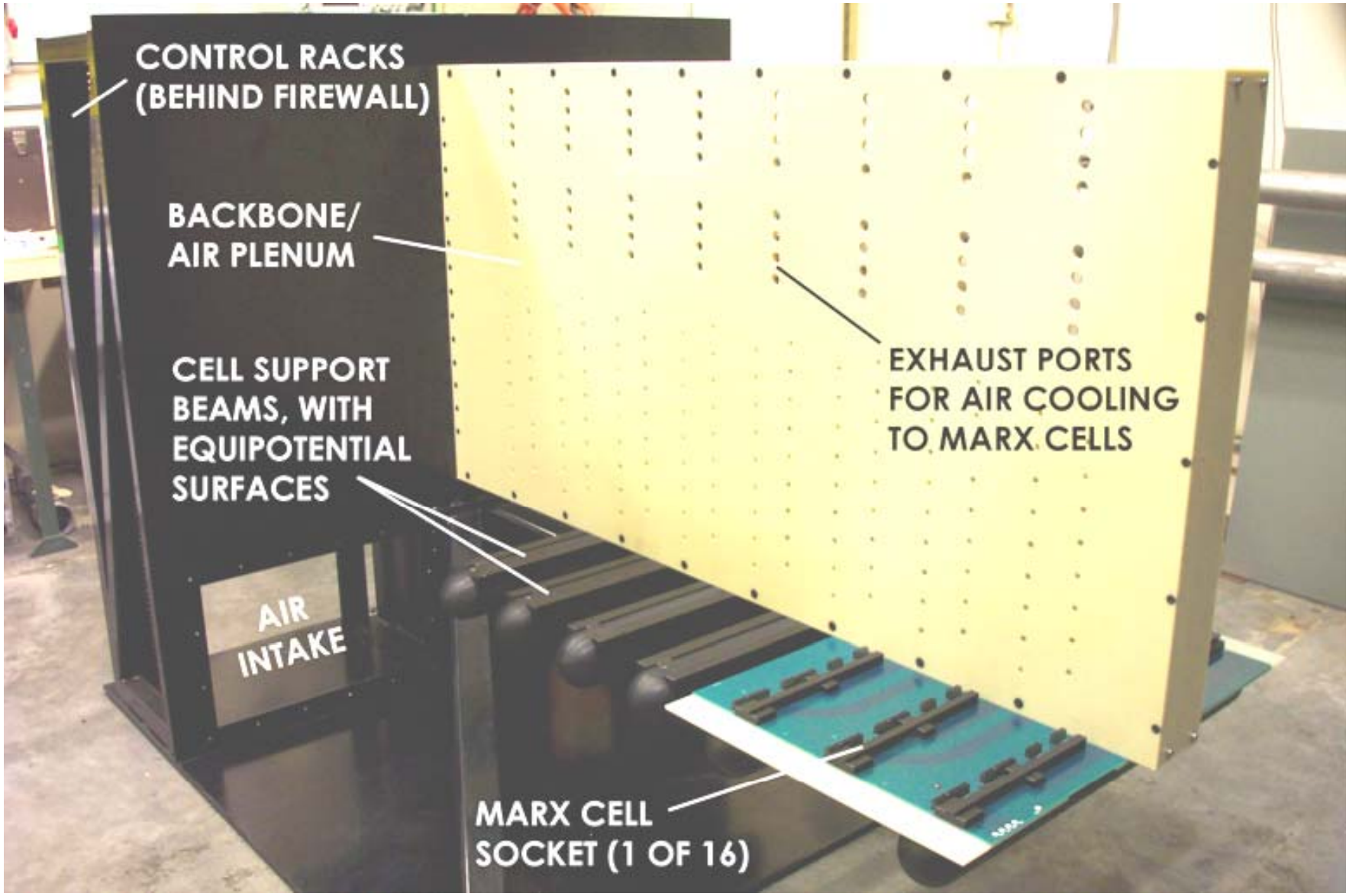

6. Vernier Cells

- Main Vernier Cells
  - Four cells programmed to correct for up to 30% droop of main waveform
  - Equivalent in action to "Bouncer" circuit of BCD
  - Leaves +/- 0.5% short ramps across waveform
  - Needs special timing program, under design
  - *Will not be implemented in first power tests*
- Second Order Vernier Corrector
  - Single rackmount unit at bottom of stack to correct small ramps, in effect programmable D/A Converter
  - Timing derived from Main Vernier timing
  - Designed by LLNL; first prototype under construction
  - *Will not be implemented in first power tests*

MARX Prototype

120kV Output – 120 µsec width

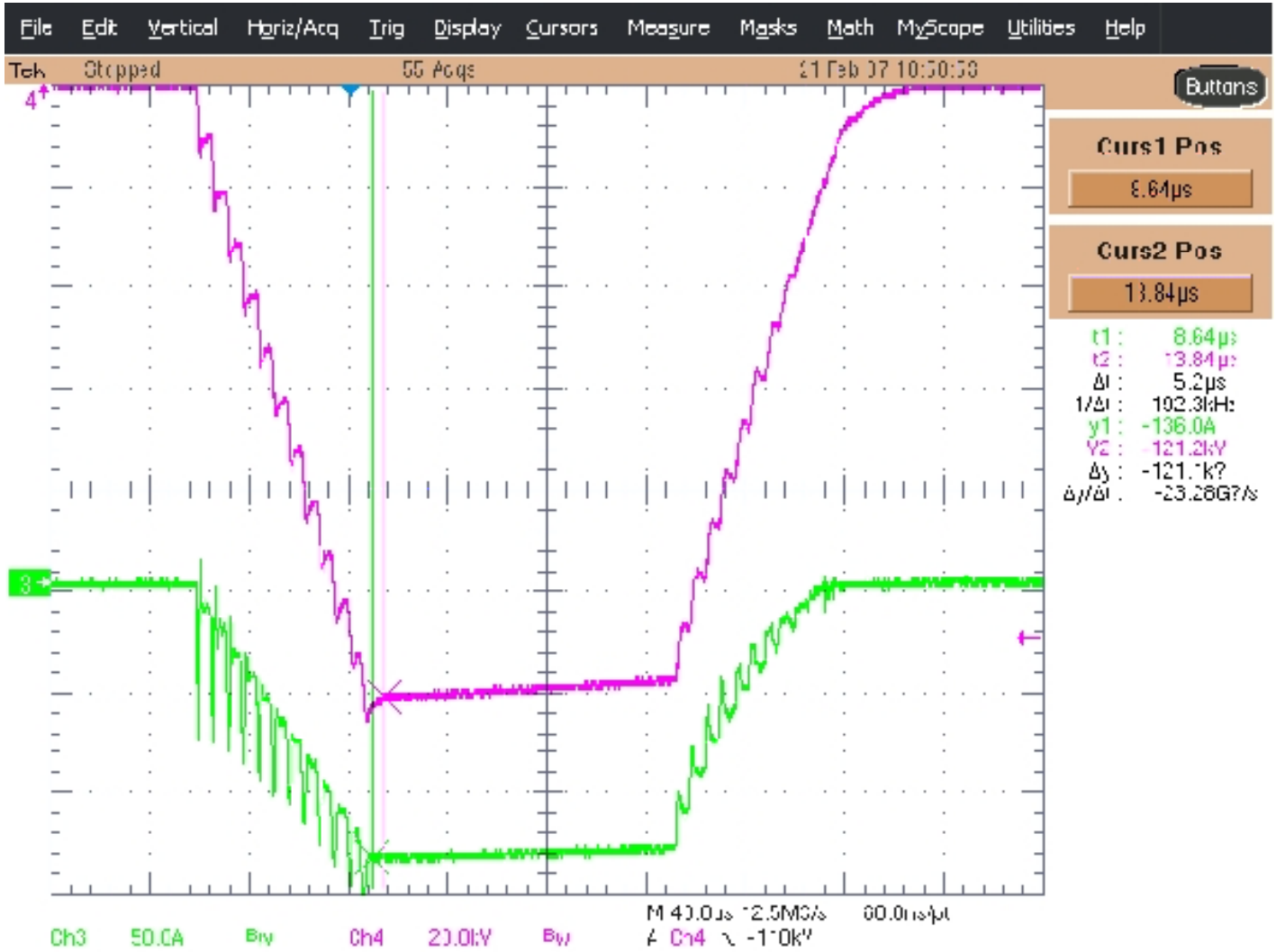

100kV Output – 1400 µsec, Leveled

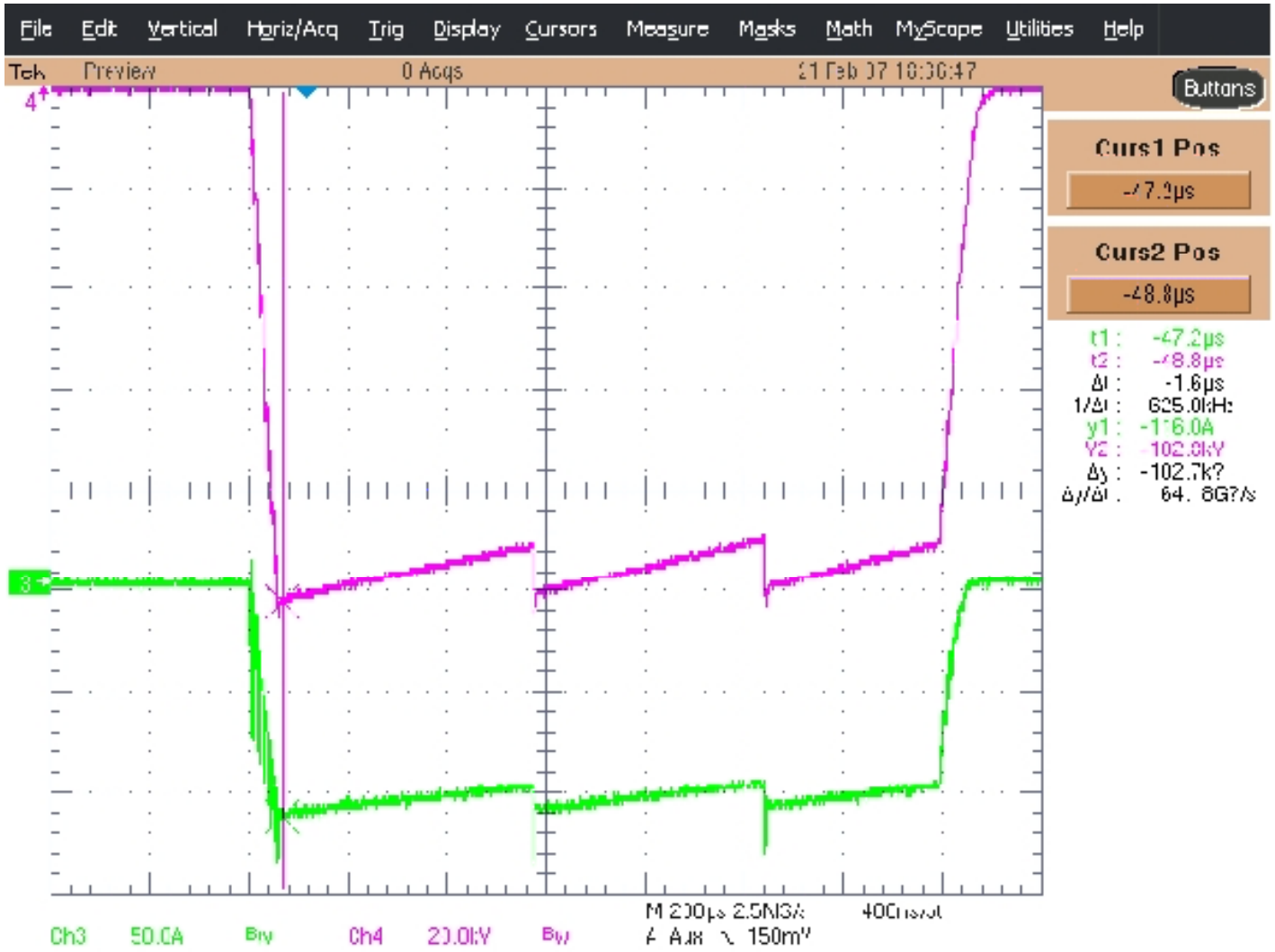

150 kW Air-Cooled load

Disc Resistor & Cooling Fin Stacks

MARX Plan for 2007

- Currently improving protection circuits and matching IGBTs (run at low rep rate).
- Perform short power test (100 hrs) with full charger supply, load.
- In parallel complete Vernier, Buck Regulator Boards.
- Complete full power 2000 h test with resistive load.
- Install tested unit in air-water cooled enclosure.
- Move to End Station B to power Toshiba 10 MW Multi-Beam Klystron.
- Begin work on DFM version soon (also DTI will build a Marx Modulator by next Summer through SBIR funding).

Stangenes Marx Generator

(for NATO Radar System)

Produces 90 kV, 50A, 100 µsec Pulses

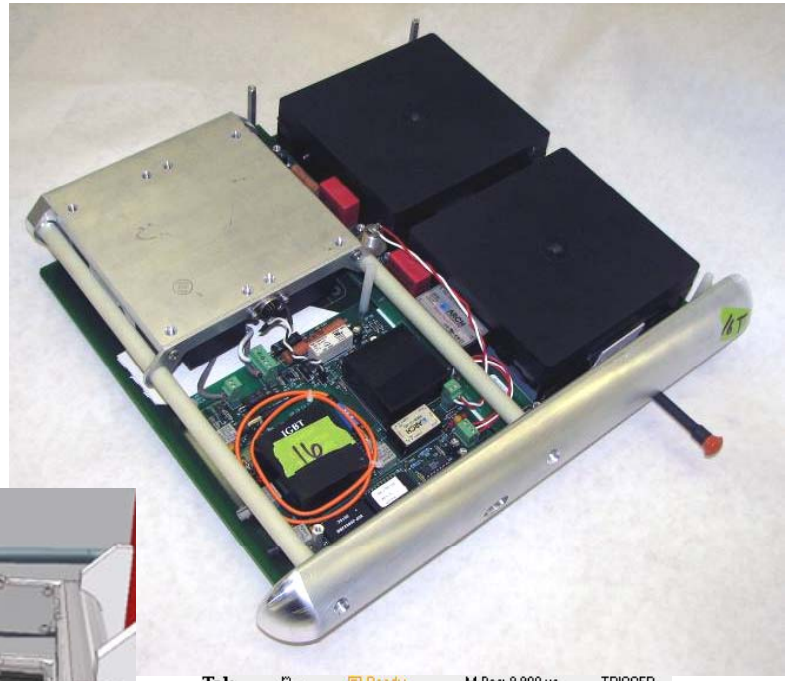

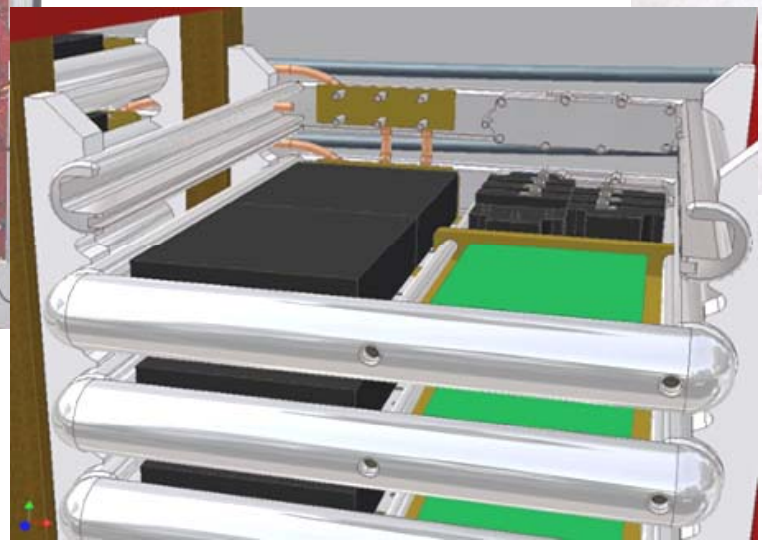

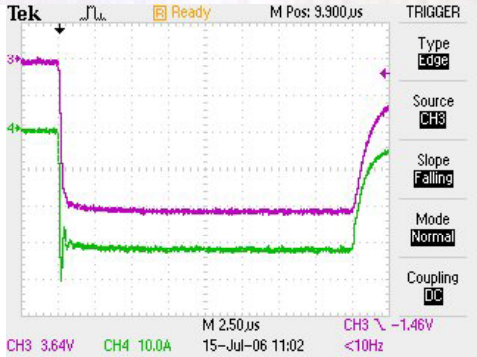

Klystrons

Baseline: 10 MW Multi-Beam Klystrons (MBKs) with ~ 65% Efficiency: Being Developed by Three Tube Companies in Collaboration with DESY

Thales

CPI

Toshiba

Status of the 10 MW MBKs

- Thales: Six tubes produced – some have cavity oscillation problems at full power that can be tuned out – next version has fixes for this, to be tested in June.
- CPI: One tube built and factory tested to 10 MW at short pulse. At DESY with full pulse testing, only achieved 48-55% efficiency with long pulses.
- Toshiba: One tube built and tested at DESY where it has run at full power for 750 hours with good efficiency (66%).
- These are vertically mounted tubes – all three companies are currently building horizontal versions for XFEL (also needed for ILC).
- First 10 MW MBK to be acquired by SLAC/KEK this year for long-term testing.

2006 Test of Toshiba MBK

- June 8: Start installation
- June 14: Adjust filament setting
- June 16: Modify tube socket
- June 19: Run at 115kV, 134 A, 1.7mS, 10 Hz
- June 20: Achieve 10 MW, 1.5 ms rf pulses at 10 Hz (150 kW average output power)
- July 4-5: Test for 24 hours
- October 12: Removed from test stand
- Total time of operation on the test stand = 750 hours, 80 % at full power

Toshiba MBK Test Data

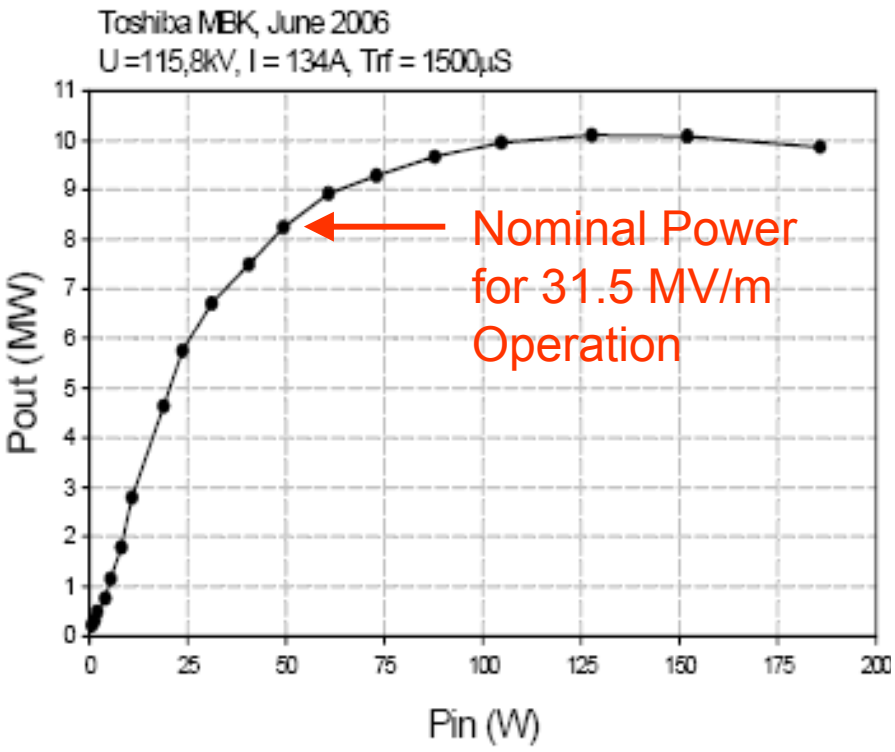

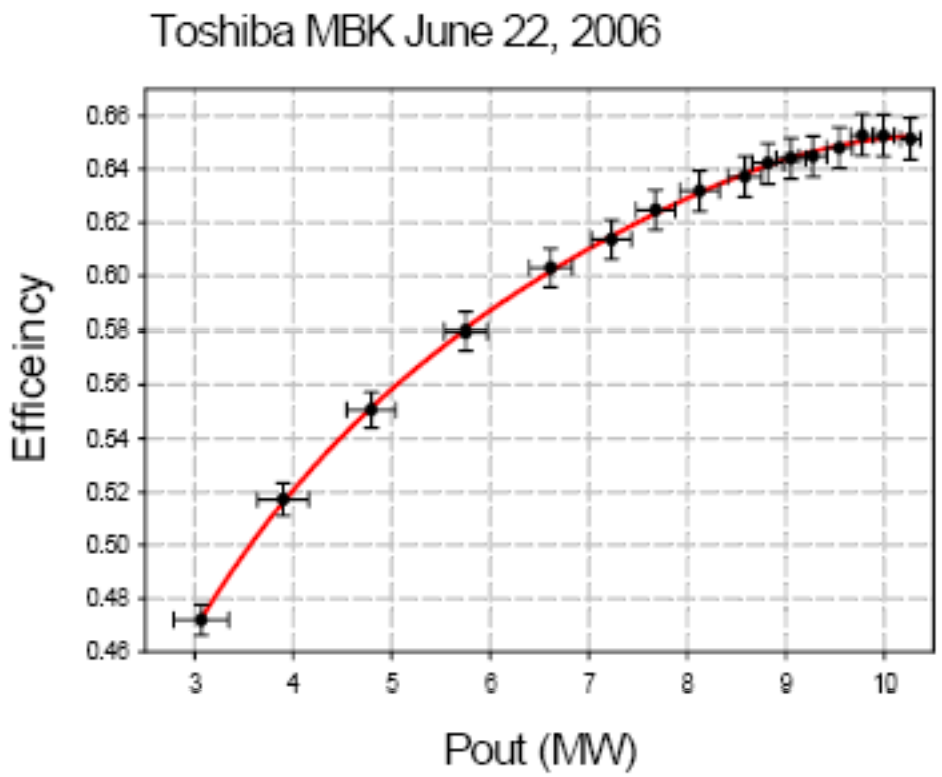

Horizontal MBK for XFEL

Expect the first horizontal MBK this Fall. DESY is currently working with three companies to design the klystron interface to the transformer tank

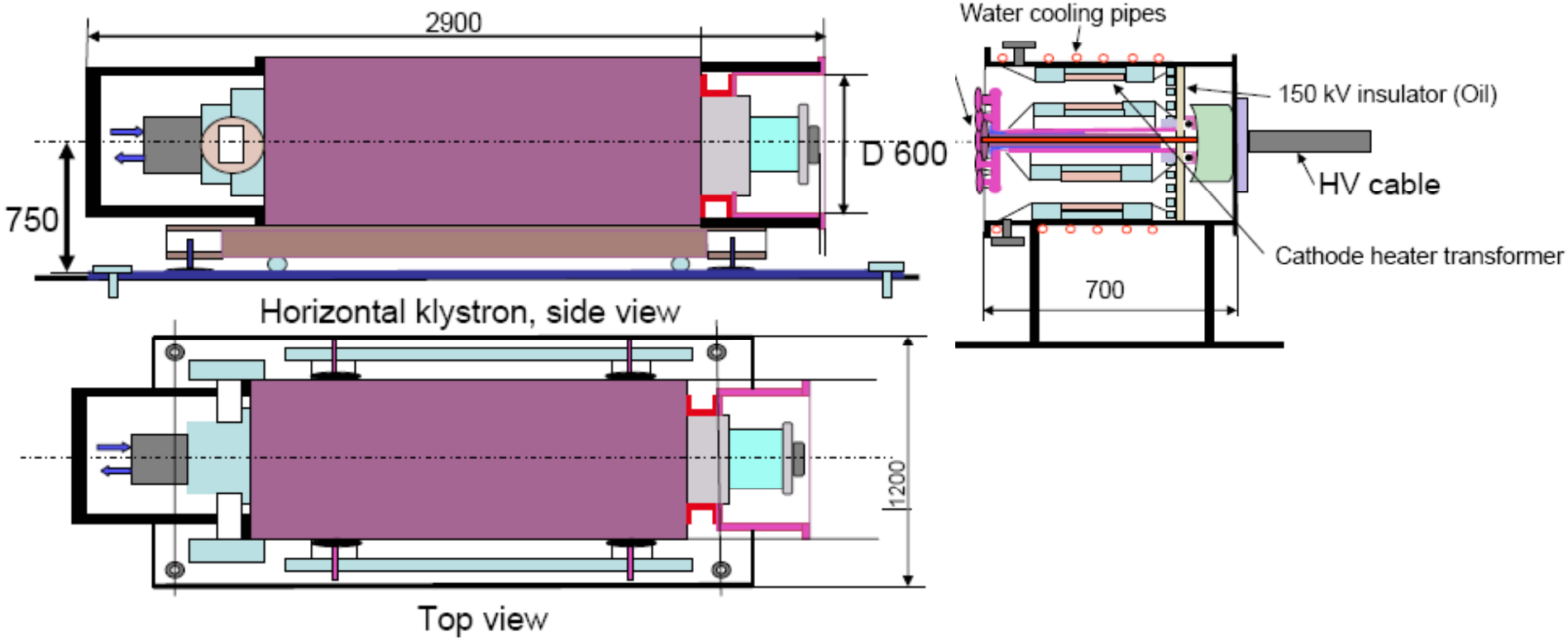

Vladimir Vogel

XFEL Klystron Program

- New Thales tube (SN5) with modifications to be tested in June.
- Preparing for horizontal MBK test using existing (ABB) pulse transformer.
- Test HV cable connection.
- Continue investigation of phase, output power and perveance stability of MBK.
- Study breakdown rate of rf components and klystron windows as a function of waveguide pressure.
- Develop fast klystron protection against RF breakdown.

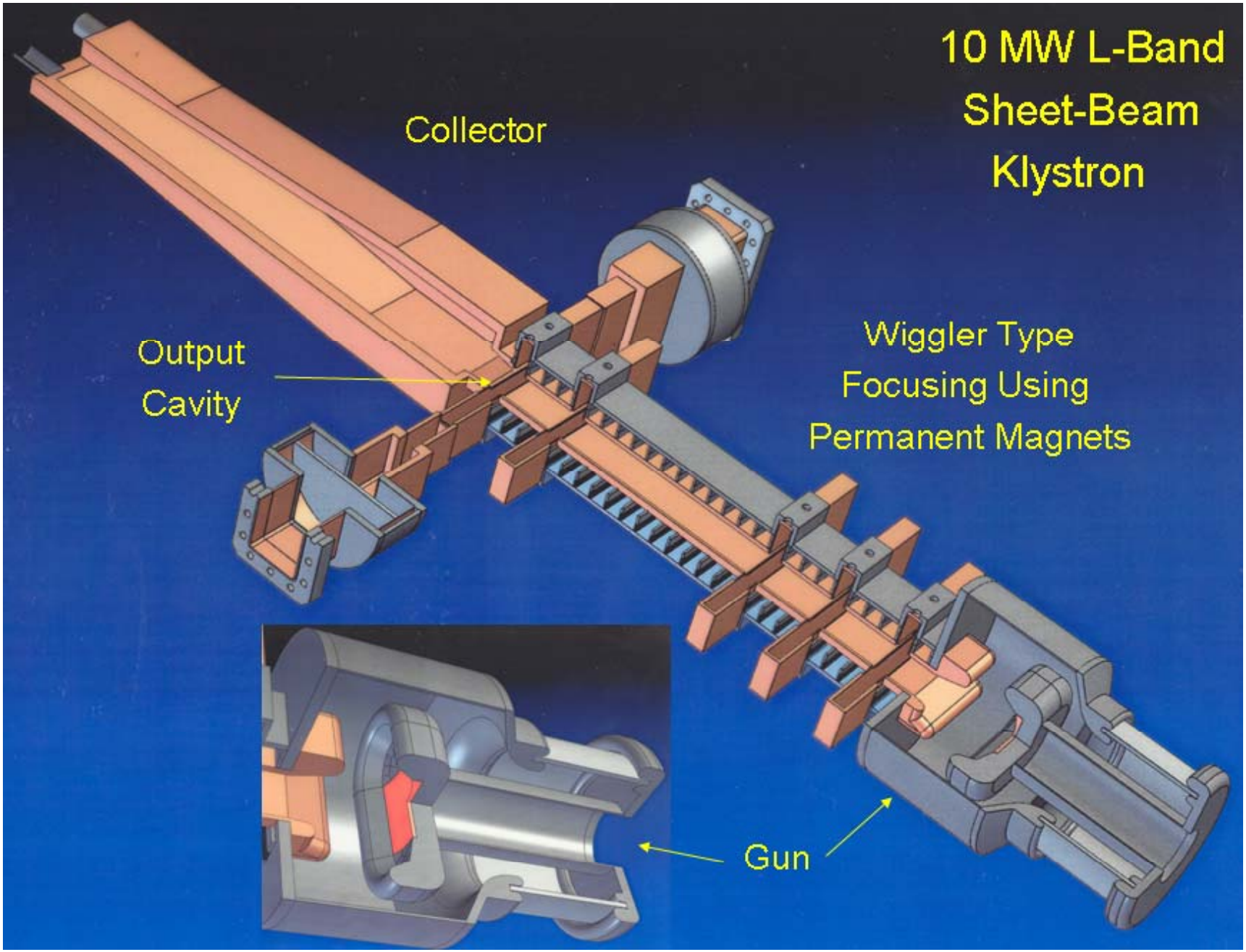
10 MW L-Band
Sheet-Beam
Klystron
Collector
Output
Cavity
Wiggler Type
Focusing Using
Permanent Magnets
Gun

SLAC SBK Design Group

- Erik Jongewaard (Program Manager/ME)
  - Magnet structure and RF circuit/drift tunnel design
- Daryl Sprehn (Chief EE)
  - Magic and AJdisk RF sims, 3D RF sims, egun sims
- Andy Haase (ME)
  - Couplers, Window and beam diagnostics design
- Rich Schumacher (ME)
  - Anode and device interface (supports, tank, etc.) design
- David Martin (ME)
  - Global design coord, egun and collector design
- Alex Burke (EE)
  - Michelle egun sims, Magnet magnetics sims
- Aaron Jensen (EE)
  - FLUKA beam interaction sims, 3D RF sims

Beam Transport and RF

The elliptical beam is focused in a periodic permanent magnet stack that is interspersed with rf cavities

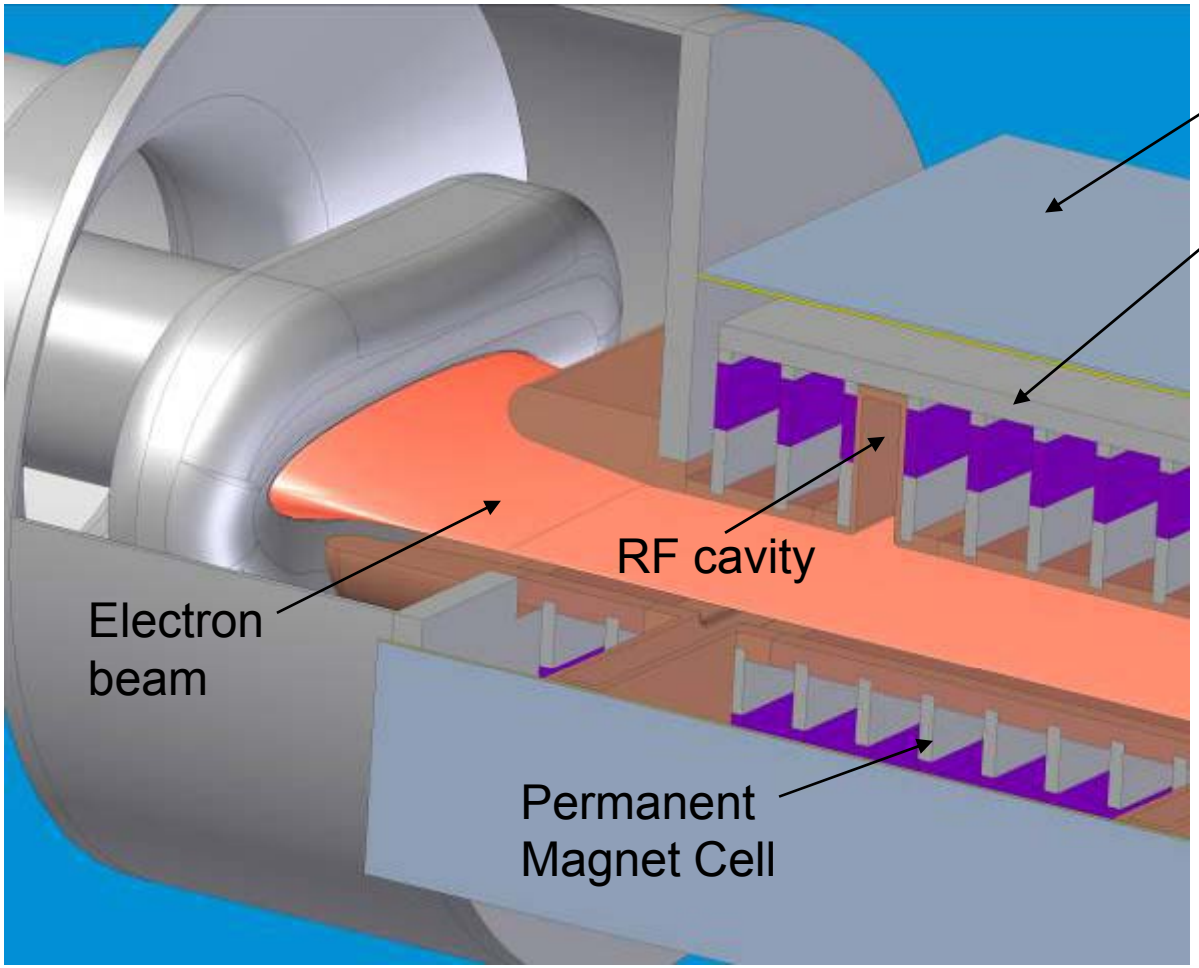

Lead shielding

Magnetically shielded from outside world

Have done:

3D Gun simulations of a 130 A, 40:1 aspect ratio elliptical beam traversing 30 period structures.

3D PIC Code simulations of rf interaction with the beam.

SBK Simulations

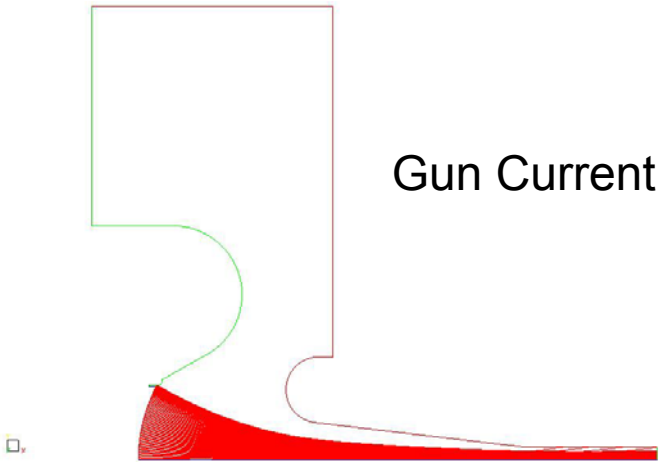

Gun Current

RF Cavities

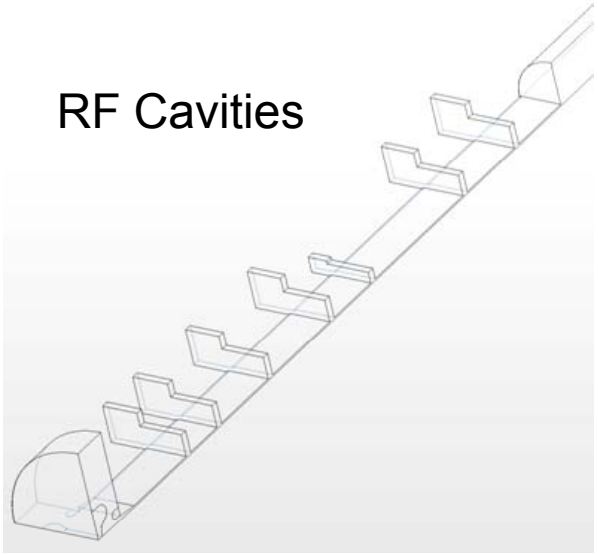

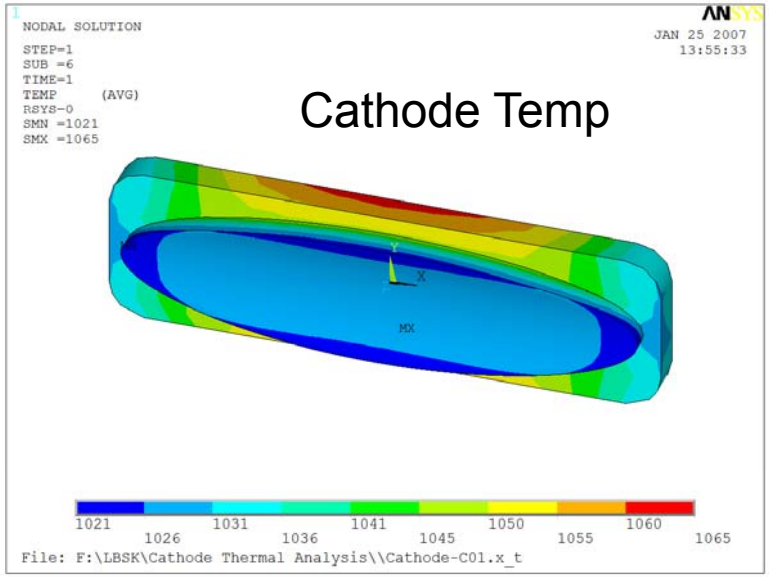

Cathode Temp

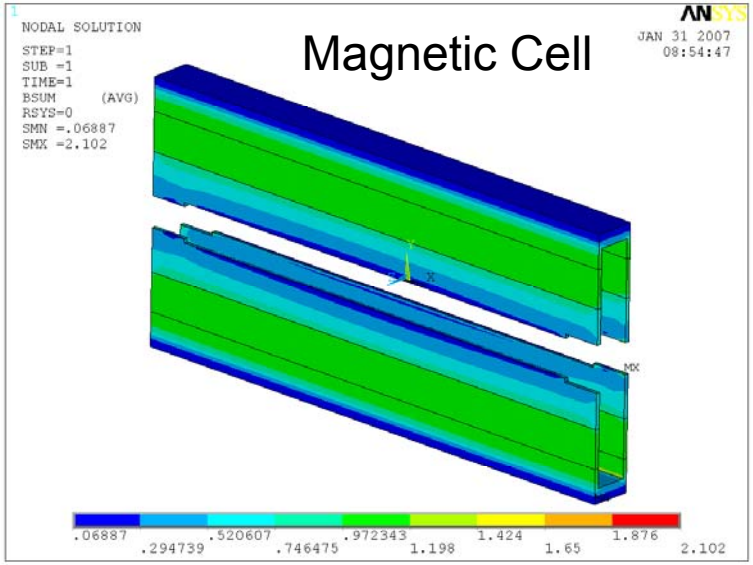

Magnetic Cell

Sheet Beam Program

- Build beam tester and klystron by Summer 2008
- The beam tester will validate 3-D beam transport simulations and allow a more rapid turnaround for electron gun changes
- The klystron will be developed in parallel with little feedback from the beam tester. A rebuild of the klystron can incorporate design changes motivated by the beam tester

RF Distribution Development

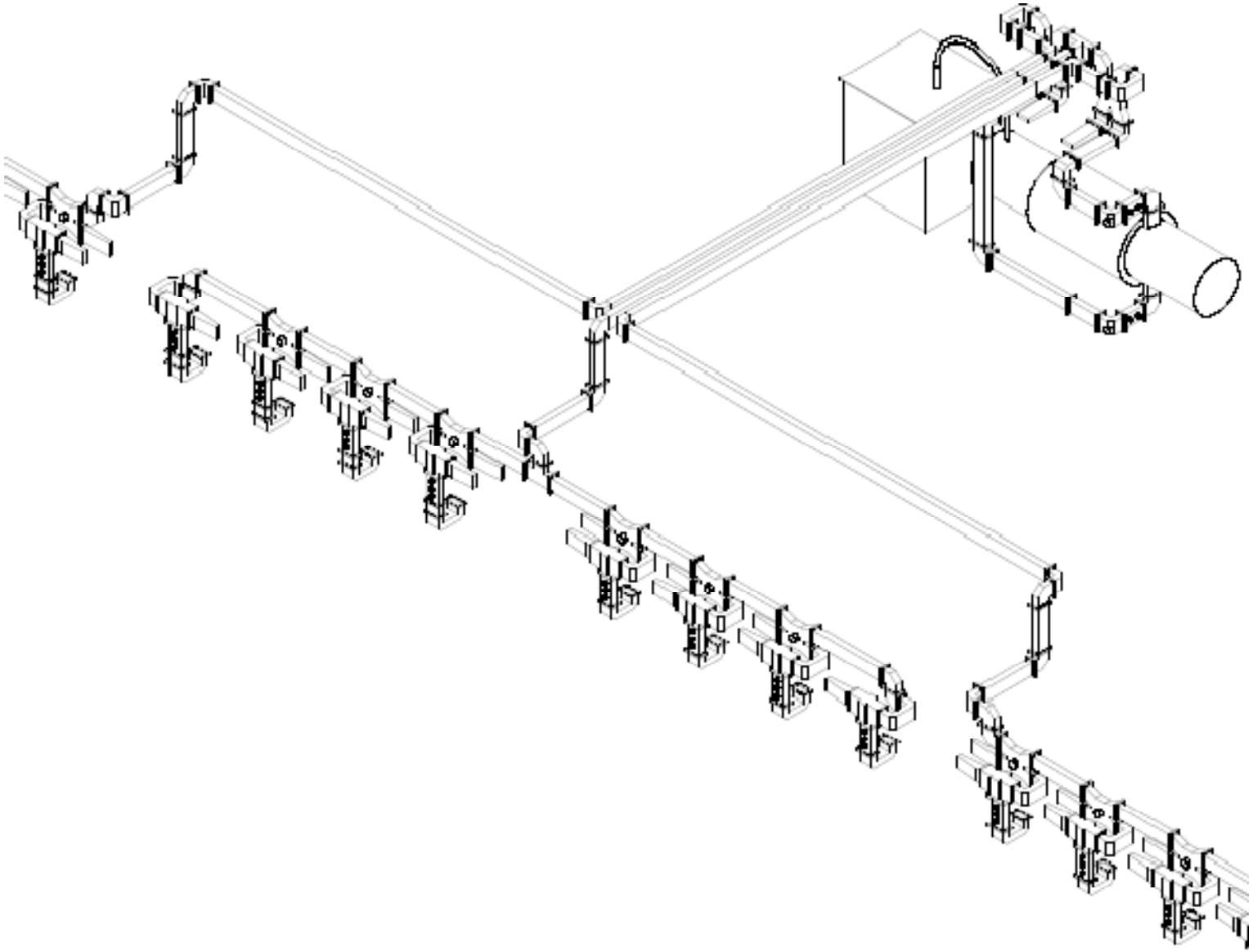

ILC RF Distribution Math

(for 33 MV/m Max Operation)

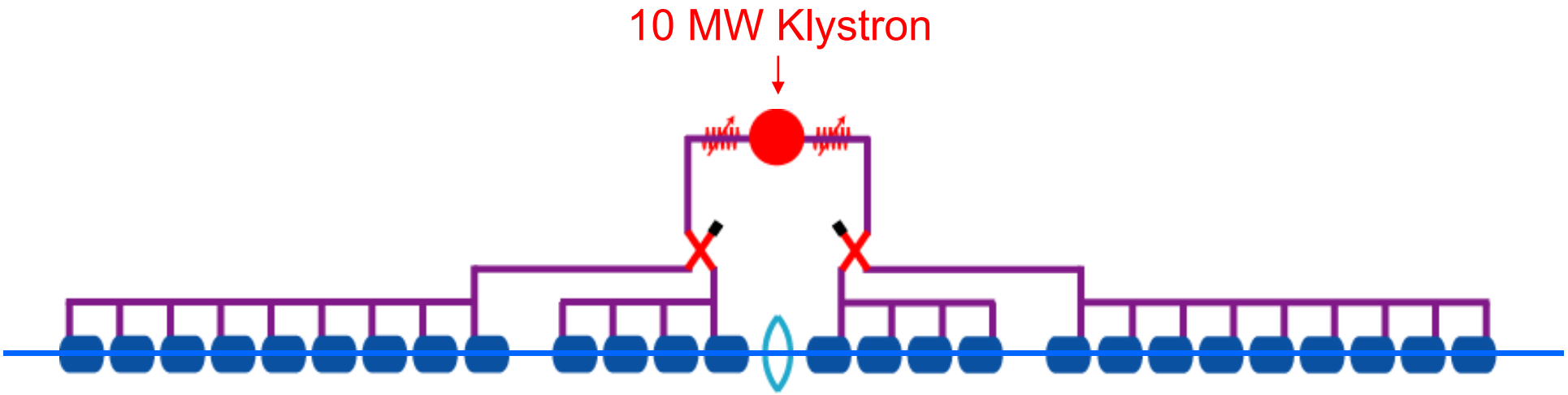

33 MV/m * 9.0 mA * 1.038 m = 308 kW (Cavity Input Power)

× 26 Cavities

× 1/.93 (Distribution Losses)

× 1/.86 (LLRF Tuning Overhead)

= 10.0 MW

XFEL RF Distribution System

Switched from a TTF-Like (3D) System

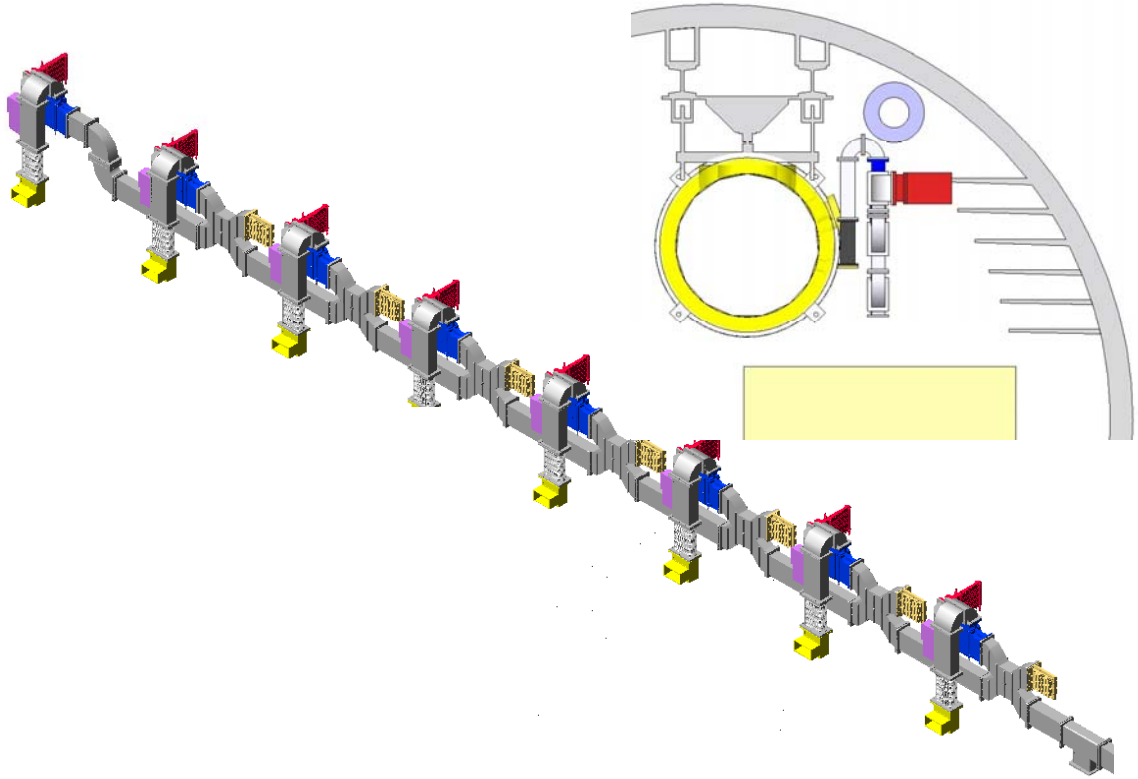

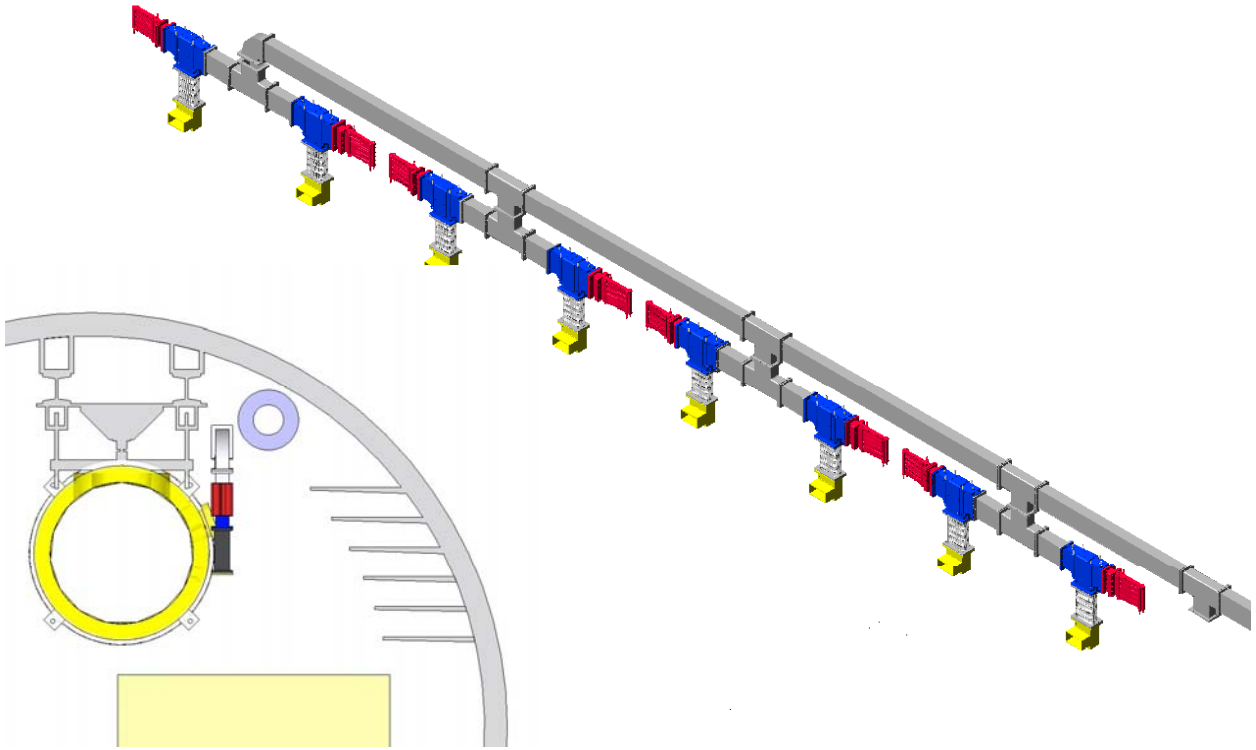

To a Tree-Like (2D) System

Replaced 3-Stub Tuner with Phase Shifter

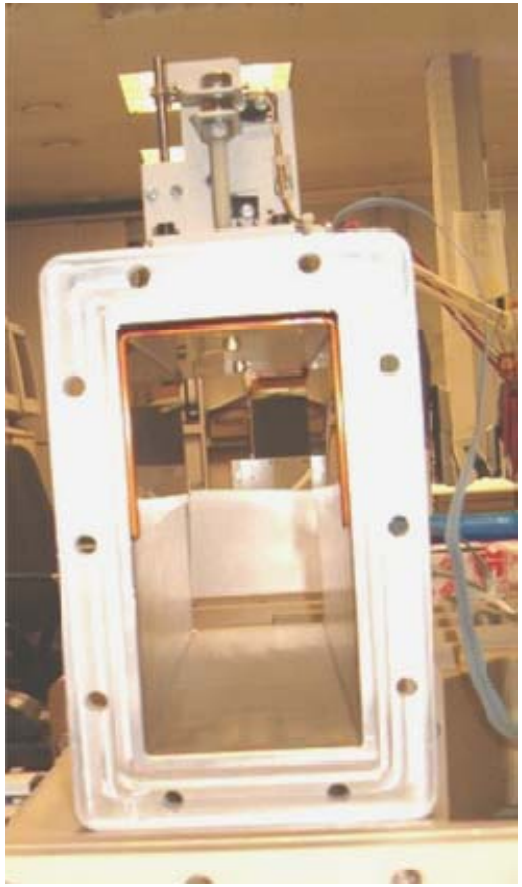

Feed Cavities In Pairs

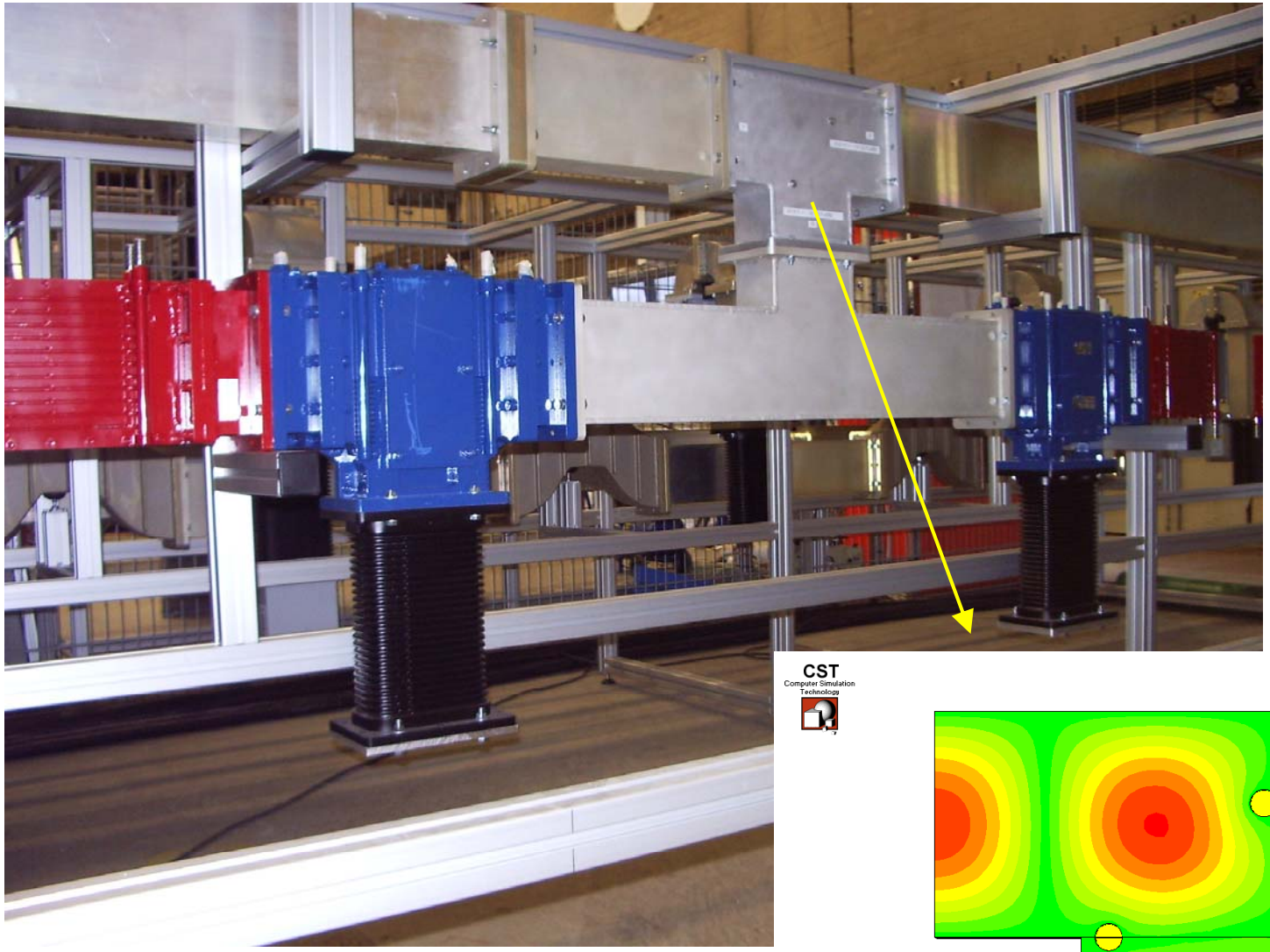

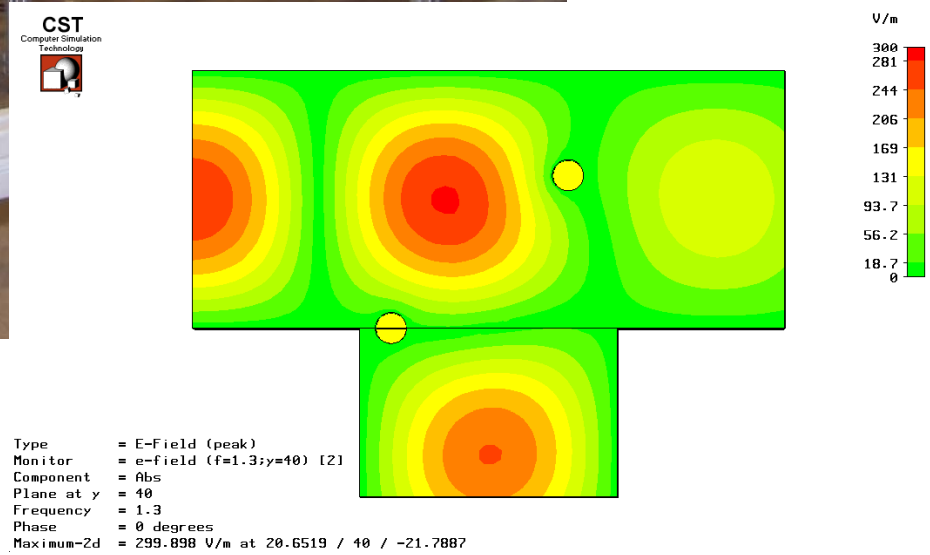

HELMHOLTZ GEMEINSCHAFT

DESY

V. Katalev

Adjustability

With customizable (2 post) asymmetric shunt tees, have a tunable waveguide system that eliminates the "weak cavity" limit in the cryomodules

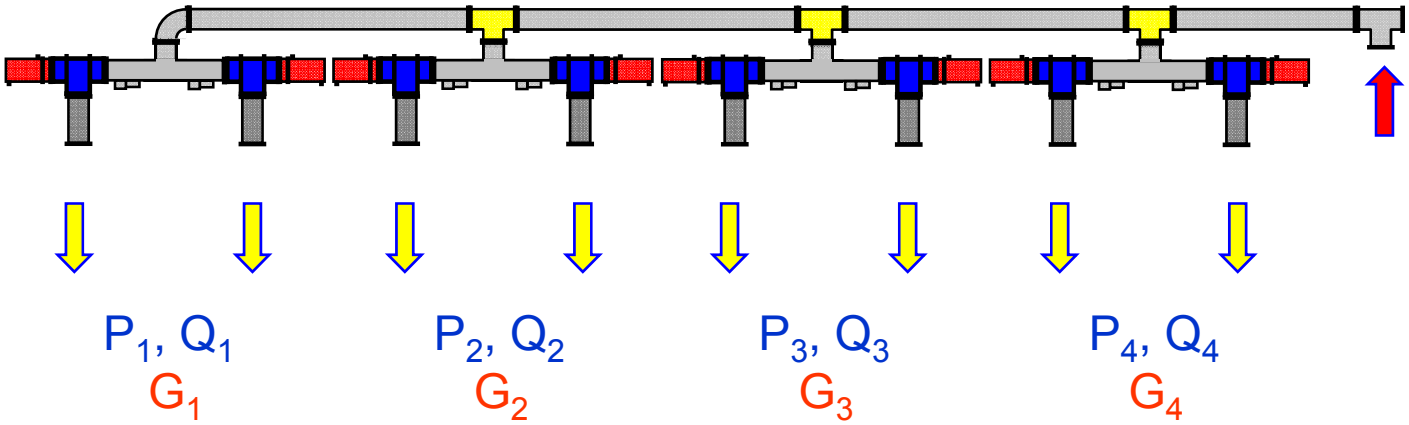

Adjust Input Power (P) and Cavity External Q to optimize for Gradient (G)

At SLAC, Developing Variable Tap-Offs Using Mode Rotation

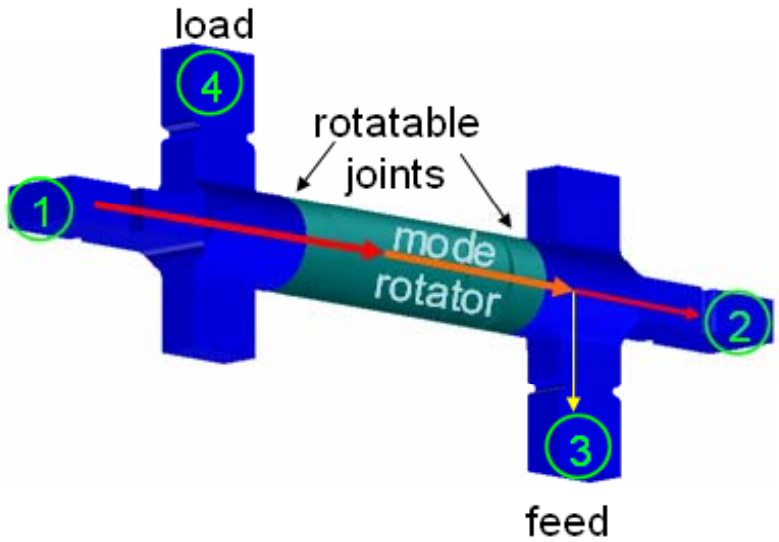

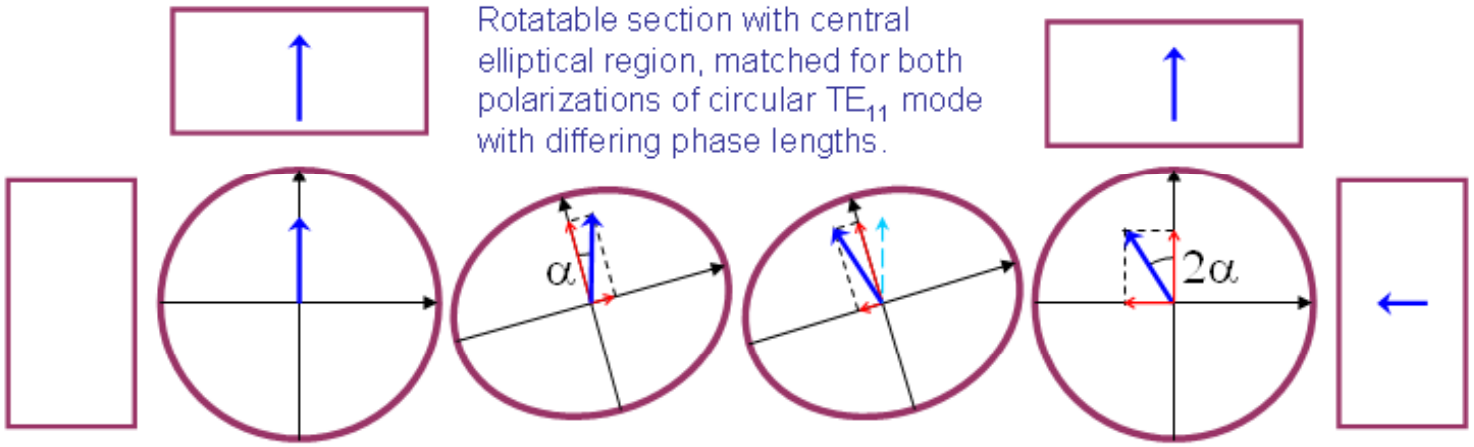

C. Nantista

RF Distribution System without Circulators but with Variable Tap-offs (VTOs)

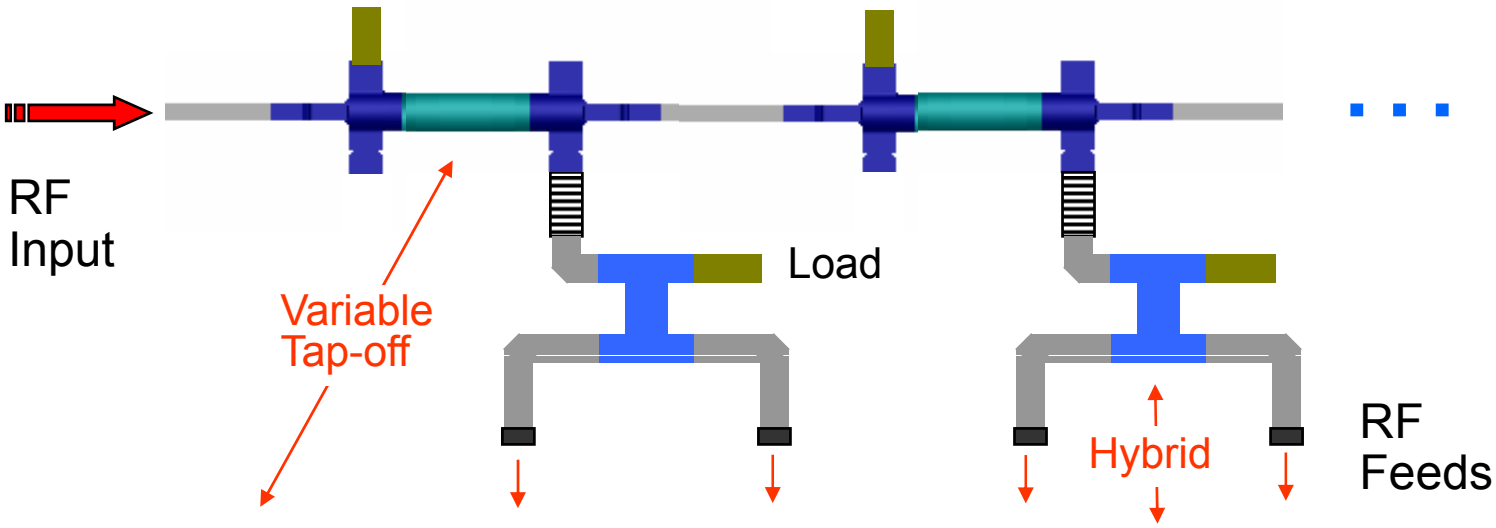

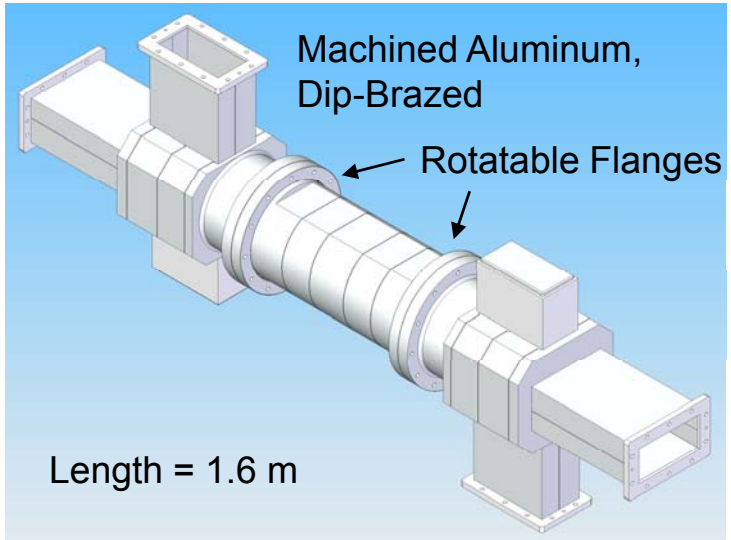

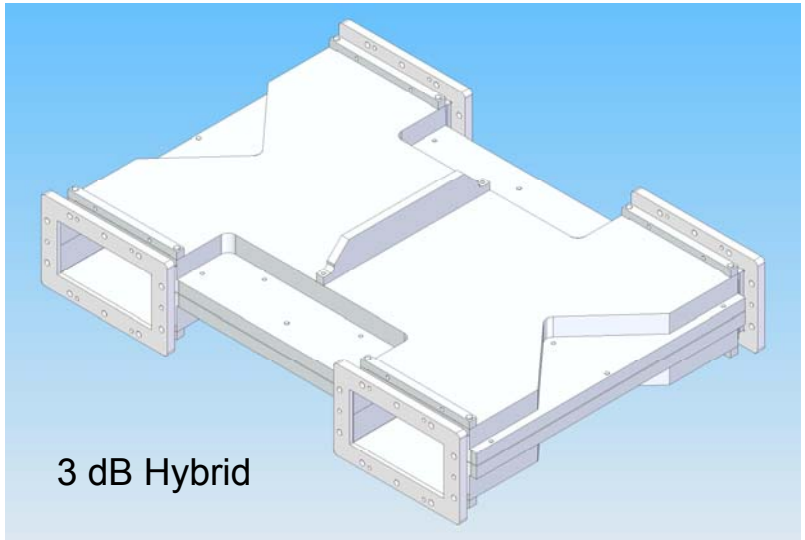

SLAC is building VTOs and Hybrids and acquiring parts (including circulators) to assemble an rf distribution system for the first FNAL cryomodule

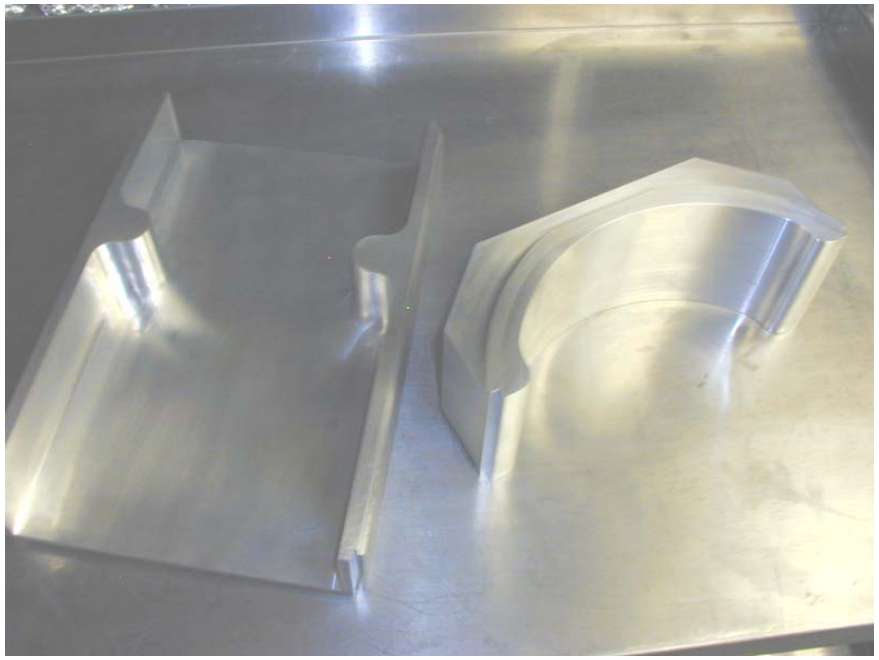

Variable Tap-Off Low Power Test

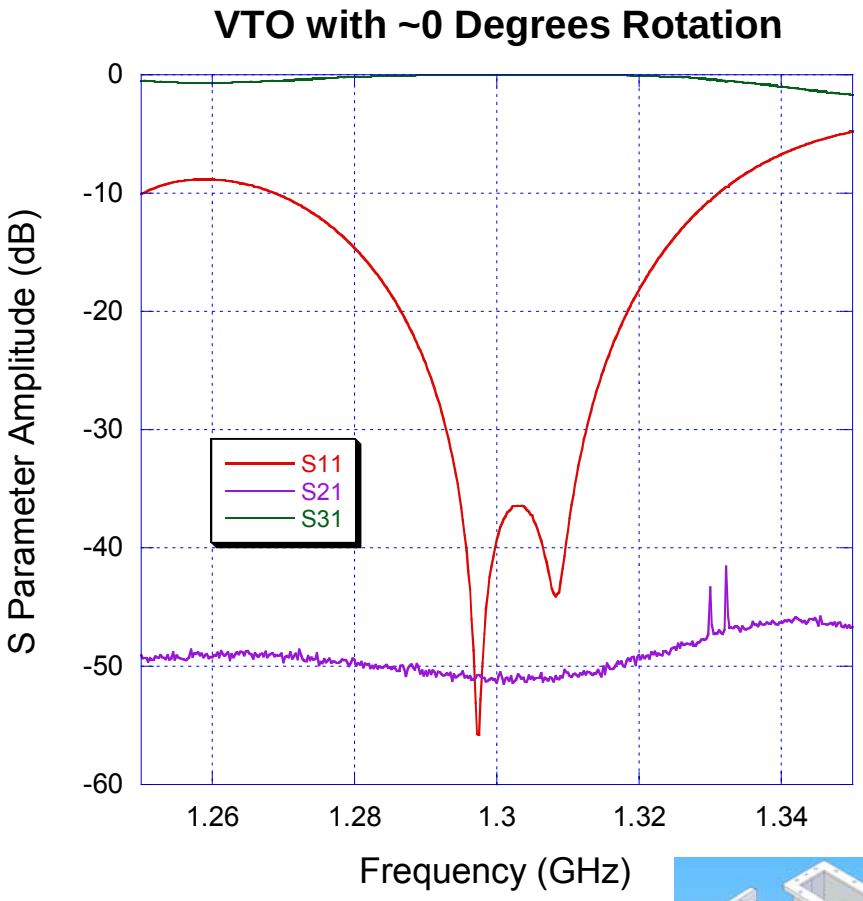

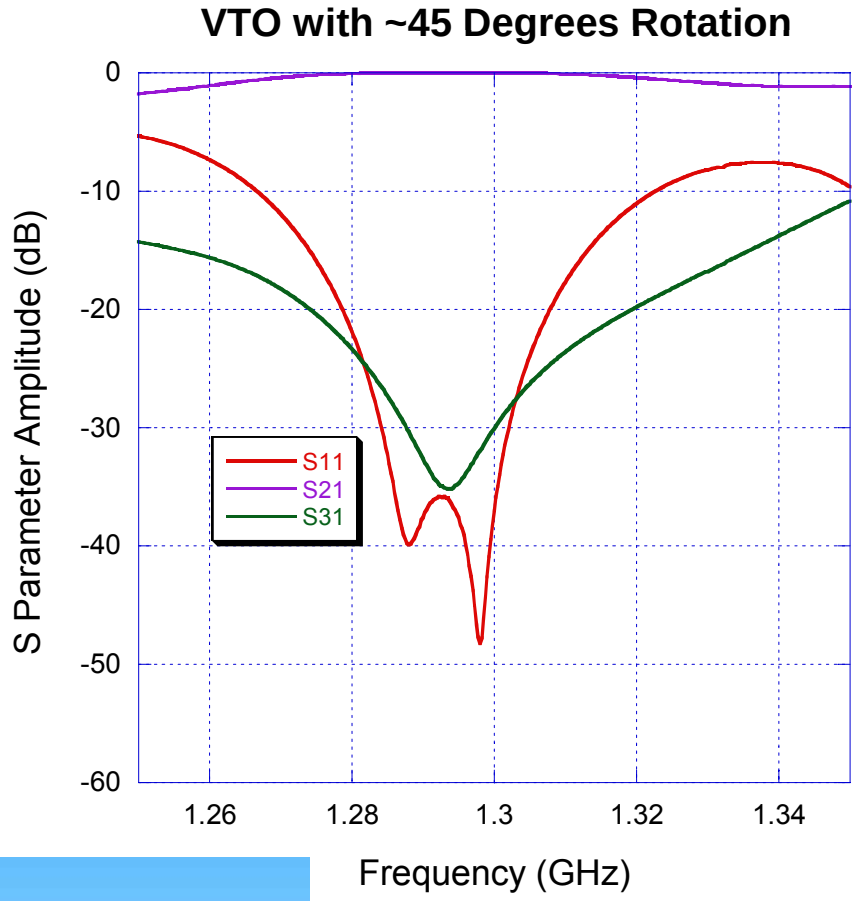

S_{11} = -39.3 dB
S_{21} = -51.4 dB
S_{31} = -0.034 dB

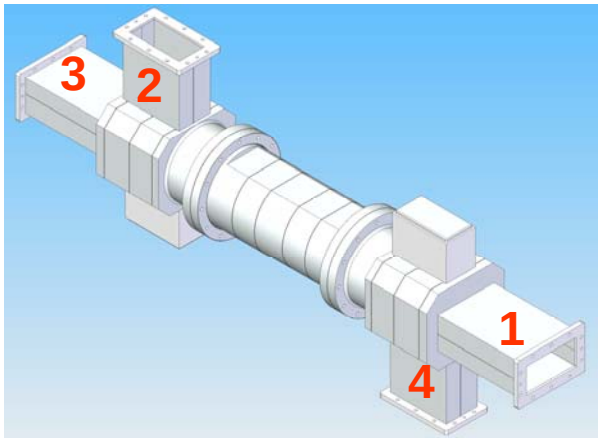

S_{11} = -37.0 dB
S_{21} = -0.030 dB
S_{31} = -30.1 dB

Gradient Optimization

Consider uniform distribution of gradient limits $(G_{lim})_i$ from 22 to 34 MV/m in a 26 cavity rf unit - adjust cavity Q's and/not cavity power (P) to maximize overall gradient while keeping gradient uniform (< 1e-3 rms) during bunch train

Optimized $1-\langle G\rangle/\langle G_{lim}\rangle$; results for 100 seeds

Case	Not Sorted [%]	Sorted [%]
Individual P's and Q's (VTO and Circ)	0.0	0.0
1 *P*, individual *Q*'s (Circ but no VTO)	2.7 ± 0.4	2.7 ± 0.4
P's in pairs, *Q*'s in pairs (VTO but no Circ)	7.2 ± 1.4	0.8 ± 0.2
1 *P*, *Q*'s in pairs (no VTO, no Circ)	8.8 ± 1.3	3.3 ± 0.5
G_i set to lowest G_{lim} (no VTO, no Circ)	19.8 ± 2.0	19.8 ± 2.0

"Sorted" means cavities are arranged in pairs of nearly equal G_{lim}

The number after "±" is the rms value

Karl Bane

ILC Cost with Variable Tap-Offs (VTOs), Circulators and Large Gradient Spread

- Assume cavities produced with flat distribution of sustainable gradients (G) from 22 MV/m to 34 MV/m with <G> = 28 MV/m
- With Qeo optimized for Go = <G>, achieve flat cavity field at G with
  - Qe = Qeo * ln(2) / ln (1 + G/Go * Qeo/Qe)
  - Input Power = Po * (1/4) * (1 + G/Go * Qeo/Qe)^2 * (Qe/Qeo)
- Requires 6.8% more power on average per rf unit
- Maintain rf unit layout but increase linac length by 31.5/28 -1 = 12.5%
- At 31 MV/m, which is a +3-sigma variation in the mean gradient of a half rf unit, have same 16% tuning overhead as present design at 33 MV/m.
- Considering all changes, ILC cost increases by about 7%

Initially, the KEK Superconducting Test Facility (STF) will use mostly existing or off-the-shelf baseline rf components – same for the FNAL ILCTA@NML Facility.

STF Phase 1 Plan

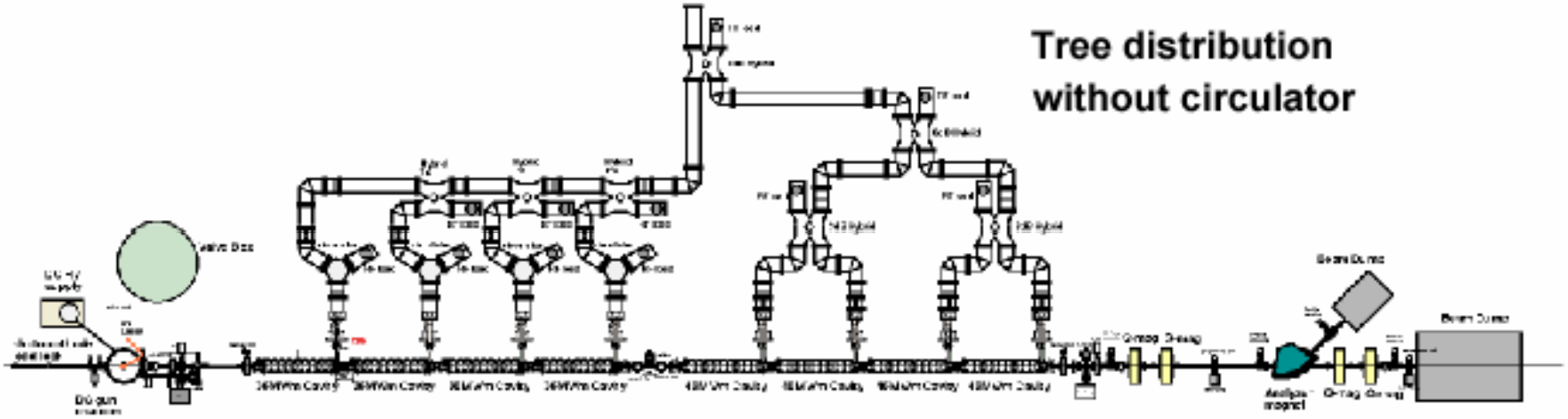

STF L-Band Source at KEK

Waveguide to Distribute Power for Coupler Testing

Pulser Unit for a Pulse Transformer Modulator

SLAC L-Band Test Stand

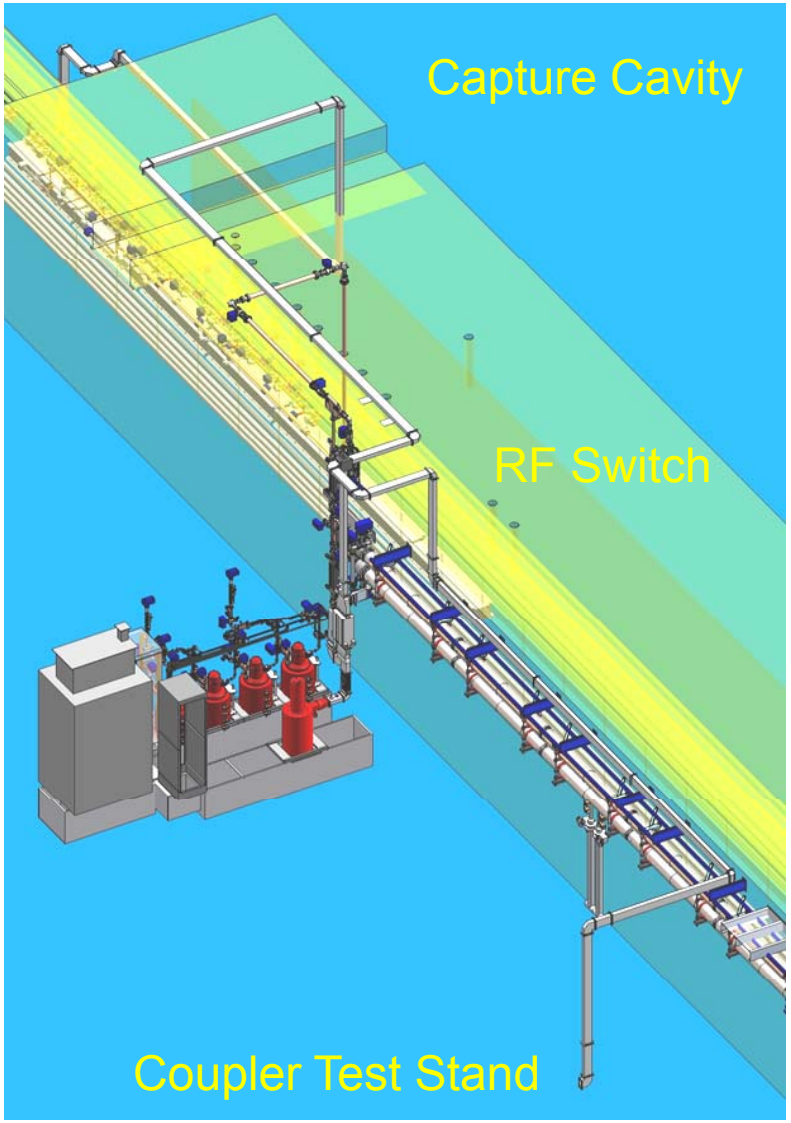

Produce 5 MW, 1.4 msec pulses at 5 Hz with a TH2104C klystron and a SNS-type modulator

Source powers a coupler test stand and a normal-conducting ILC e+ capture cavity

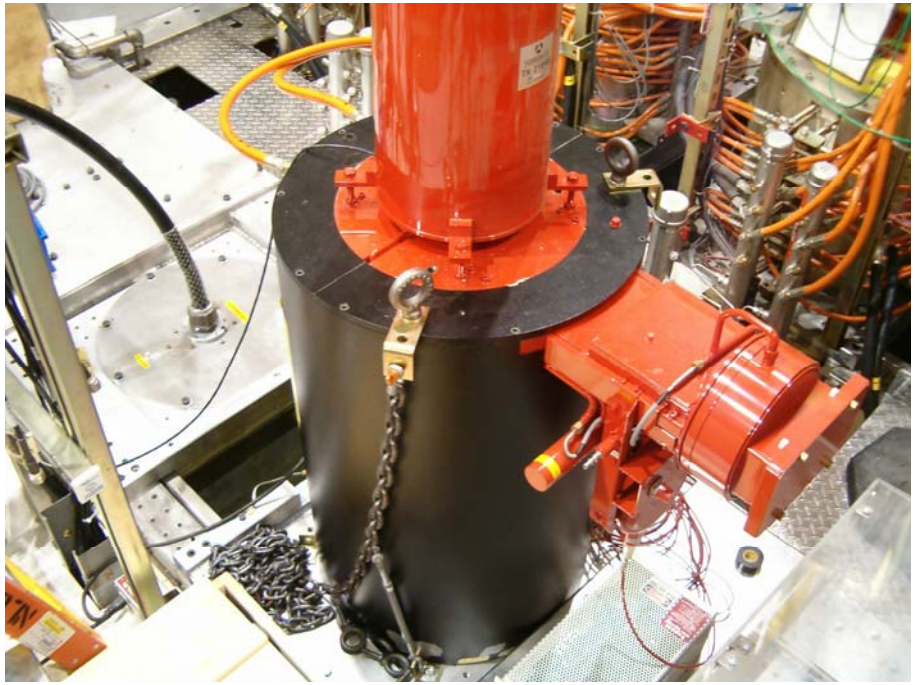

Coupler Component Test Stand

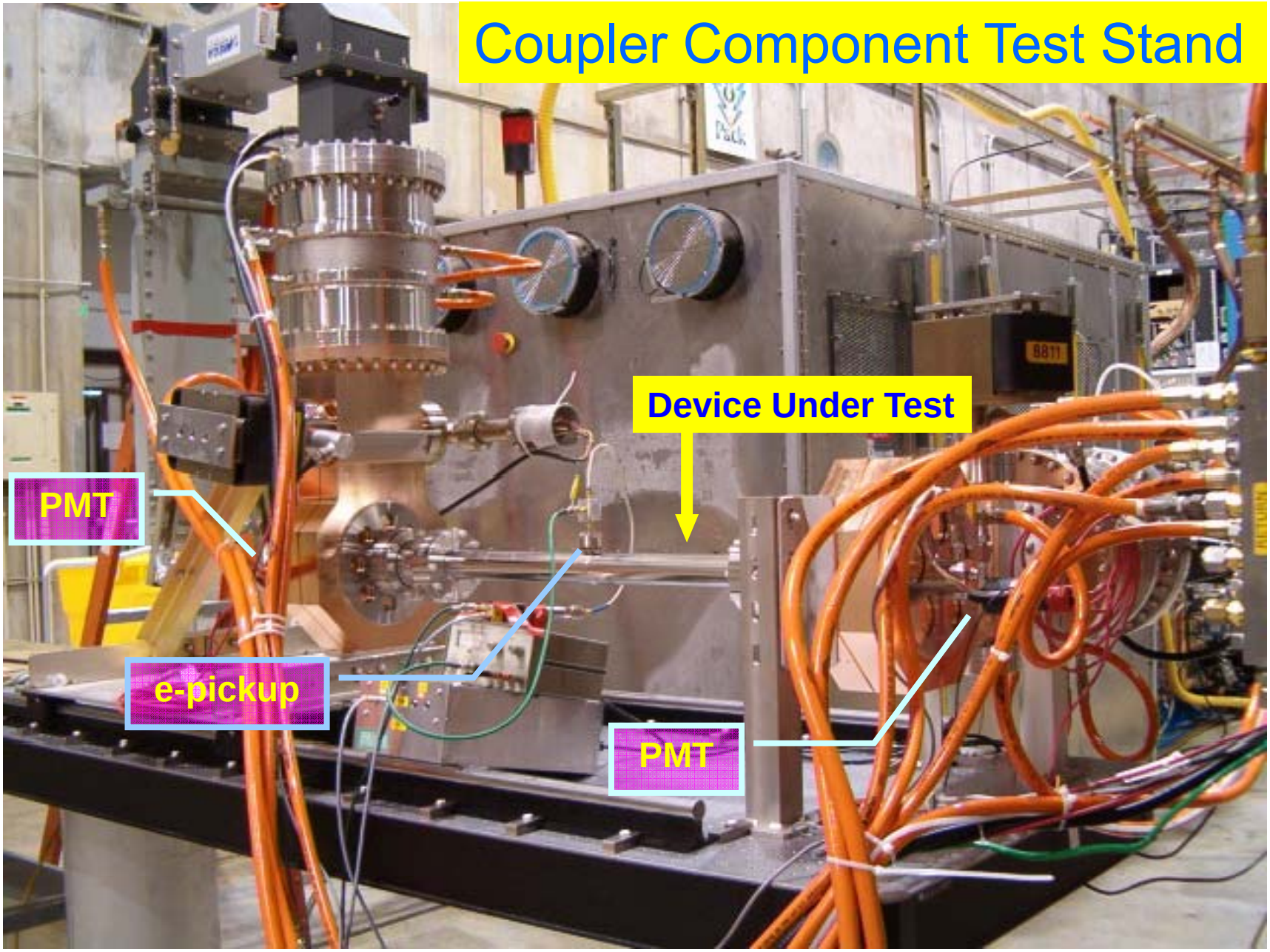

ILC Positron Capture Cavity Prototype

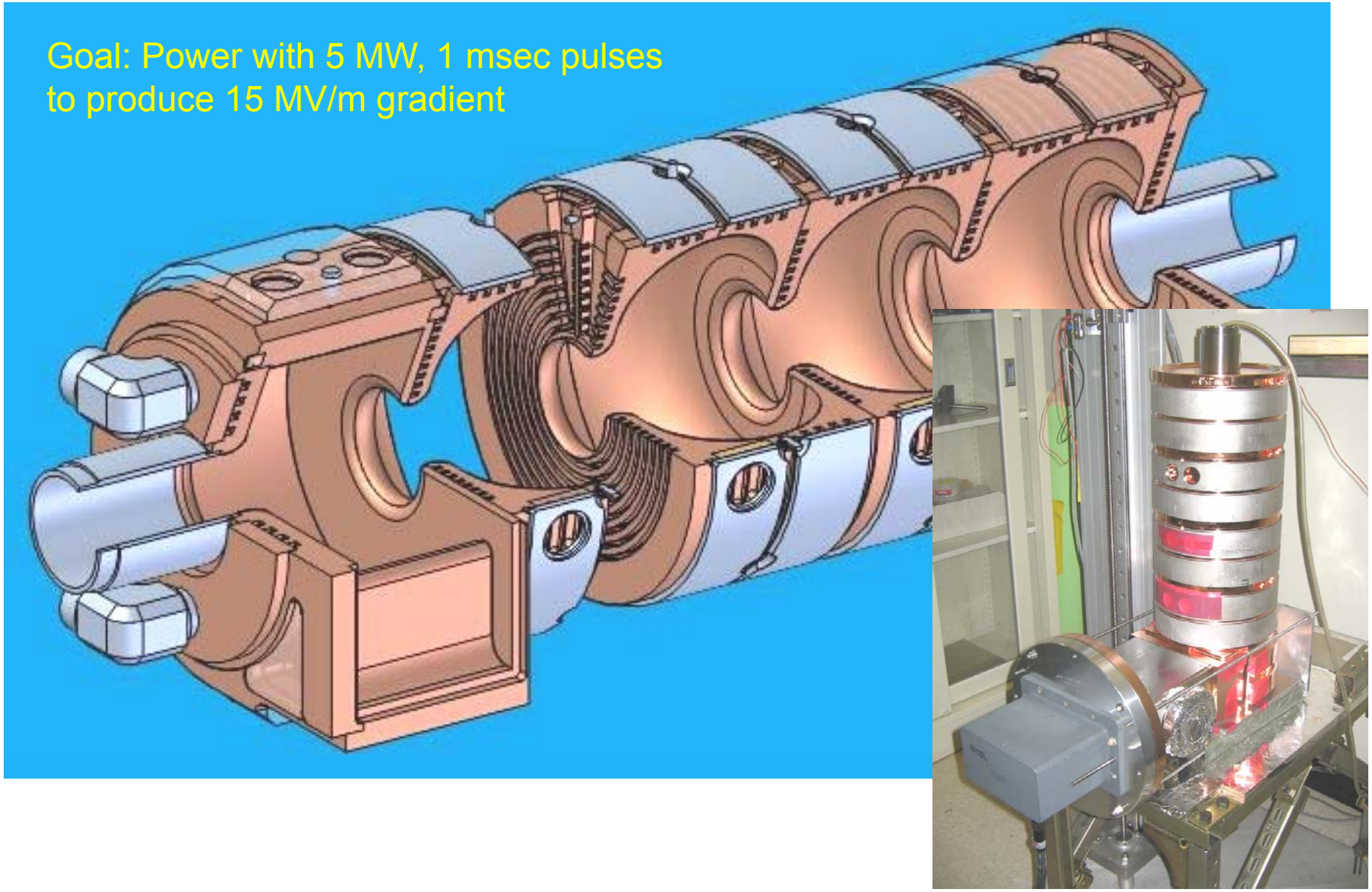

2008-09 Overarching Goals

- Demonstrate rf system performance at the level required for the EDR
  - Design approaches finalized
  - Industrial versions built
  - Reliability measured at few 10 khr level
  - Cost and path to mass production understood
  - Potential vendors identified
- Use ILC-like rf sources in ‘string tests’ to power an rf unit (3 cryomodules) at FNAL and later one at KEK

FY08-09 SLAC Deliverables

- Design-for-Manufacturability Marx (start in FY07)
- 6 Modulator Production Units
- Toshiba10 MW MBKs (purchased in FY07)
- Sheet Beam Klystron (started in FY07)
- 6 Klystron Production Units
- 5 RF Distribution Systems to FNAL (1 in FY07)
- 60 Processed Couplers to FNAL (12 starting in FY07)
- Coupler Development and Prototypes
- 5 Production RF Sources Operating at SLAC (1 at FNAL)

RF Source Summary

- SLAC pursuing alternate designs while XFEL concentrating more on baseline approaches.
- Marx Modulator looks promising.
- Toshiba 10 MW MBK appears robust, Thales MBK problems seem to be understood – horizontal versions being developed.
- A sheet beam klystron is being built that is more compact, lighter and likely less expensive than the MBK.
- Evaluating various rf distribution approaches to lower system cost and maximize useable gradient.
- Well developed plans for US rf program in FY08-09.