Discussion for the LP endplate

D. P. Peterson Cornell University, Laboratory for Accelerator-based ScienceS and Education

See also: http://w4.lns.cornell.edu/~dpp/linear_collider/LargePrototype.html

This project is supported by
the US National Science Foundation (LEPP cooperative agreement)
and an LCDRD consortium grant

Endplate/band geometry, 2006-11-09

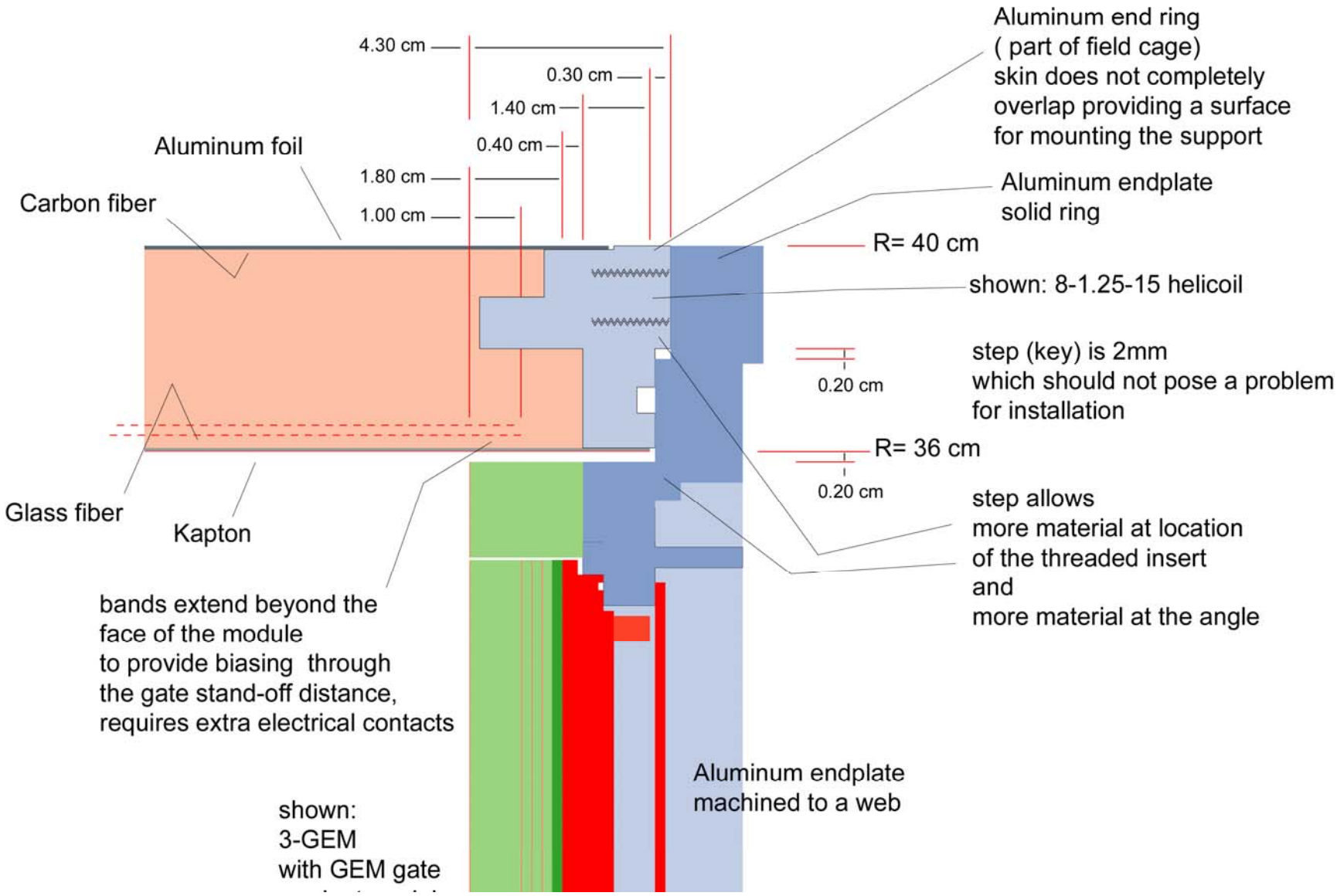

Endplate/band geometry, 2007-01-17

before decreasing radius,
outer 400mm -> 385mm
insert 377mm -> 362 mm

module height was
legislated at 28mm

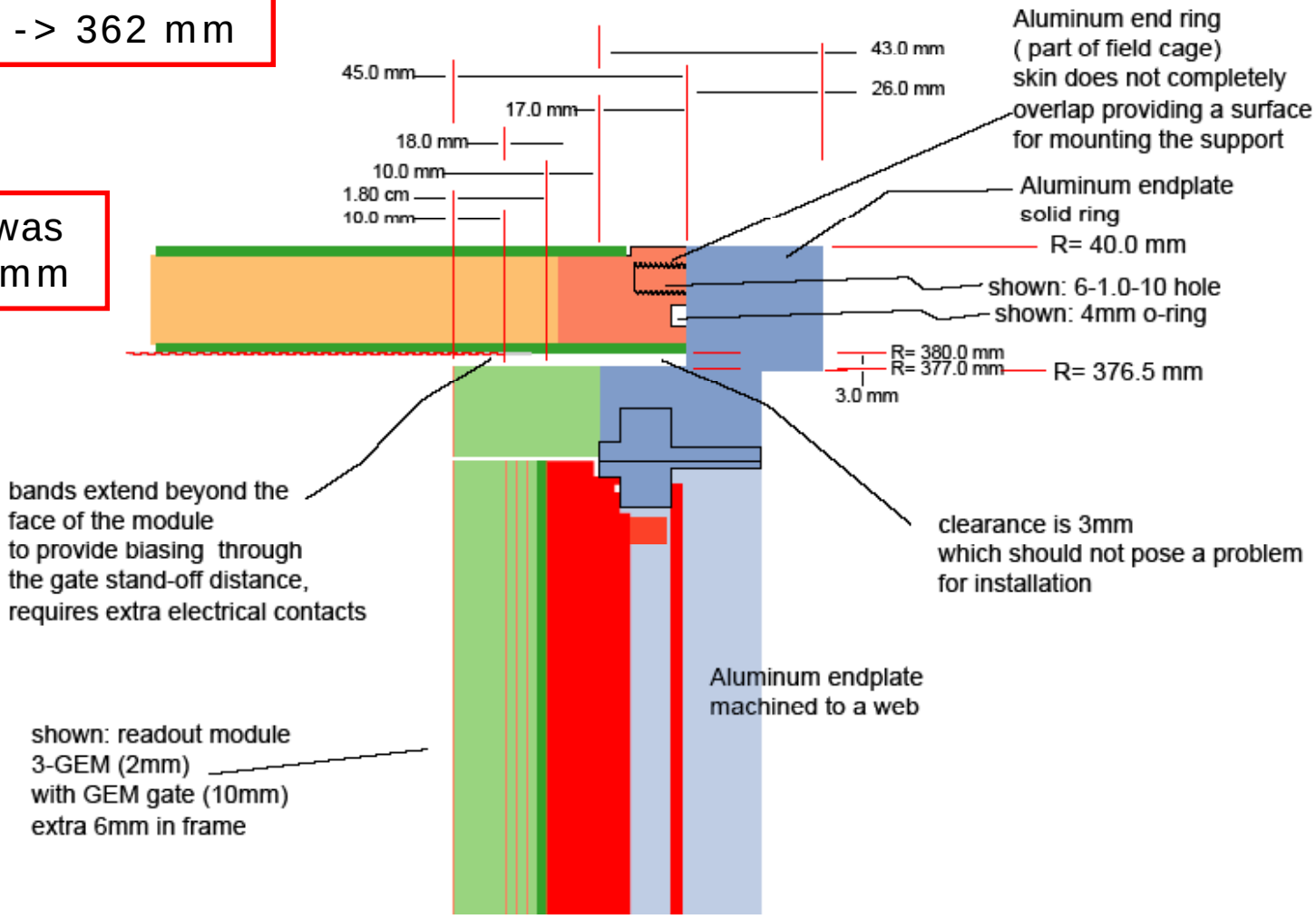

Endplate/band geometry, From Peter Schade 2007-05-23

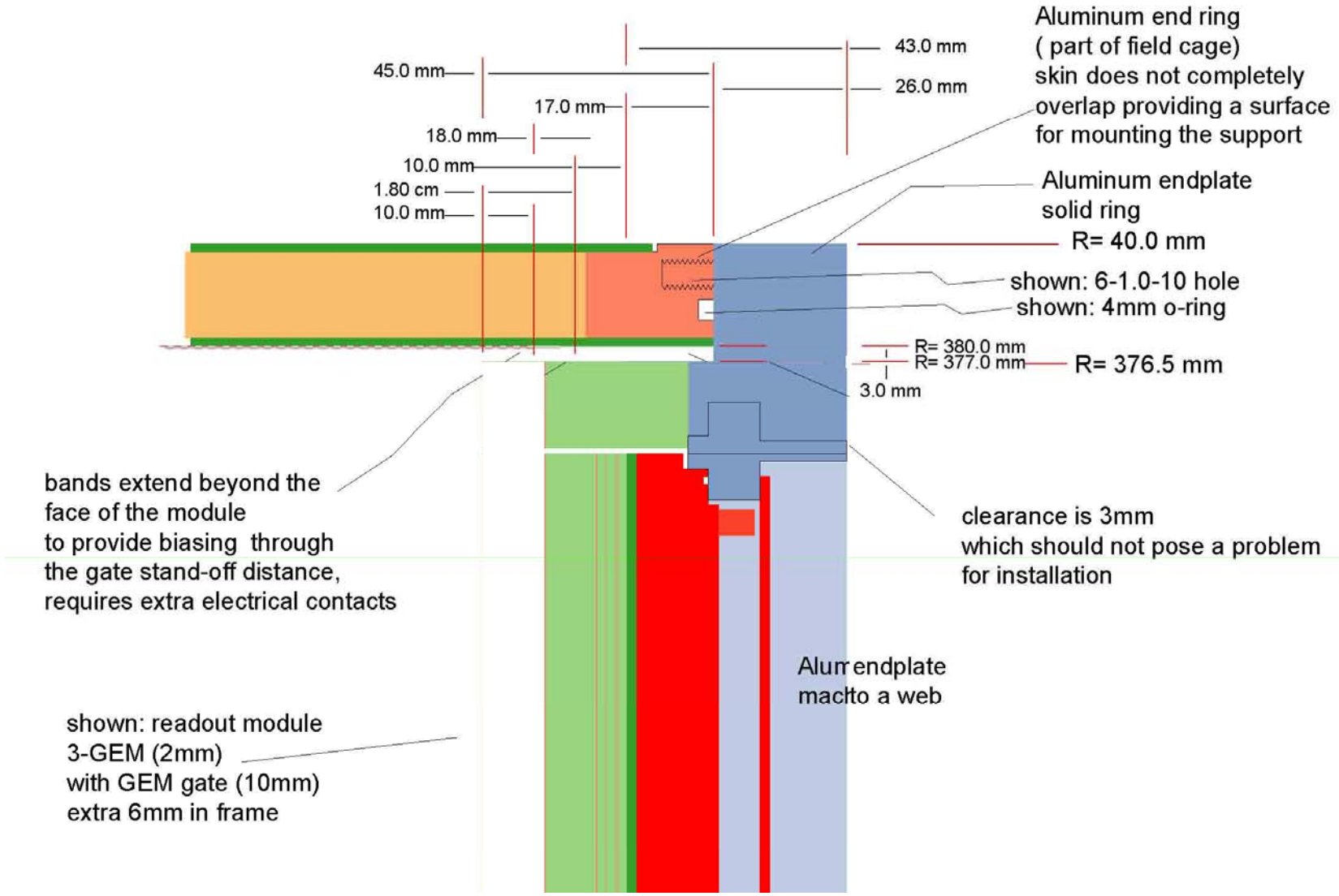

Endplate/Module model 2007-03-19

This is with equal radius-of-curvature

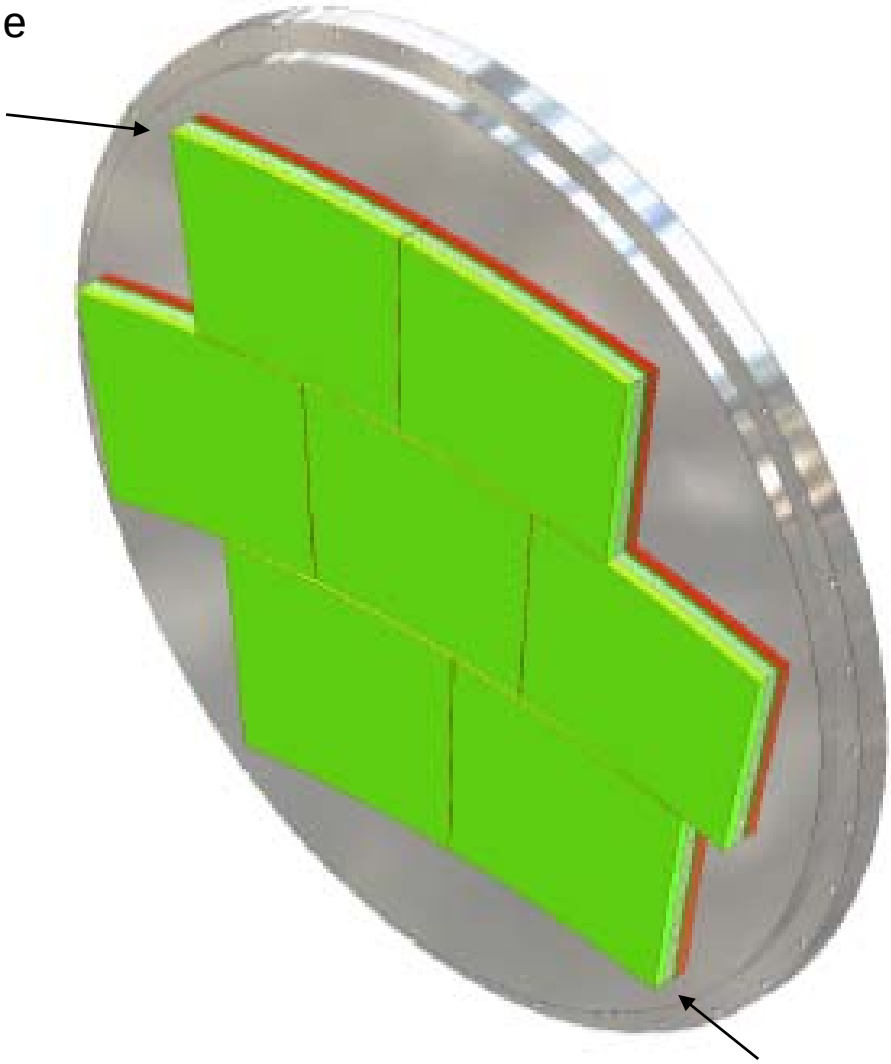

before decreasing radius,
outer 400mm -> 385 mm
insert 377mm -> 362 mm

“stay clear” = 357 mm

Endplate/Module model, 2007-05-24

This is with equal center-of-curvature

after decreasing radius,
outer 400mm -> 385 mm
insert 377mm -> 362 mm

“stay clear” = 357 mm

discuss the “bounding box”

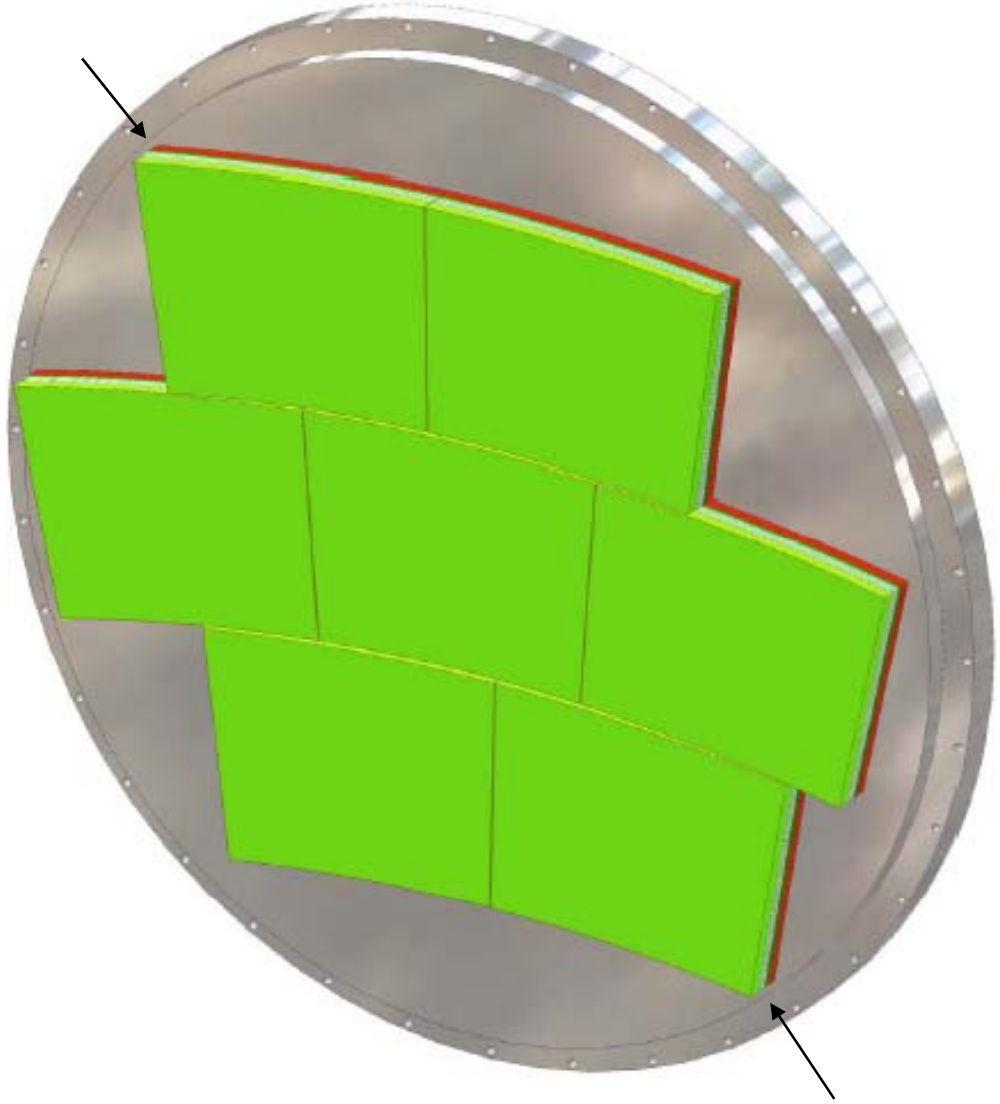

Endplate/Module model, 2007-05-24

This is with the equal center-of-curvature (outside)

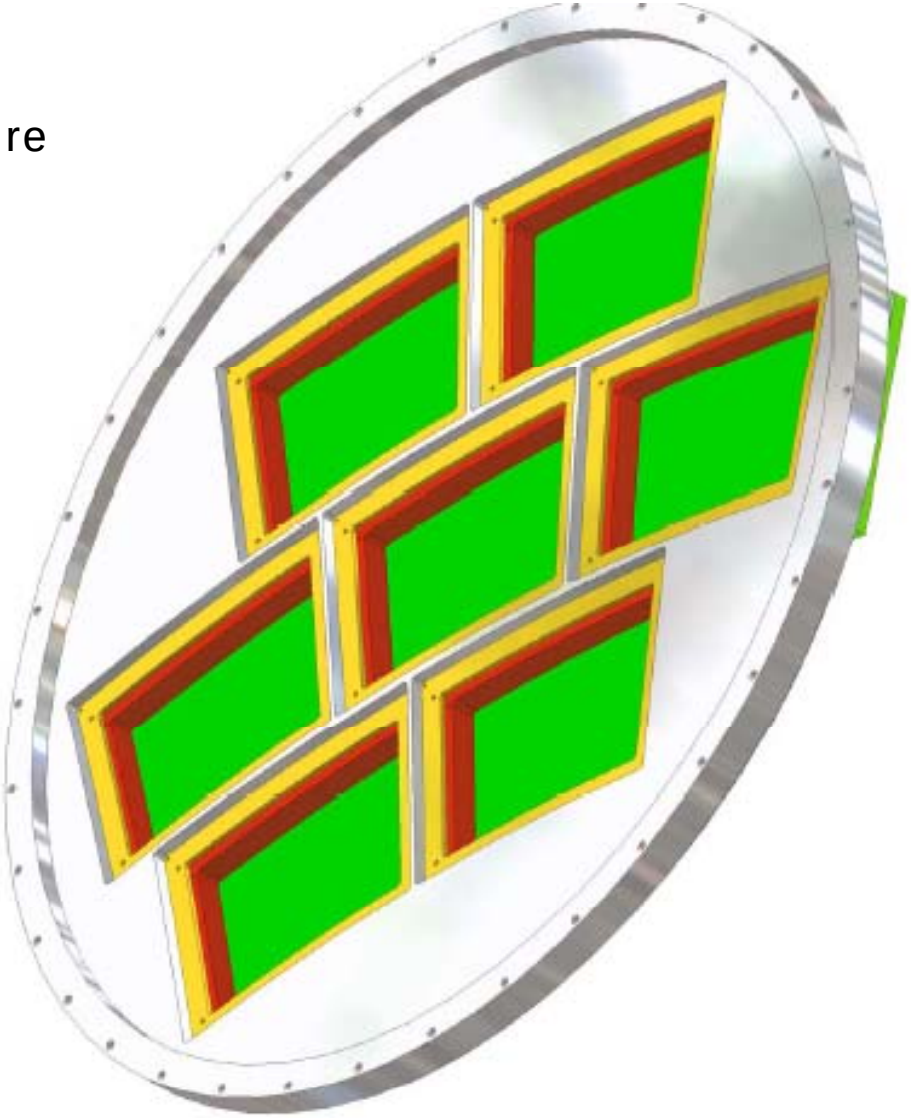

Endplate/Module model, 2007-05-25 (variation)

This is with
not-equal center-of-curvature,
not-equal radius-of-curvature.

The lower radius of curvature
is set to be almost flat,
9144 cm (100 yards).

The spread-sheet-driven model
works. However, the extreme
change in radius uncovers an
error in the model.

This is an error in the way that
the constraints are applied to
the module positions.

This will be fixed.

This does not affect the bounding
specifications.

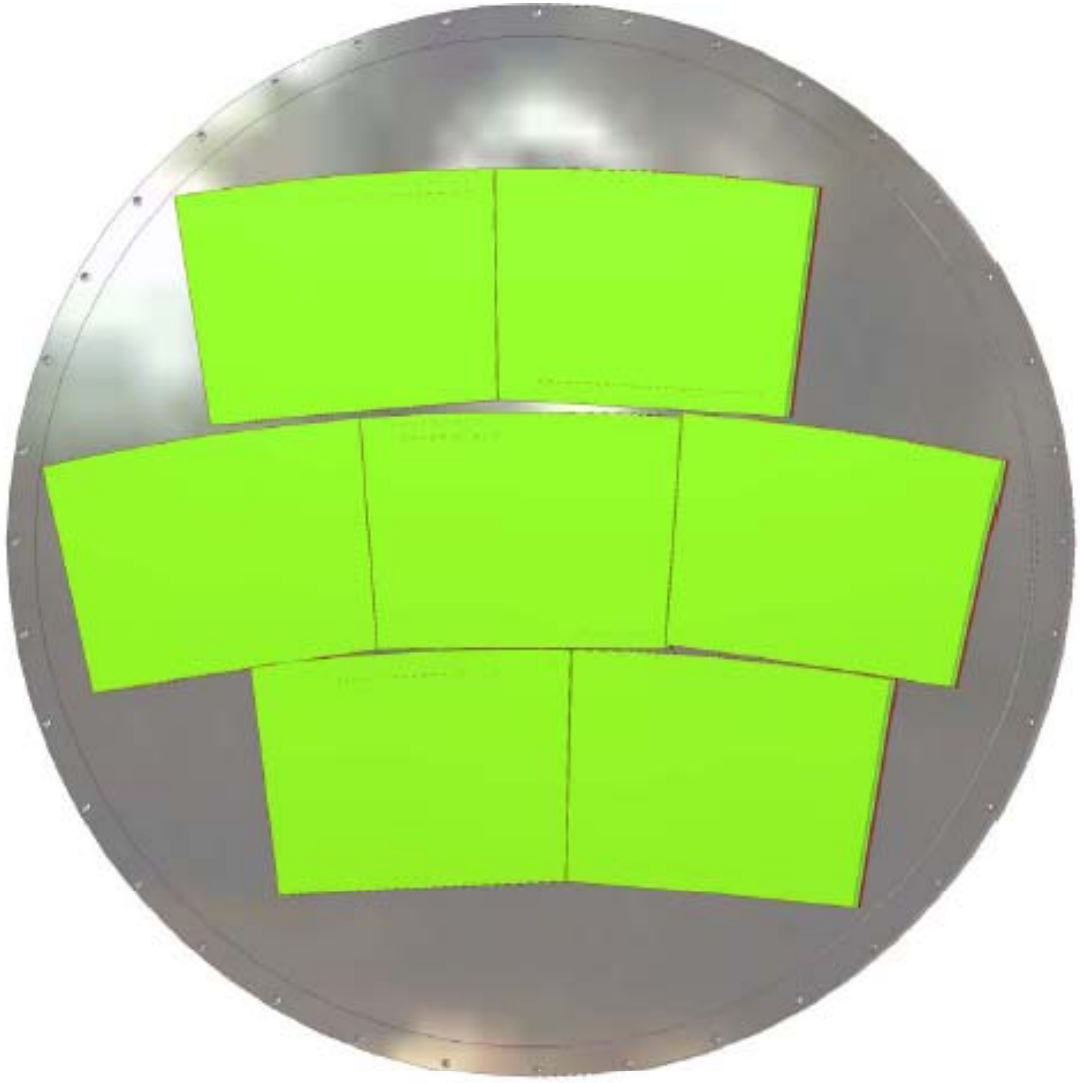

Endplate Drawings, 2007-05-25

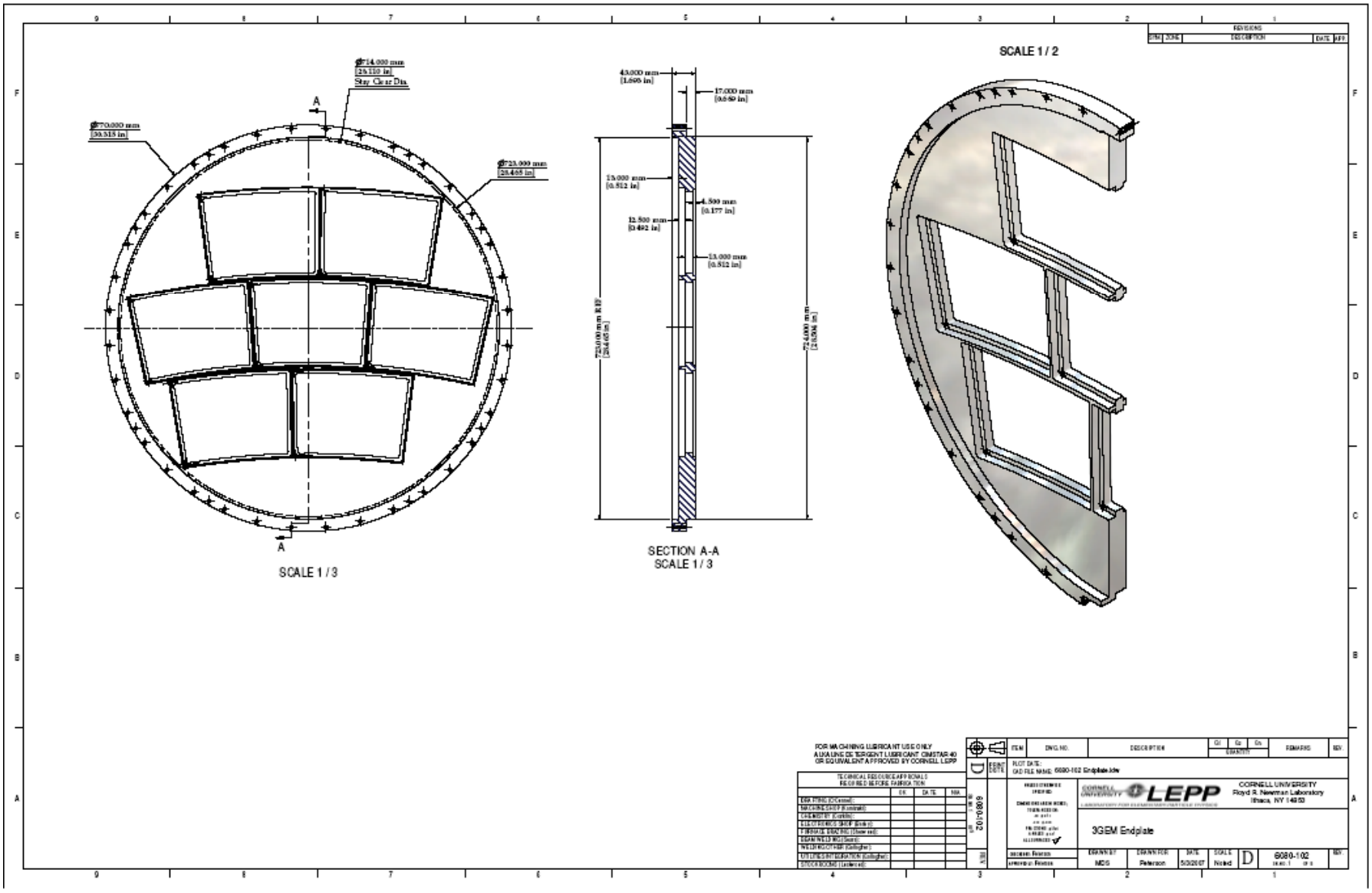

Endplate Drawings, 2007-05-25

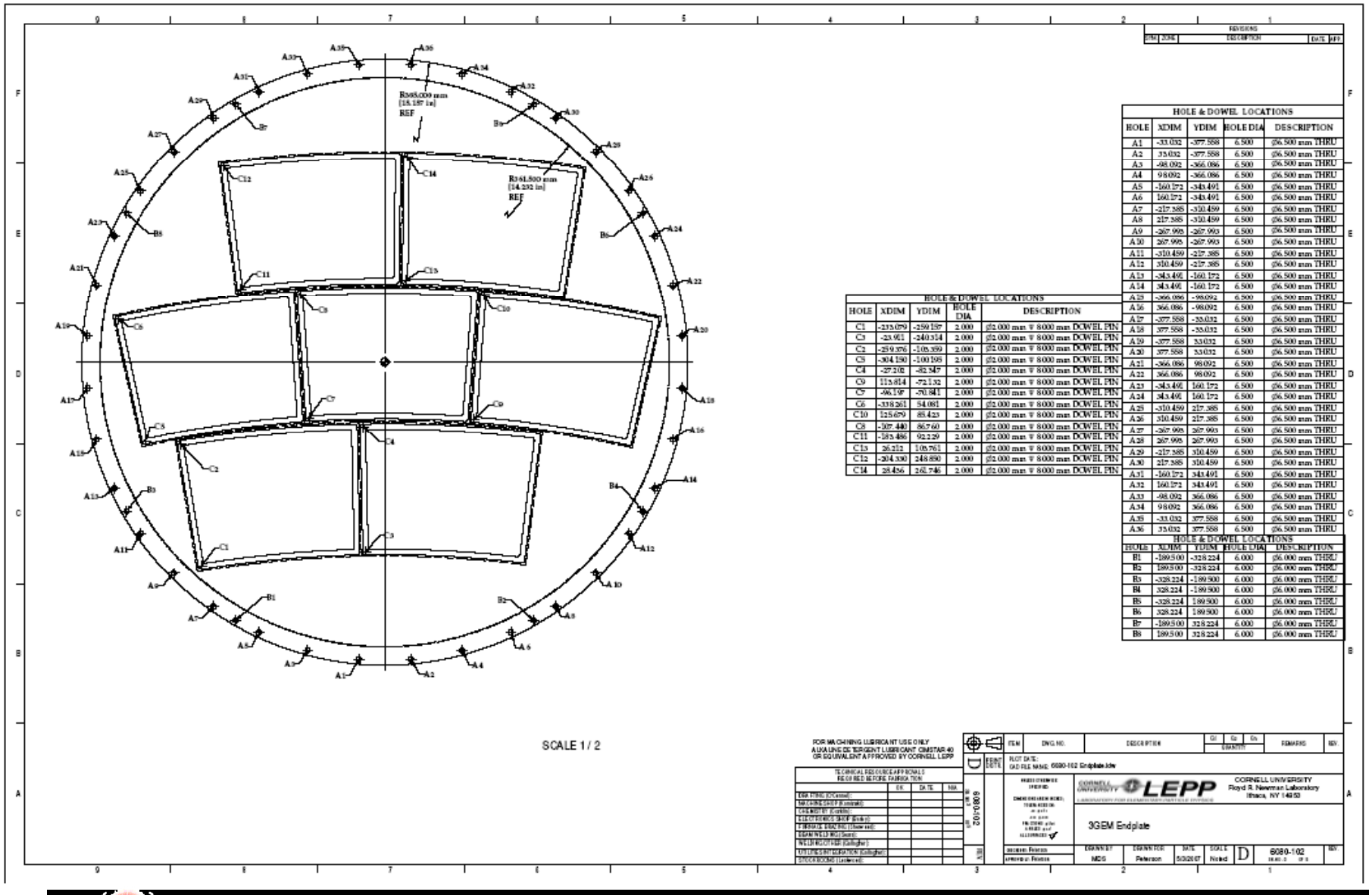

CORNELL UNIVERSITY LEPP
LABORATORY FOR ELEMENTARY-PARTICLE PHYSICS

D. Peterson, "LC-TPC LP endplate", LC-TPC group meeting at LCWS07, 04-June-2007

The Bounding Box, 2007-05-25

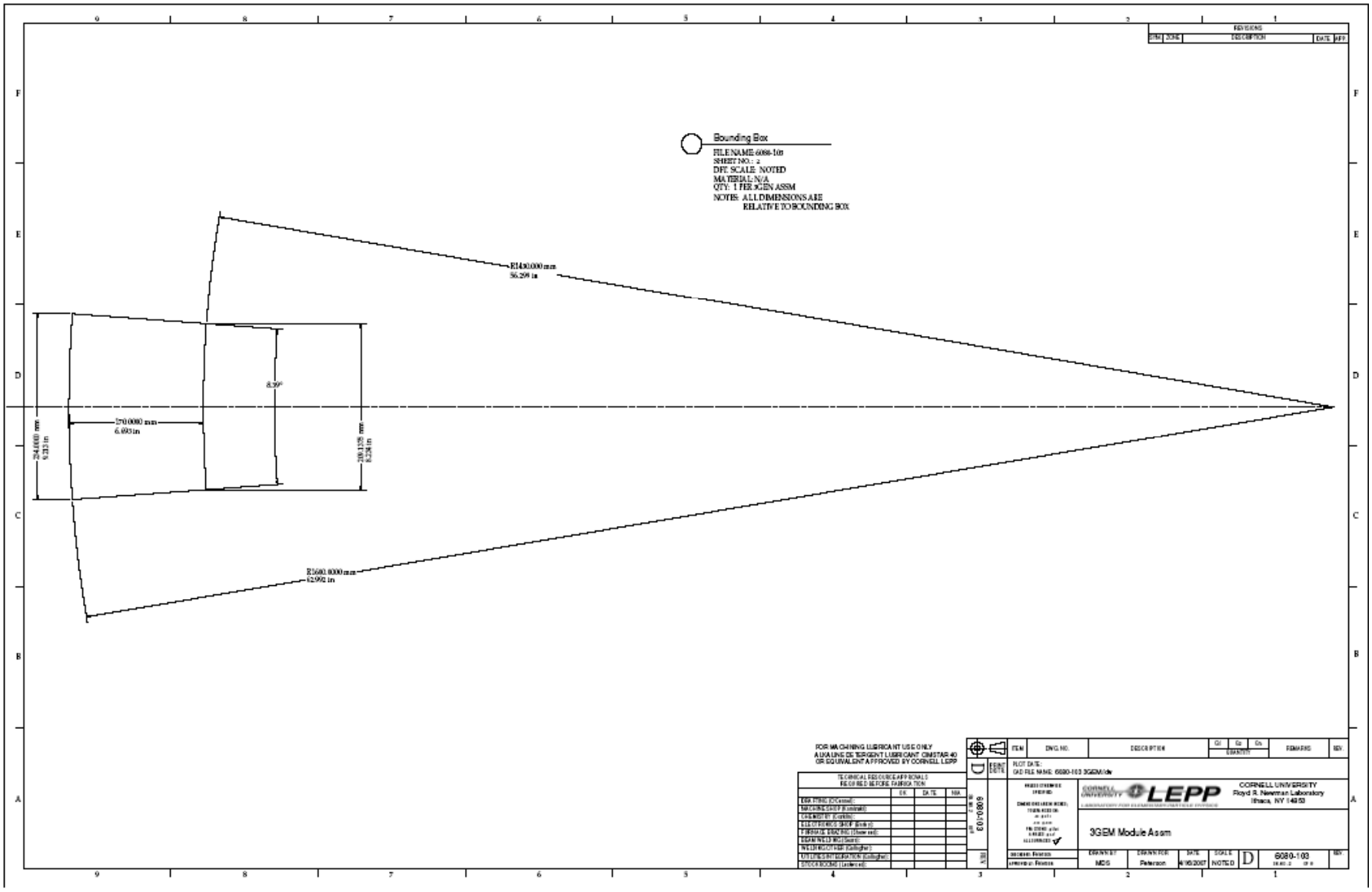

The Bounding Box, 2007-05-25

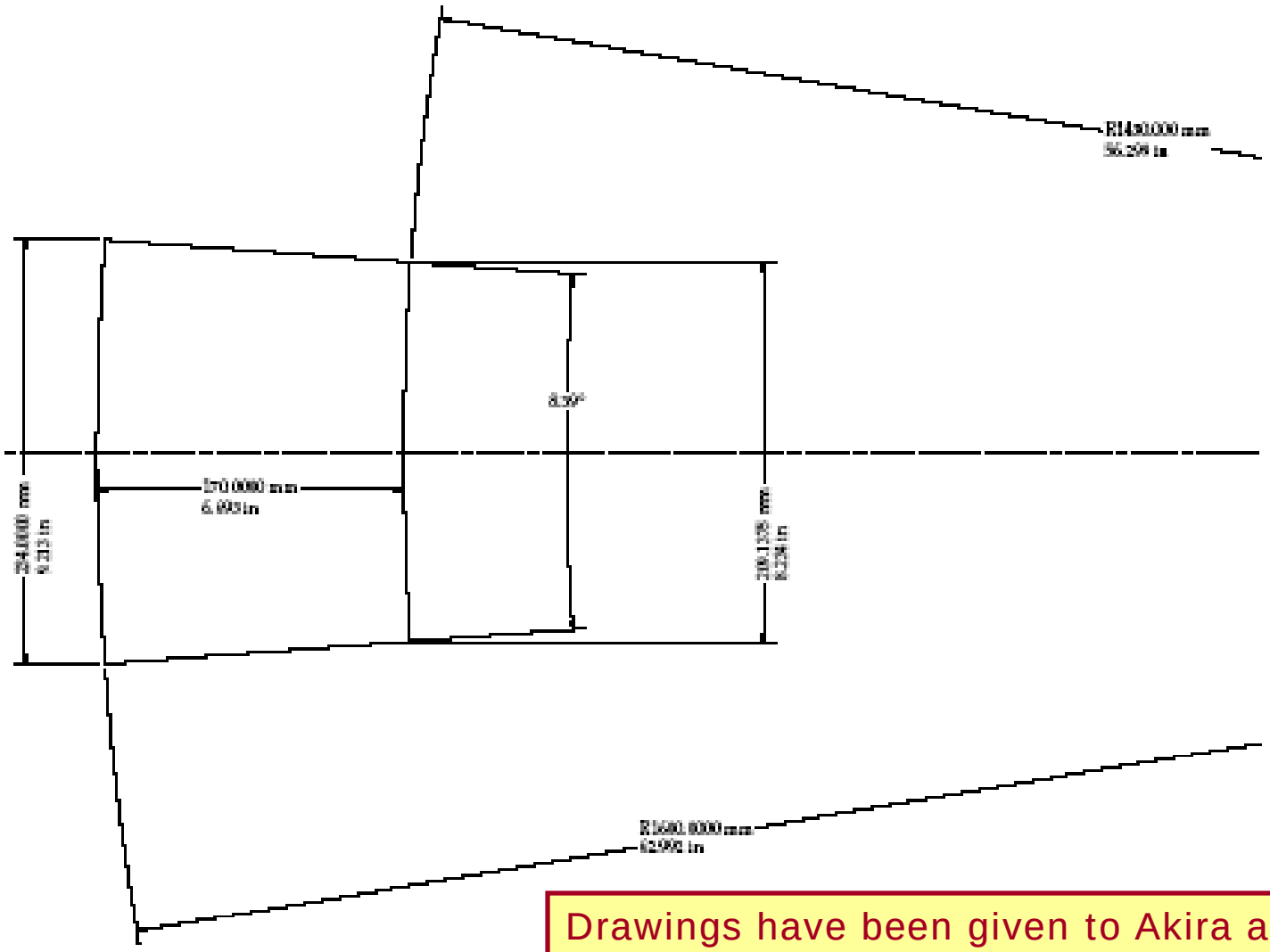

Drawings have been given to Akira and Paul in pdf.

Module Drawings, 2007-05-25

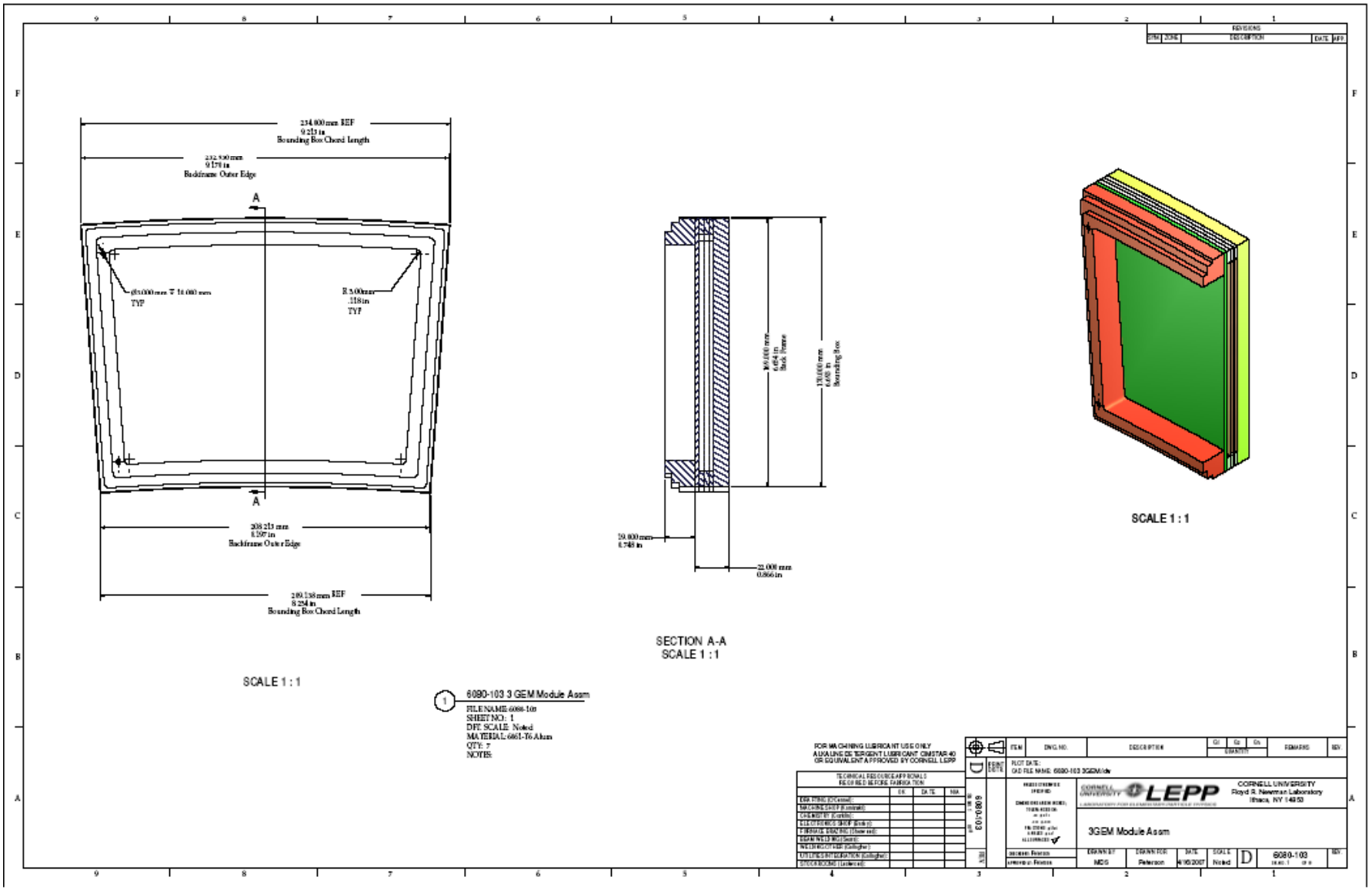

Module Drawings, 2007-05-25

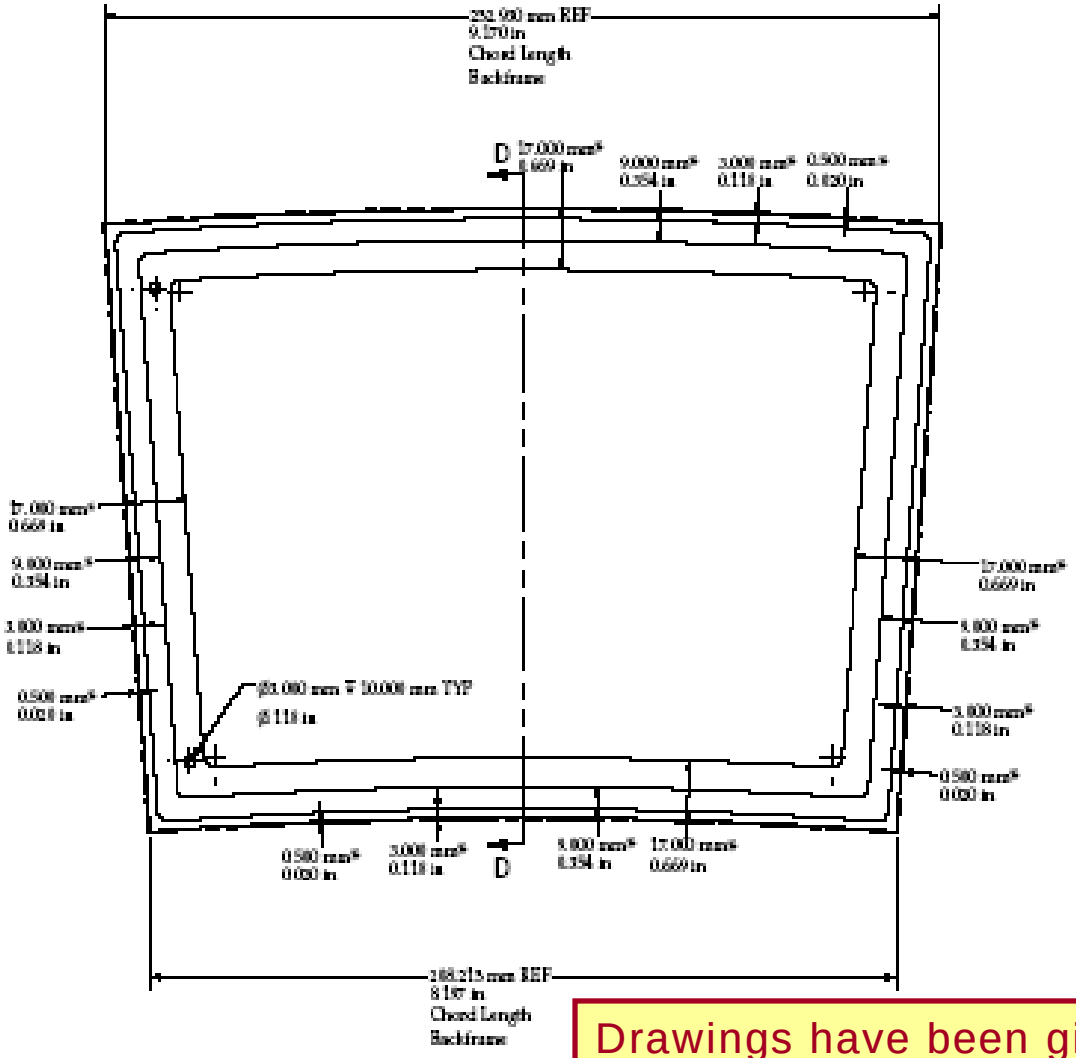

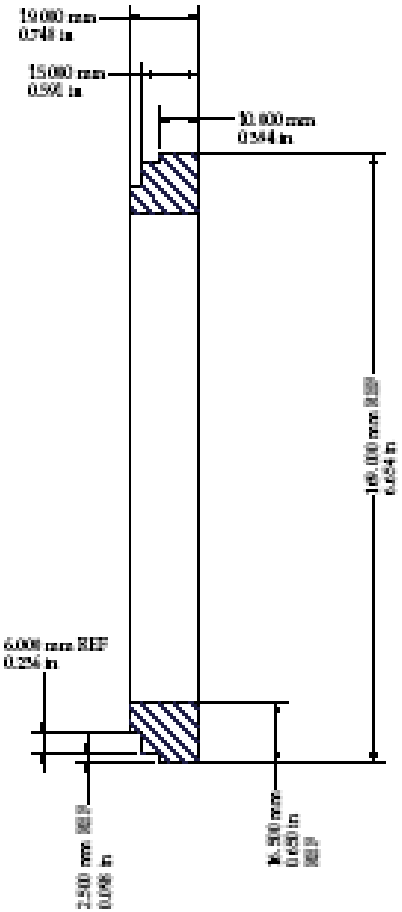

Drawings have been given to Akira and Paul in pdf.

Module Drawings, 2007-05-25

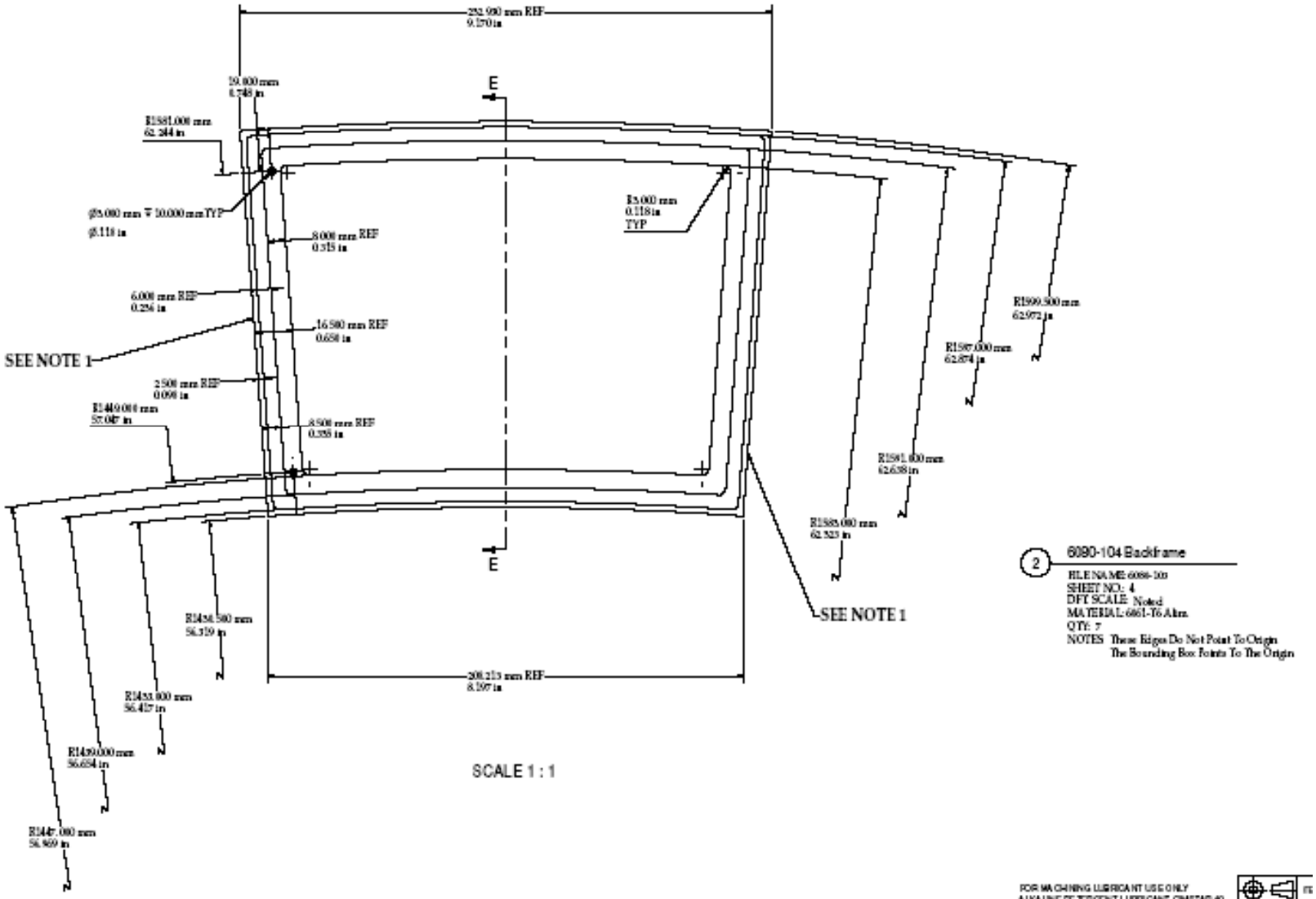

Stress relief test piece

This shows the first in a series of “stress relief test pieces”.

This has been cut with a center opening of 30cm wide. The “mullions” are the same size as proposed in the endplate drawing: 18mm at the widest width, 14mm in depth.

This is the first baseline part, with no stress relief.

It has been fully measured on a CMM. The mullion position is distorted upward by 500µm (0.020inch).

The drawing was modified to have the strengthening section as shown in the current endplate.

Stress relief test piece

A close-up of the part shown in the previous slide.

Machining a Stress Relief Test Piece, 2007-05-25

Motivation:

A position tolerance of <25μm is needed for the modules to decouple the calibration of the magnetic field from the position calibration of the modules.

I am trying to provide, at delivery, <25μm position tolerance of the mullions. The endplate will then be evaluated after some service time to determine the ability to maintain this tolerance.

The program:

6 plates are being made to the revised drawing.
A multi-step production is used:

1) machine to 1000 μm oversize
2) machine to 750 μm oversize,
3) stress relief
4) machine to 250 μm oversize,
5) stress relief
6) machine to drawing dimensions

Stress relief processes:
2 plates - (3)heat to 325F, (5)heat to 650F
2 plates - rapid cooling to liquid N_2
2 plates - ultrasonic cleaner, 6 hours

Coordinate Measuring machine (CMM), 2007-05-25

CMM, 2007-05-25, Z measurements

Example of measurement after the 2nd machining.

Units are milli-inch.
0.001 inch = 25.5 µm

This is the Z view.

There is a 30 µm bowing in z-x .

There is a twist about x from left to right of 25 µm.

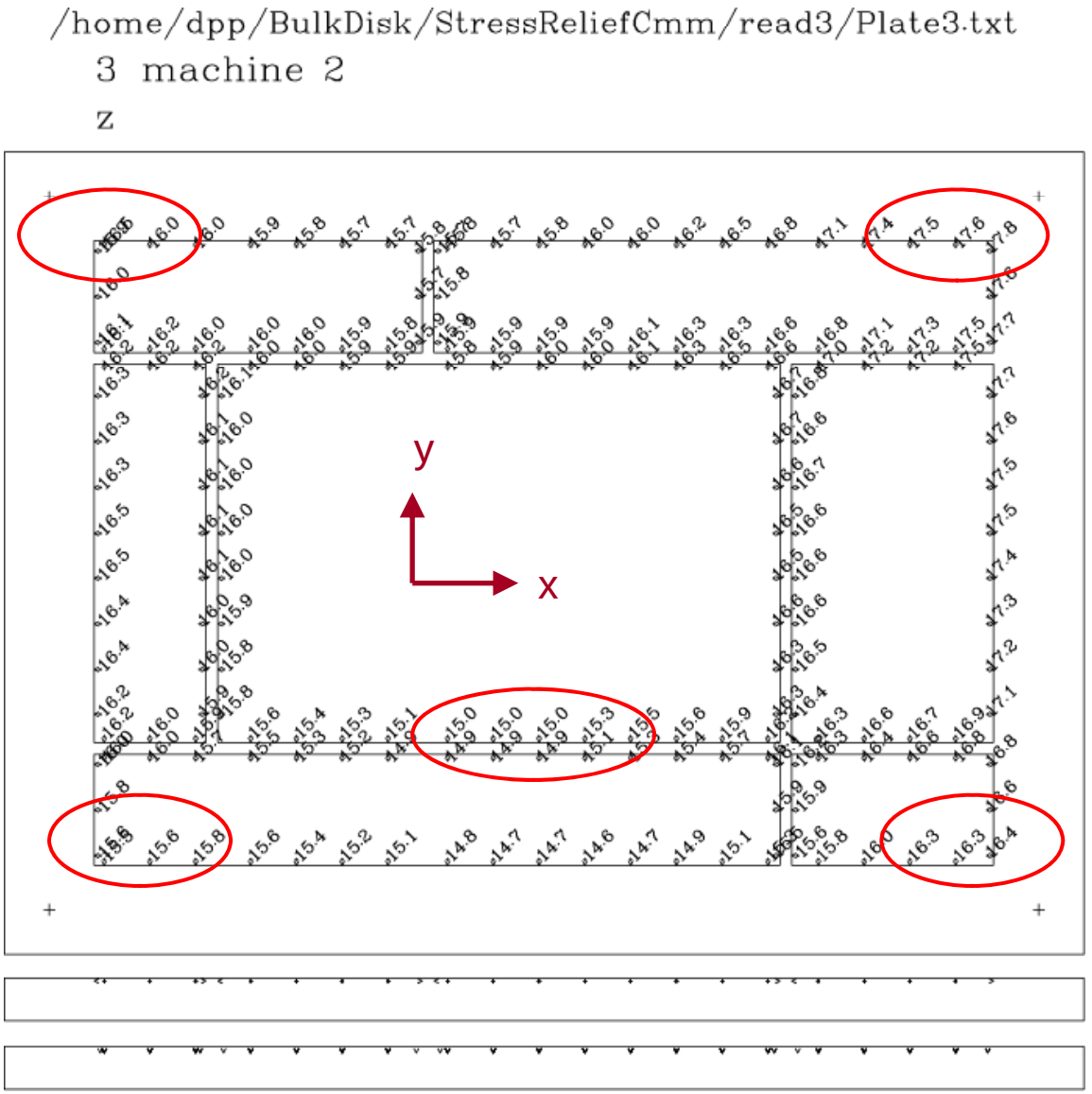

CMM, 2007-05-25, y measurements

Example of measurement after the 2nd machining.

Units are milli-inch.
0.001 inch = 25.5 µm

This is the y view.

There is a 30 µm bowing in y of the indicated mullion.

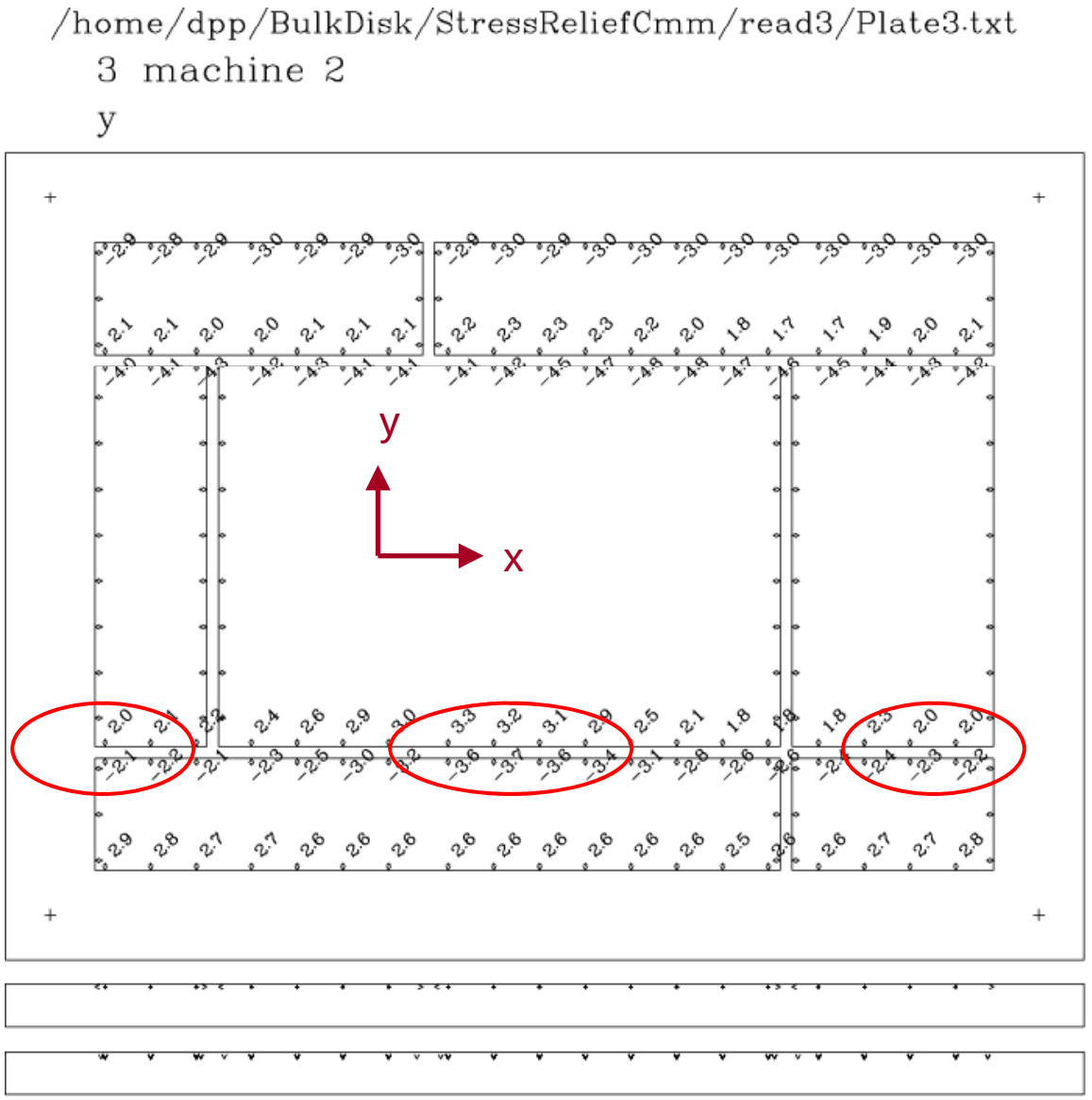

Gas Seal test, 2007-05-25

Test of the o-ring seal.

It can be mounted either way.

- model of mullion
- clamping bracket

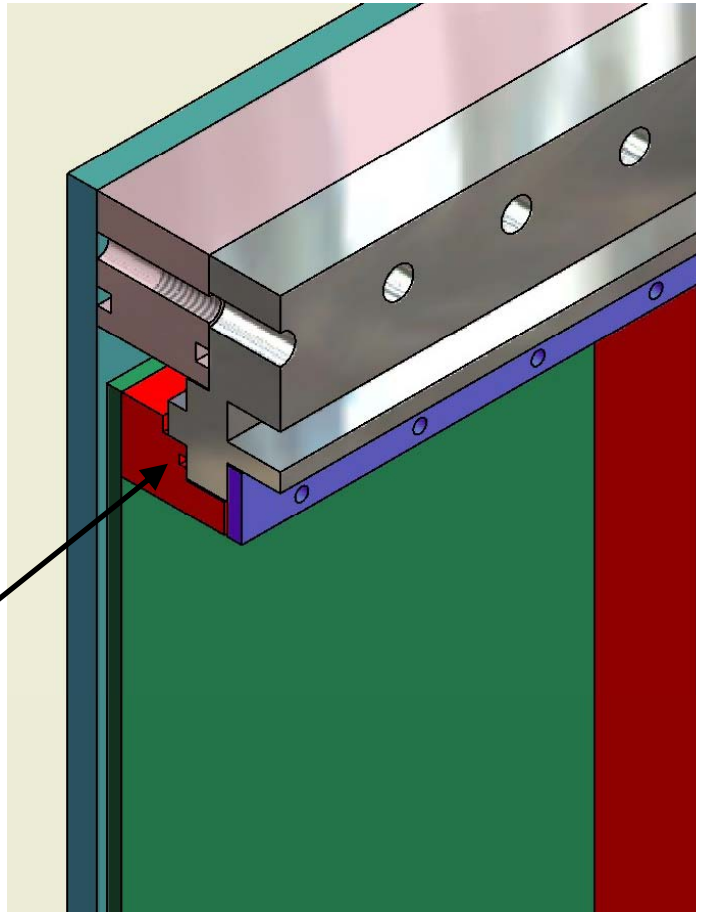

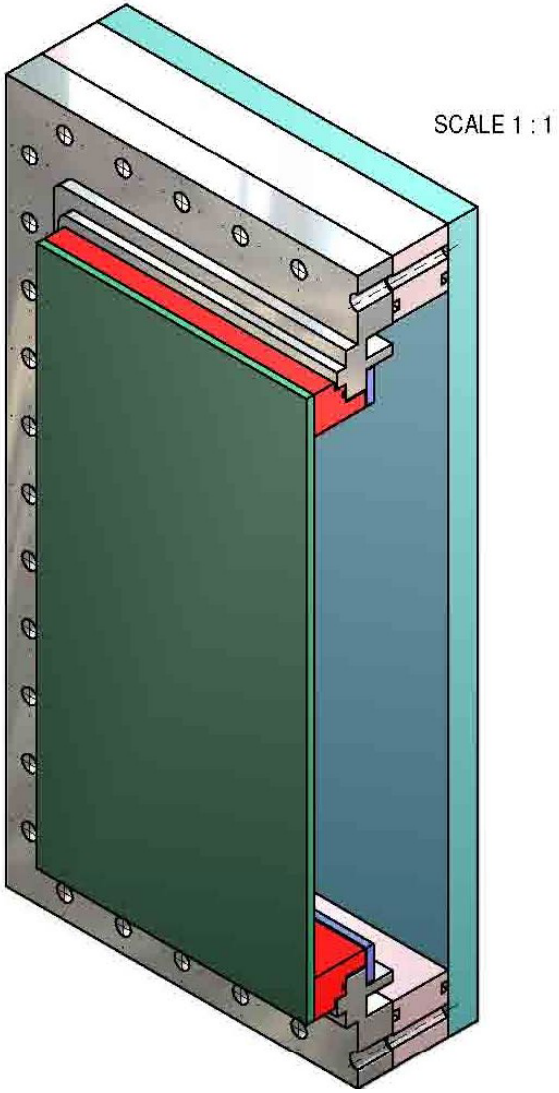

Gas Seal test

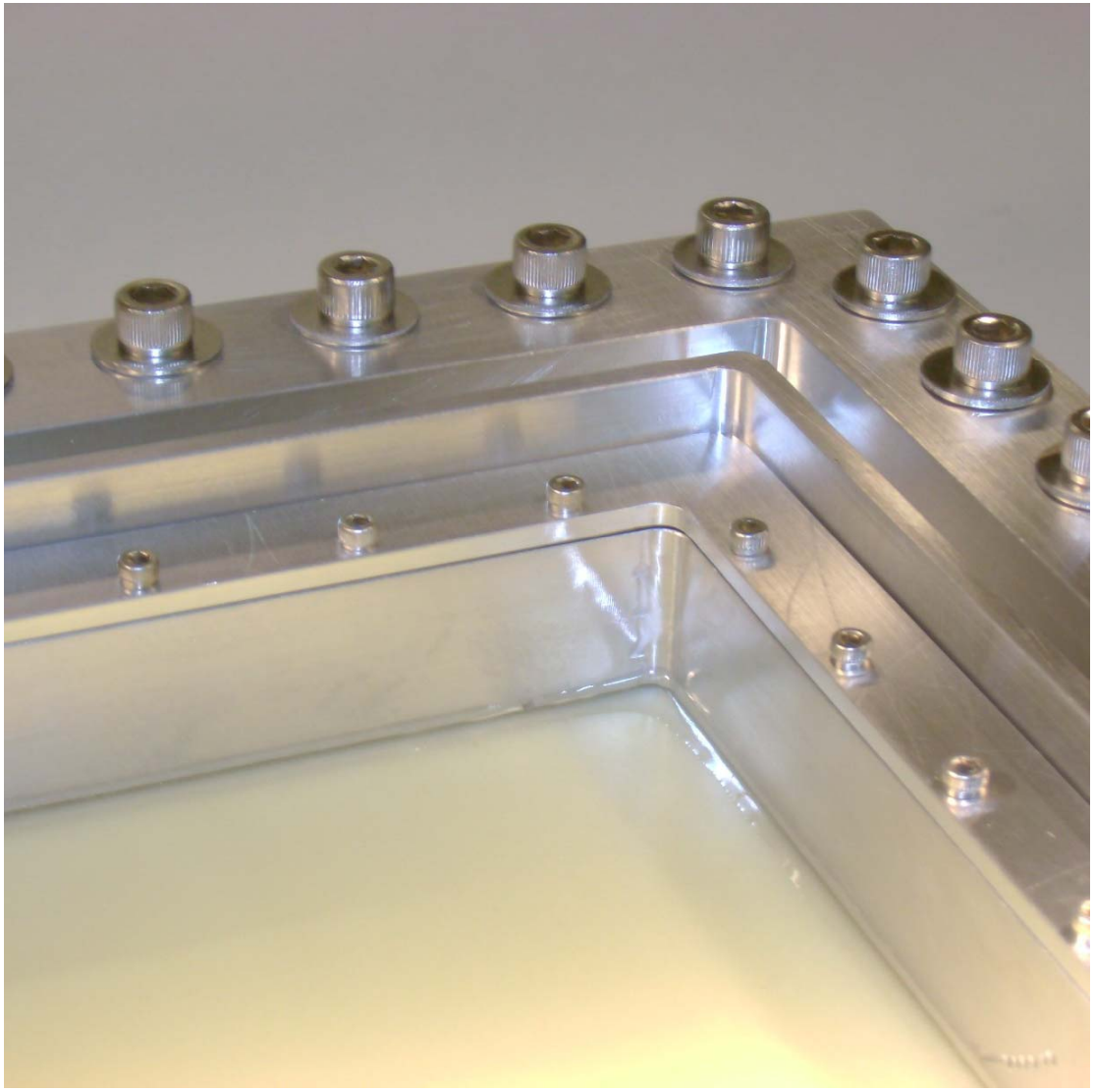

First test, at
oxygen overpressure,
~ 4 cc/hour/panel.

Second test (new back frame with improved o-ring slot)
~ 2 cc/hour/panel

Other improvements to make…

decisions

Interface of endplate to field cage

Bolt locations