High Resolution Cavity BPM for ILC final focal system (IP-BPM)

ILC2007/LCWS 2007 BDS, 2007/6/1

The University of Tokyo, KEK, Tohoku Gakuin University, KNU
T. Nakamura, Y. Honda, Y. Inoue, S-H.Shin, T. Tauchi,
T. Sanuki, S. Komamiya

1, Introduction of ATF2

2, Introduction of IP-BPM

3, Position resolution measurement

4, Summary

ATF2

- Extension of ATF, the test facility for ILC accelerator development, located at KEK, Japan
- Test facility for ILC final focus system
- Start operation at Oct. 2008

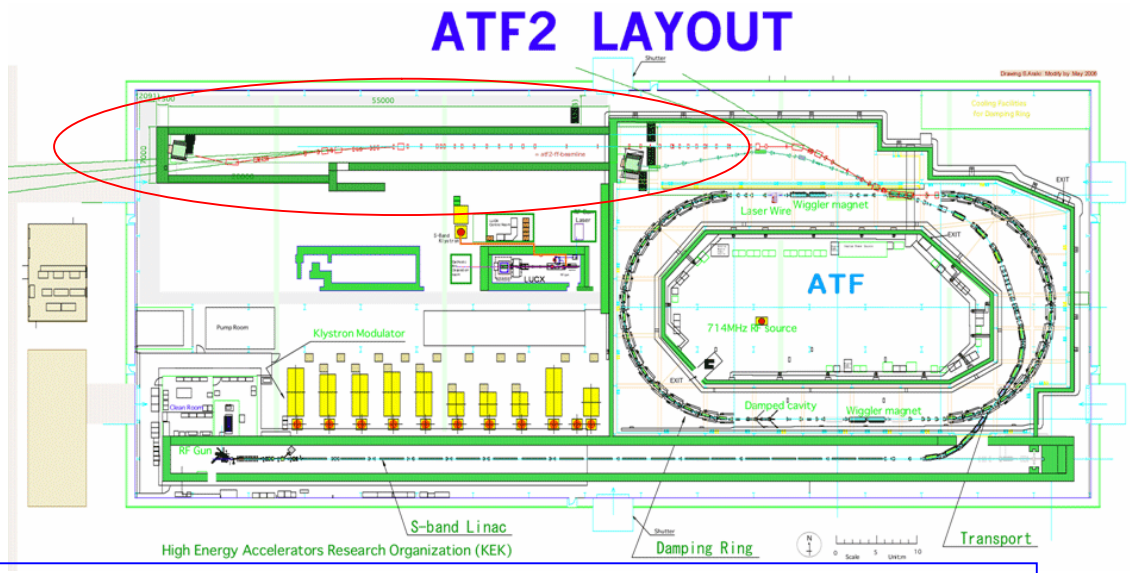

Goals of ATF2:

1, Achievement of 35 nm beam size

2,Control of beam position with 2nm precision at the Interaction Point (IP)

2 nm resolution Beam Positioning Monitor (IP-BPM) Is needed

Goal of IP-BPM

- 2 nm position resolution
- Low angle sensitivity (Angle jitter is large at IP, due to the final focusing)

To achieve ultra high resolution・・・

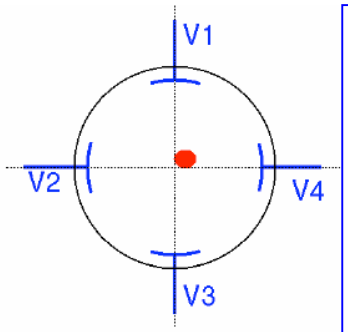

Electrode BPM

- Beam position measured from unbalance of the electrode across
- Resolution is limited at ~1 μm due to the digital subtraction

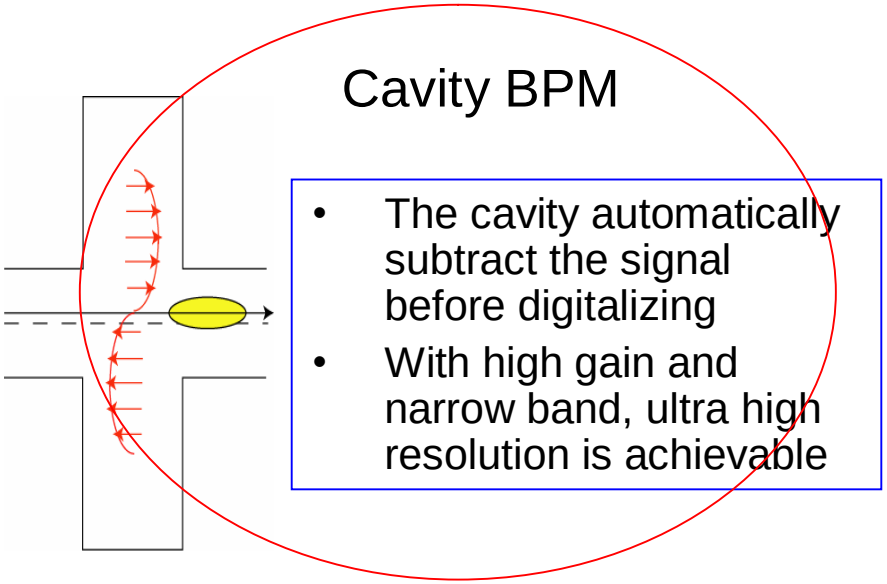

Cavity BPM

- The cavity automatically subtract the signal before digitalizing
- With high gain and narrow band, ultra high resolution is achievable

1, Introduction of ATF2

2, Introduction of IP-BPM

3, Position resolution measurement

4, Summary

IP-BPM Hot Model

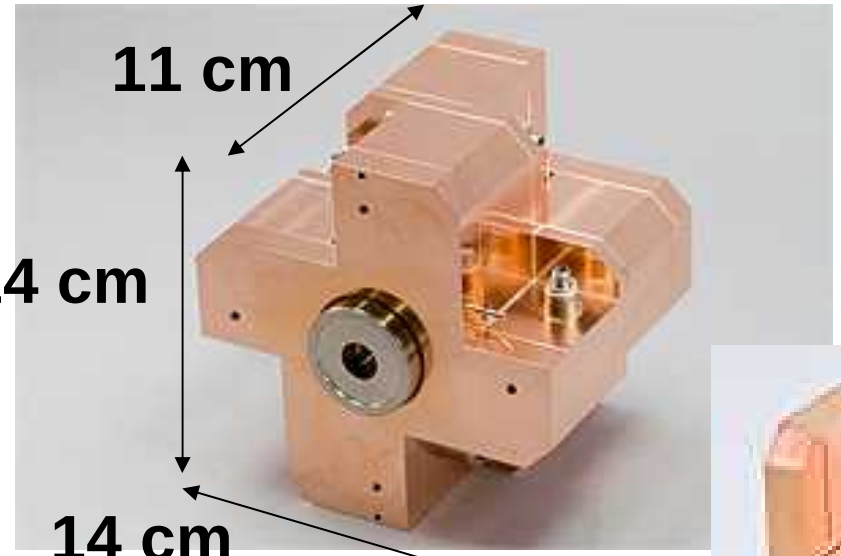

- 2 Cavities in 1 block
- 2 Y ports and X ports in 1 Cavity

2 blocks (4 cavities) fabricated

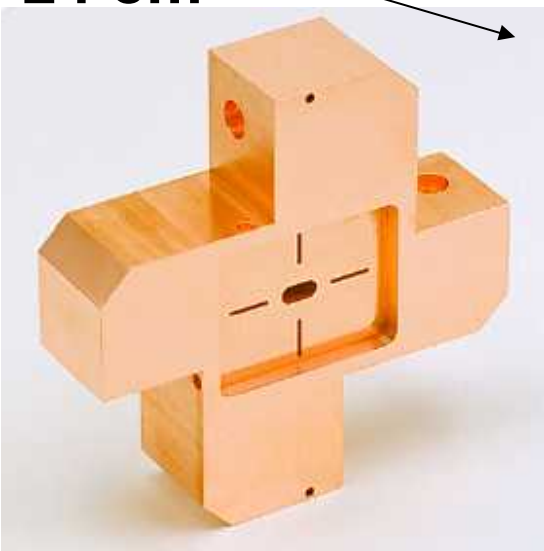

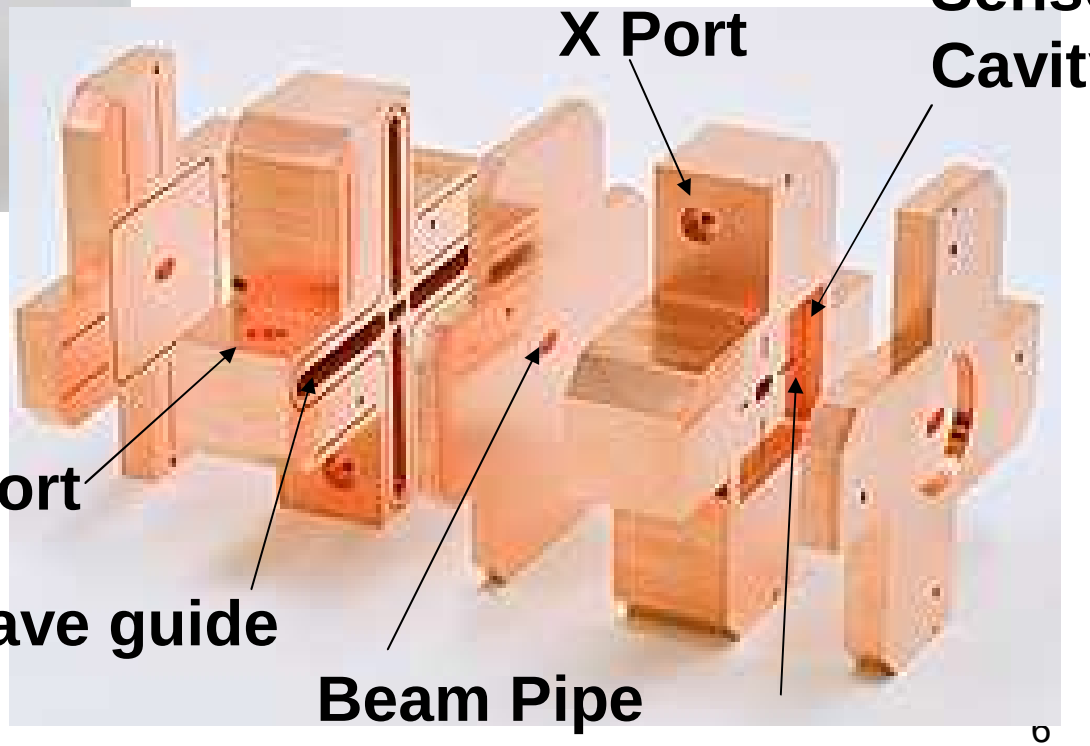

IP-BPM Design

1) Rectangular cavity for X-Y isolation

6.426 GHz di-pole mode for Y

5.712 GHz di-pole mode for X

Isolation: -50dB

2) Low angle sensitivity

Short cavity length (6 mm)

⟷ ~ 12mm for KEK BPM

3) High coupling to recover position sensitivity

High β (2.0 for Y, 1.4 for X)

Low Q_{ext} (~3900 for Y, ~2400 for X)

⟷ ~ 20000 for ATF2 Q-BPM

Small decay time constant τ (~30ns for Y, ~60ns for X)

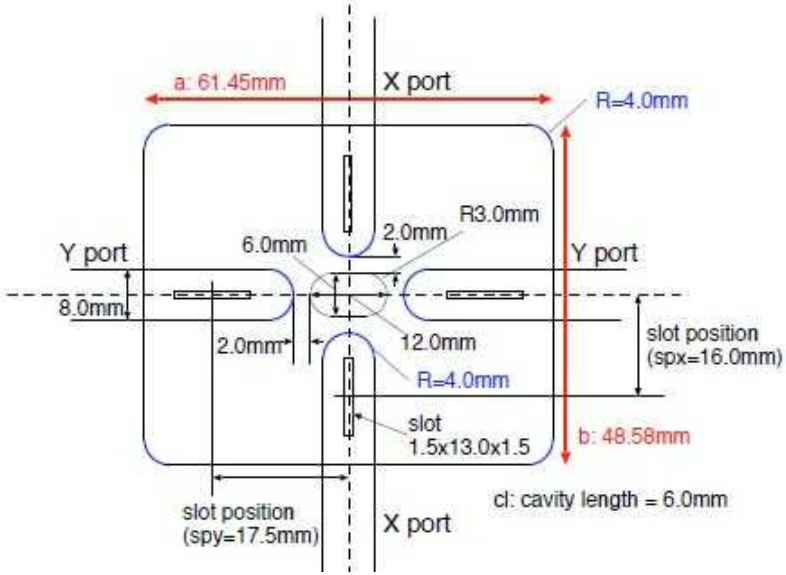

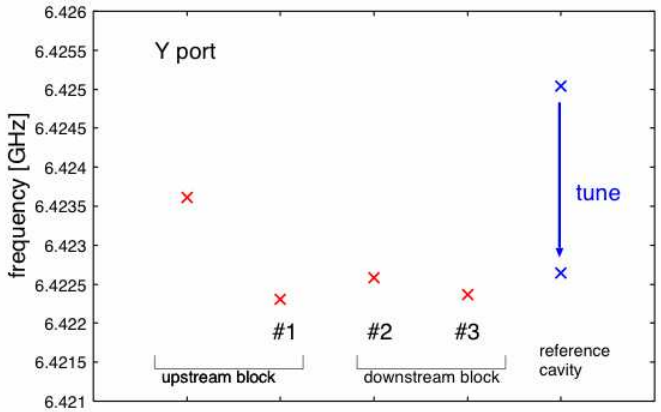

IP-BPM Sensitivity Tests

Position sensitivity test at ATF

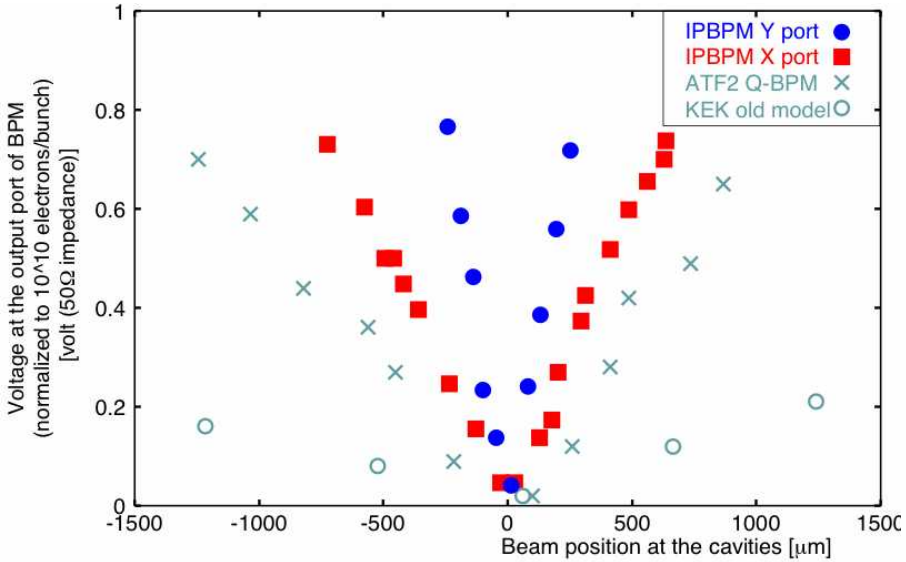

Angle sensitivity test at ATF

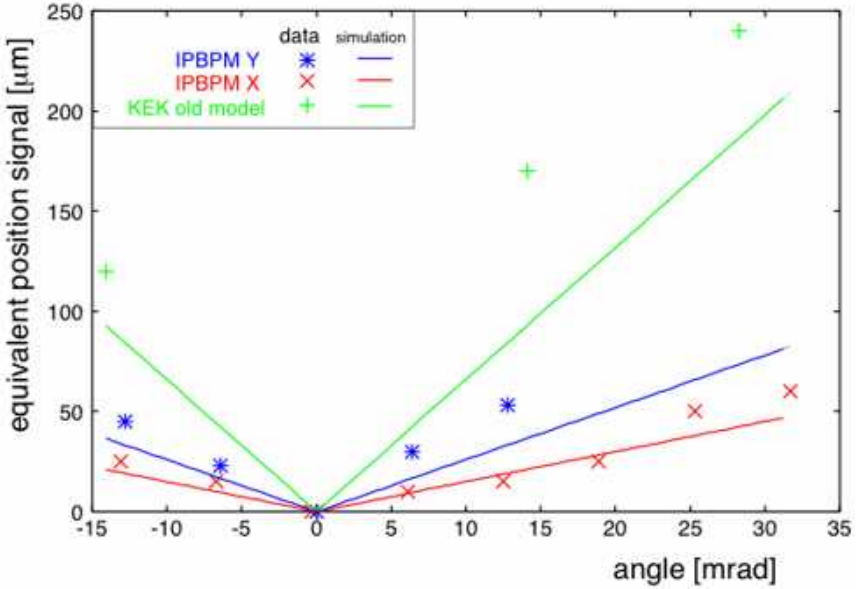

The di-pole mode signal amplitude ∝ y

- **Position sensitivity: x2~3 of ATF2 Q-BPM**
- **Angle sensitivity: ½ ~ ¼ of the KEK old model**

Detecting Scheme

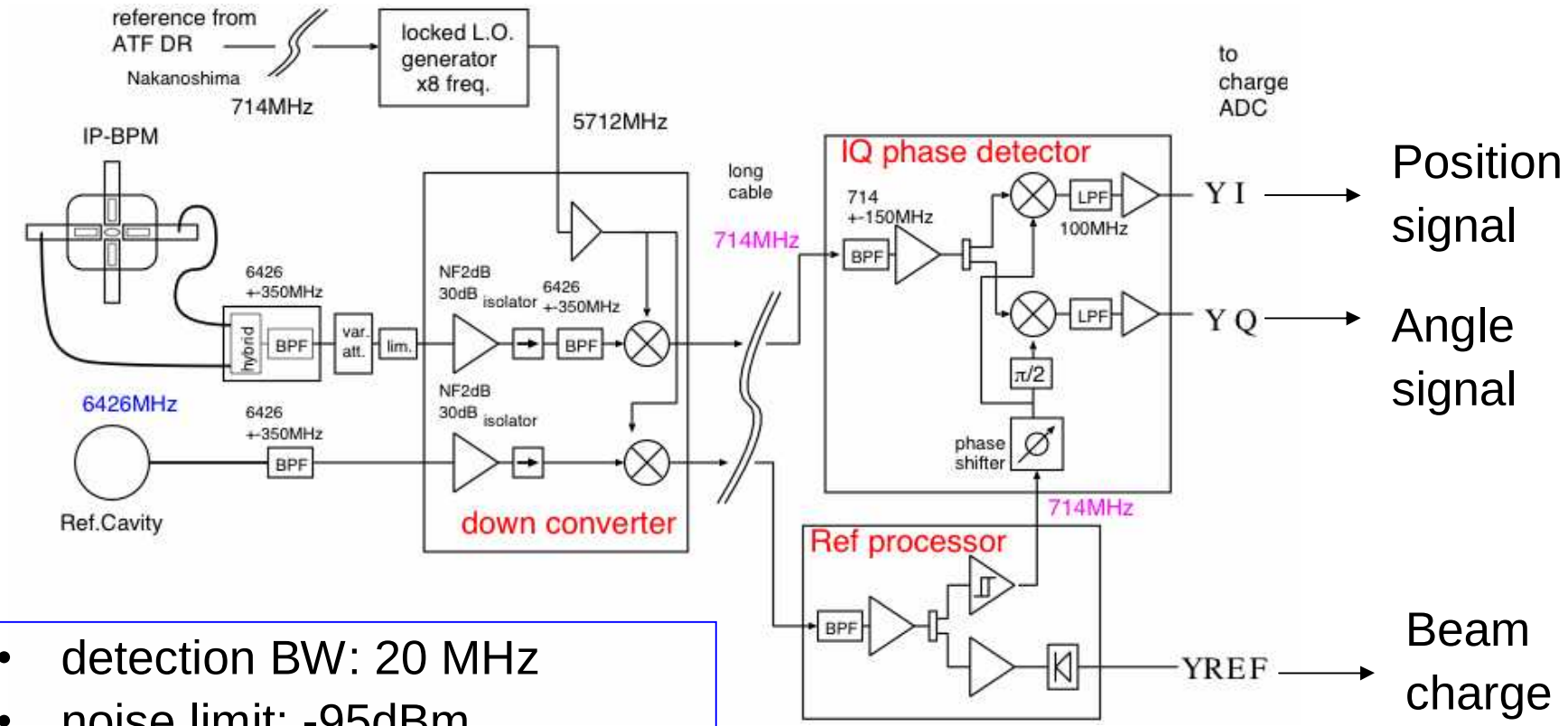

Position signal

Angle signal

Beam charge

- detection BW: 20 MHz
- noise limit: -95dBm
- expected 1nm signal: -97dBm

Used the reference signal as a phase origin

I-Q decoupling

Large beam angle jitter at IP

→ Angle signal (Q) contamination limits position resolution

- Controlled the position of cavities using simm and almi-foils

→ The cavities were aligned in a few microns

- swept the beam parallel and precisely shifted the phase

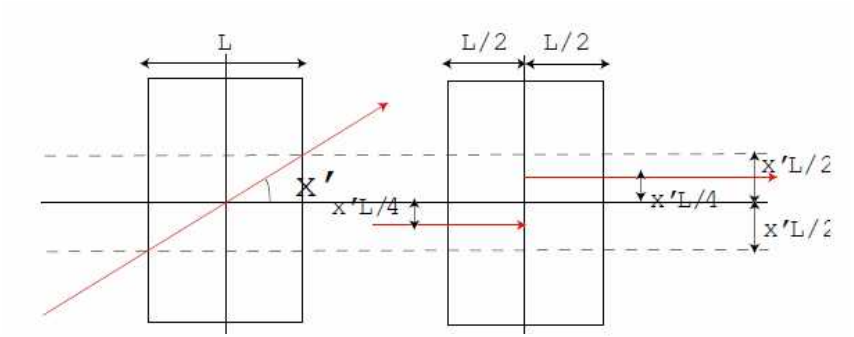

$$\text{Position Signal} = Ax\sqrt{L}\sin(\omega t)$$

$$\text{Angle Signal} = -A\frac{x'L}{4}\sqrt{\frac{L}{2}}\sin\left(\omega\left(t+\frac{L}{4c}\right)\right) + A\frac{x'L}{4}\sqrt{\frac{L}{2}}\sin\left(\omega\left(t-\frac{L}{4c}\right)\right)$$

$$= Ax'\frac{L}{2}\sqrt{\frac{L}{2}}\sin\left(\frac{\omega L}{4c}\right)\cos(\omega t)$$

Angle signal is 90 ° different

→ Q signal

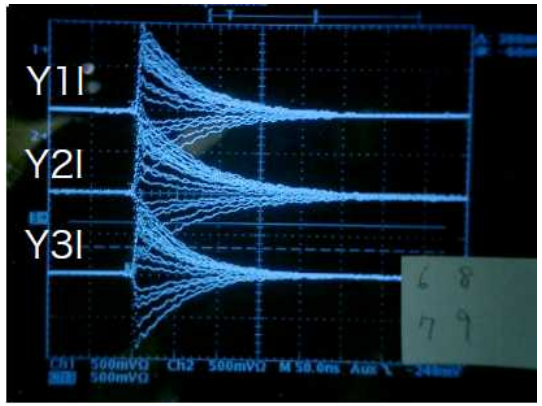

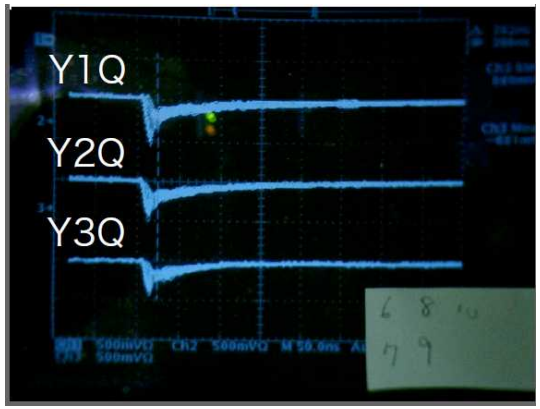

1, Introduction of ATF2

2, Introduction of IP-BPM

3, Position resolution measurement

4, Summary

Analysis Method

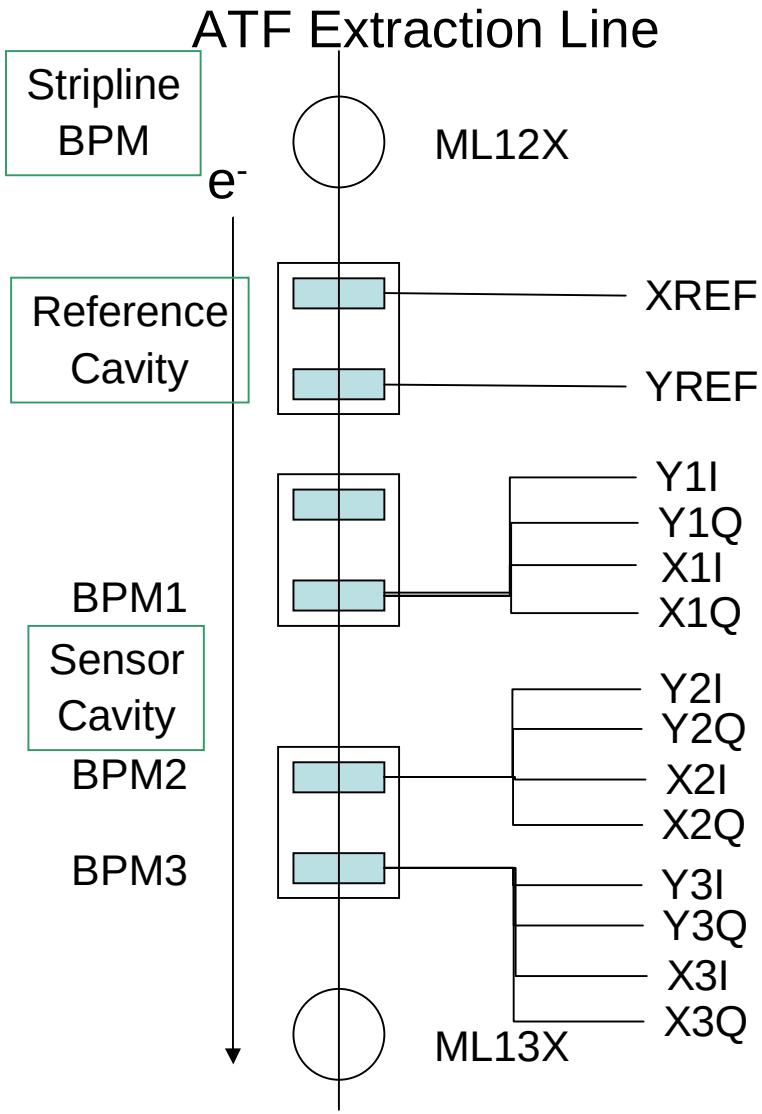

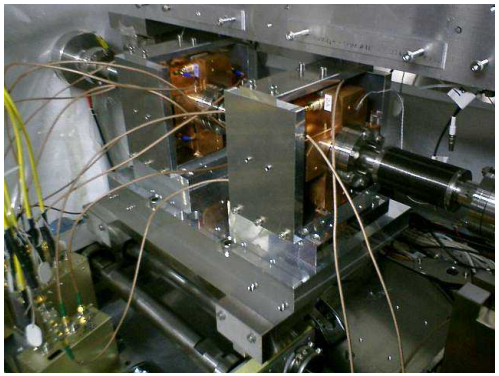

Definition of “Position Resolution”

The precision to predict BPM2 beam position (I signal) from BPM1 & BPM3

1, Calibration of stripline BPMs using wire scanner
2, Calibration Run
   Calibrate ADC read out to position displacement
3, Resolution Run
   RMS of the residual @ ADC read out by regression analysis
4, Position Resolution
   Calibrate the RMS to position resolution

1, Calibration of ATF stripline BPMs

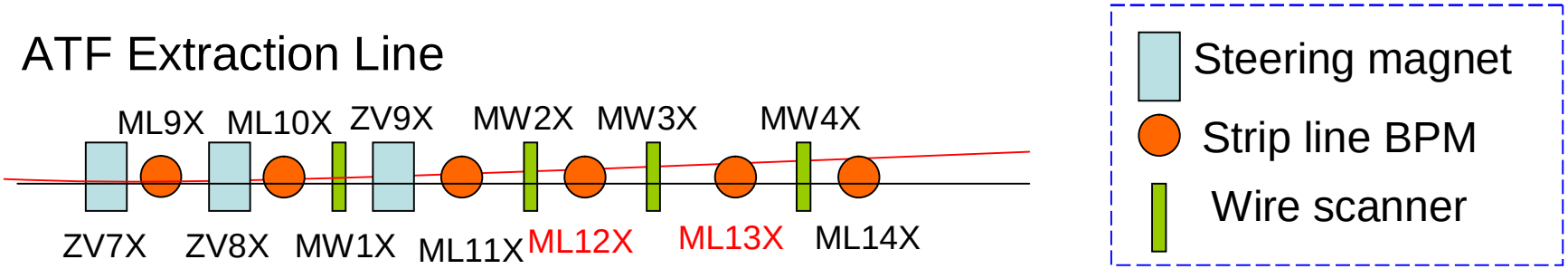

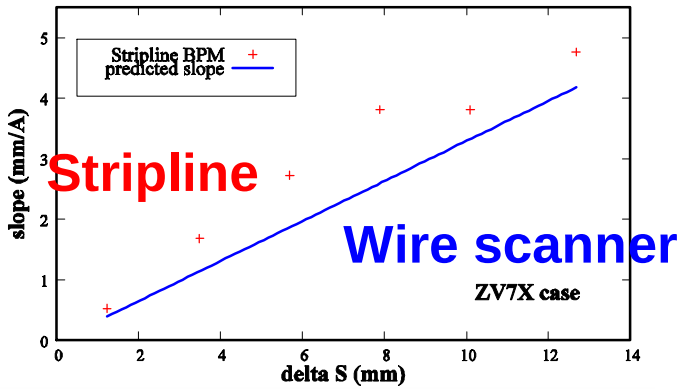

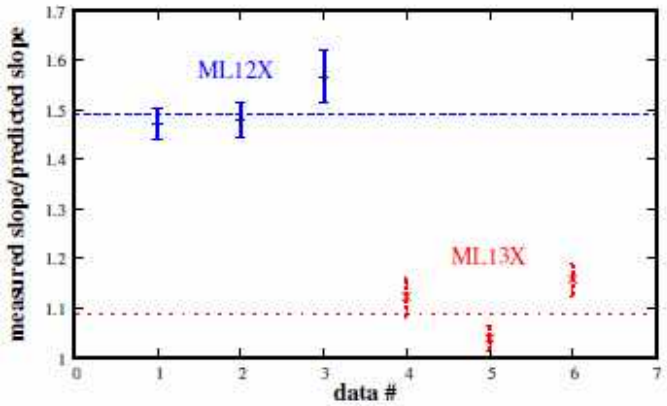

1, Swept the beam with the steering magnet
2, Monitored the beam position with wire scanners & striplines
3, Predicted the beam position at striplines from wire scanner data
4, Estimated the correction factor of striplines

2, Calibration Run

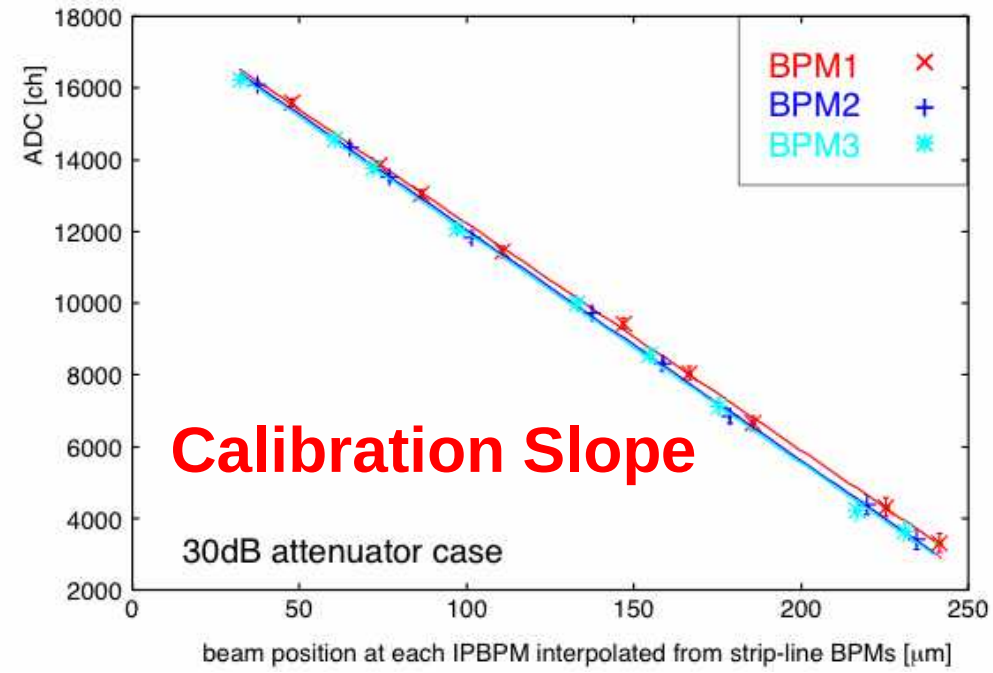

Slope vs Attenualtion

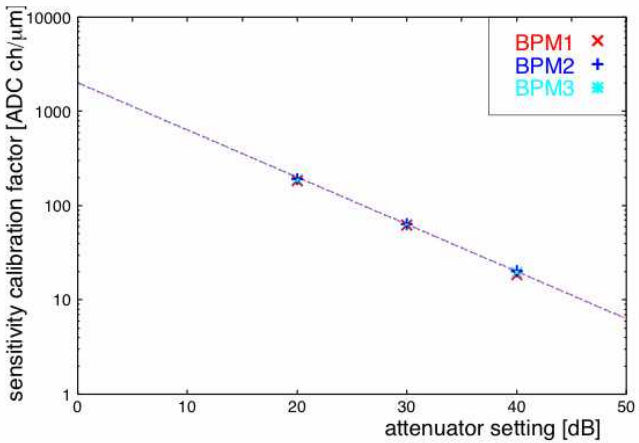

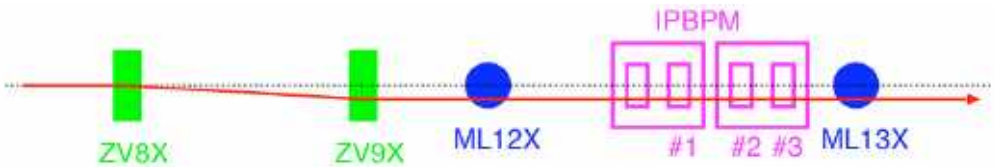

- Swept the beam parallel and calibrated the I signals (ADC ch) to beam displacement
- The variable attenuator was 40dB, 30dB, & 20dB
- Estimated the calibration slope for 10dB, 0dB

3, Resolution Run

Residual of (Y2I – Y2I$_{predicted}$)

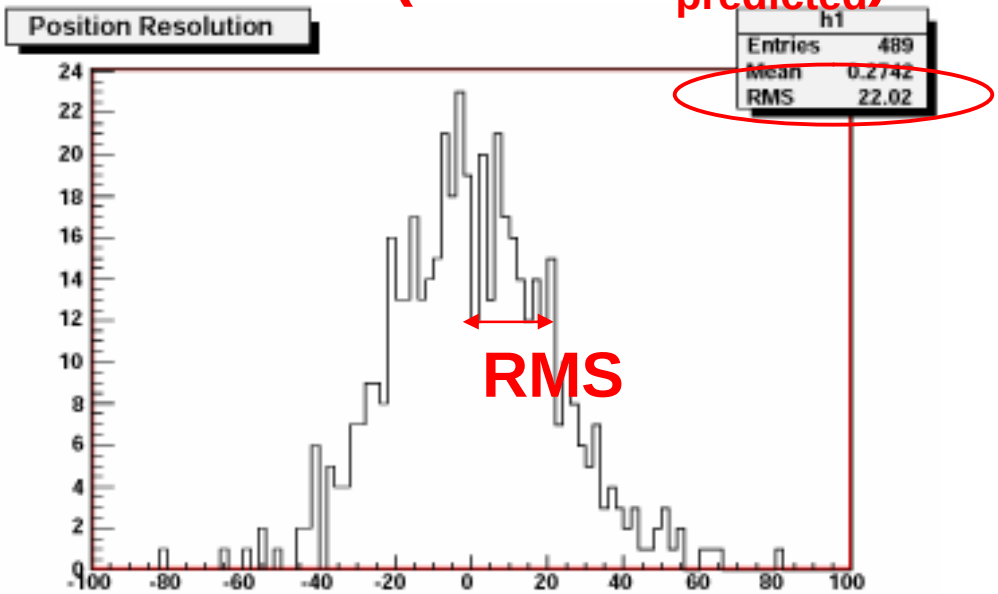

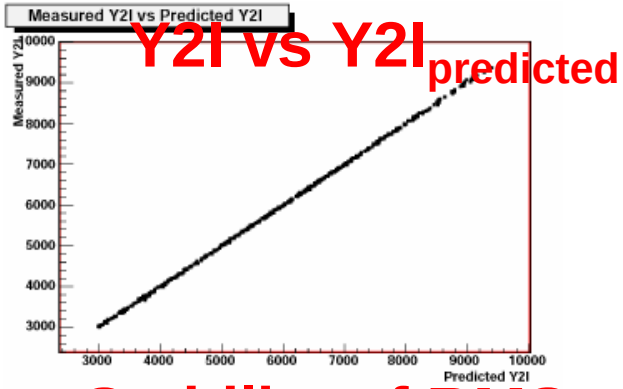

Stability of RMS

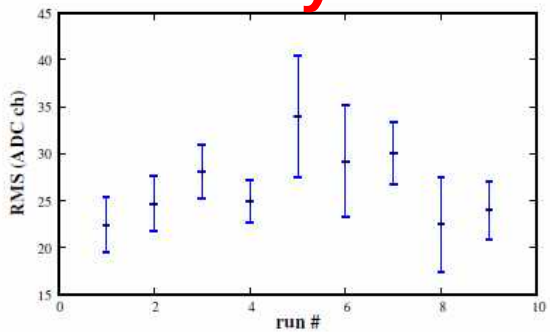

Data Cut

- 0.640 < ICT < 0.755 (*1.6nC)
- 3000 < Y1I,Y2I,Y3I < 13000 (ch) ⟷ 4.96 um dynamic range

Linear Regression Analysis

$$Y2I_{predicted} = \alpha_0 + \alpha_{Y1I} * Y1I + \alpha_{Y1Q} * Y1Q + \alpha_{Y3I} * Y3I + \alpha_{Y3Q} * Y3Q + \alpha_{Yref} * YREF + \alpha_{X1I} * X1I + \alpha_{X1Q} * X1Q + \alpha_{X3I} * X3I + \alpha_{X3Q} * X3Q + \alpha_{Xref} * XREF$$

4, Position Resolution

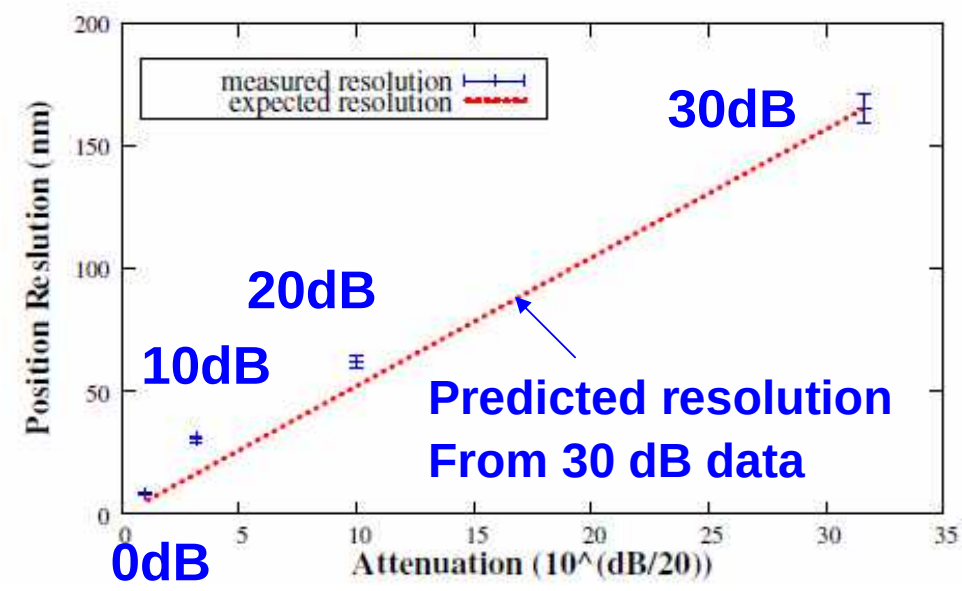

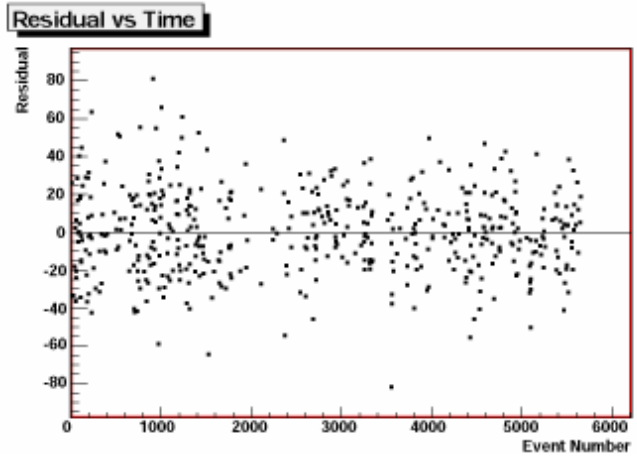

Residual vs Time

Resolution =

geo_factor x (RMS of residual (ADC ch) / calibration slope (ADC ch/nm))

Position resolution for 1 hour run: **8.72 +- 0.28 (stat.) +- 0.35 (sys.) nm**

(ICT = 0.68 x 10^{10} e^-/bunch, dynamic range = 4.96 um

At ATF2 condition (10^{10} e^-/bunch), **5.94 nm**

Stable enough for 1 hour

1, Introduction of ATF2

2, Introduction of IP-BPM

3, Position resolution measurement

4, Summary

Summary & Tasks

- ATF2 requires nanometer beam control at the Interaction Point (IP)
- We developed a cavity BPM for the IP, and achieved 8.72 nm position resolution, stable for 1 hour, at condition of 0.7×10^{10}(e^-/bunch)
- To achieve 2 nm resolution,
  - Reduce signal loss (Install detecting scheme as near as possible)
  - Reduce noise from support flame and so on (Install interferometer)
  - Achieve lower emittance beam at ATF

Noise of Electricity

Resolution Run

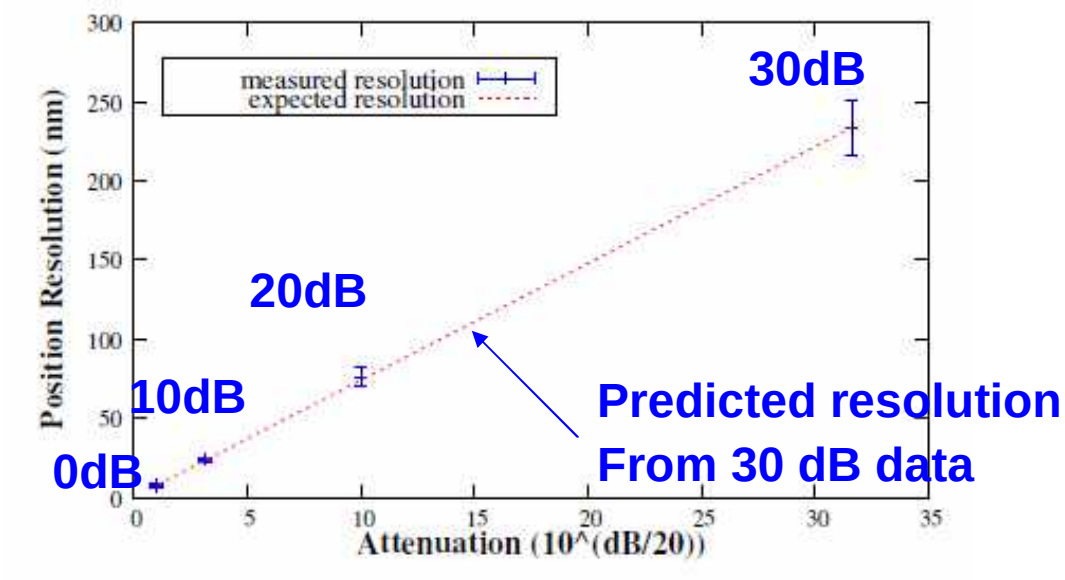

Setup

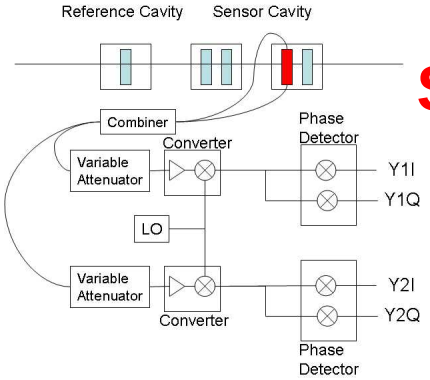

Calibration Run

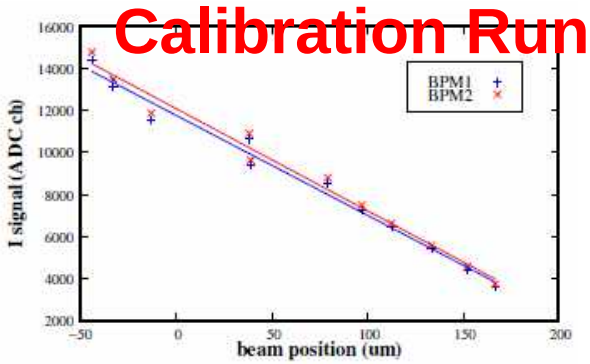

The position resolution is limited by the thermal noise of electricity.

Thermal noise:

7.73 +- 0.30 (stat.) +- 0.50 (sys.) nm

At ATF2 condition (1010 e-/bunch), **3.46 nm**

6.89 nm noise still left