Cavity Package for STF Phase - 2

STF Phase-2 & GS1 Package

	Phase-1	Phase-2
Cavity Length	1258mm	1247mm
Beam Pipe	ϕ84mm	ϕ80mm
HOM Coupler	Machining	Deep Drawing Hydro-forming
HOM Orientation	Left–Right Symmetric	Up-Down Sym.
He Jacket End-cone	Machining	Press-forming
Tuner Position	Between Supports	Outside of Supports
Input Coupler	Fixed Coupling	Tunable

Improvement in the STF Baseline Cavities

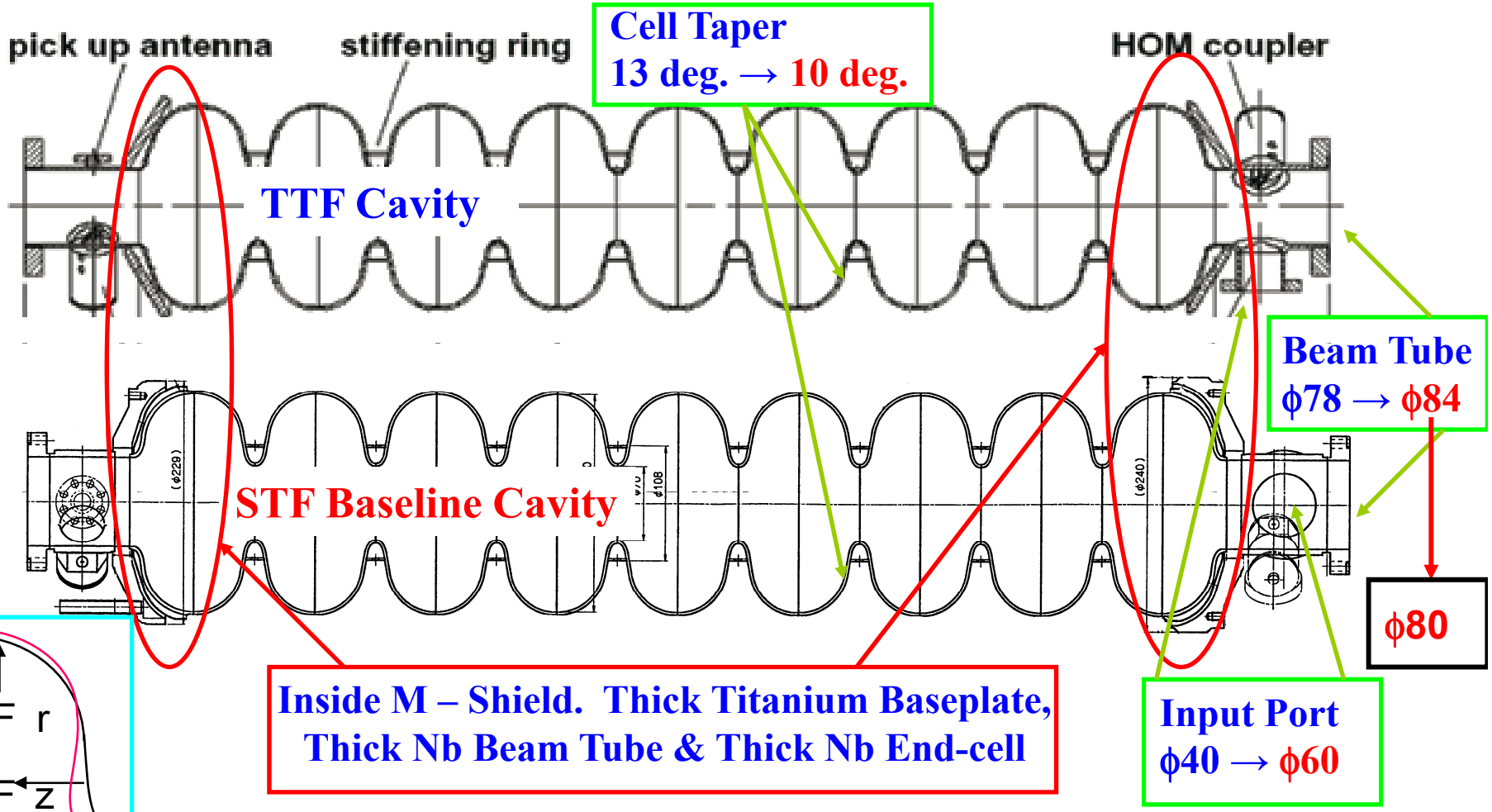

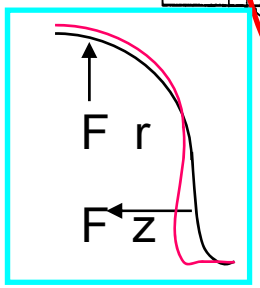

	STF Baseline Cavity	TTF Cavity	
Stiffness of Cavity			
Fixing Support	72 kN/mm	22 kN/mm	
Lorentz Detuning	-520 Hz	-870 Hz	(31.5 MV/m)

Fabrication of STF Baseline Cavities

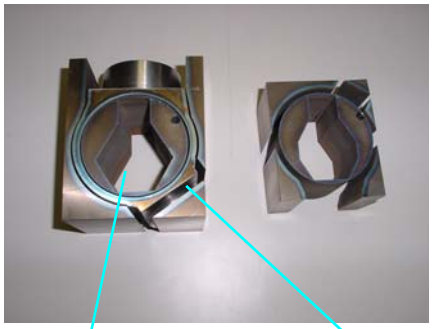

HOM coupler

End-groups

Center-cells
(Tokyo Denkai ; RRR~300 Nb)

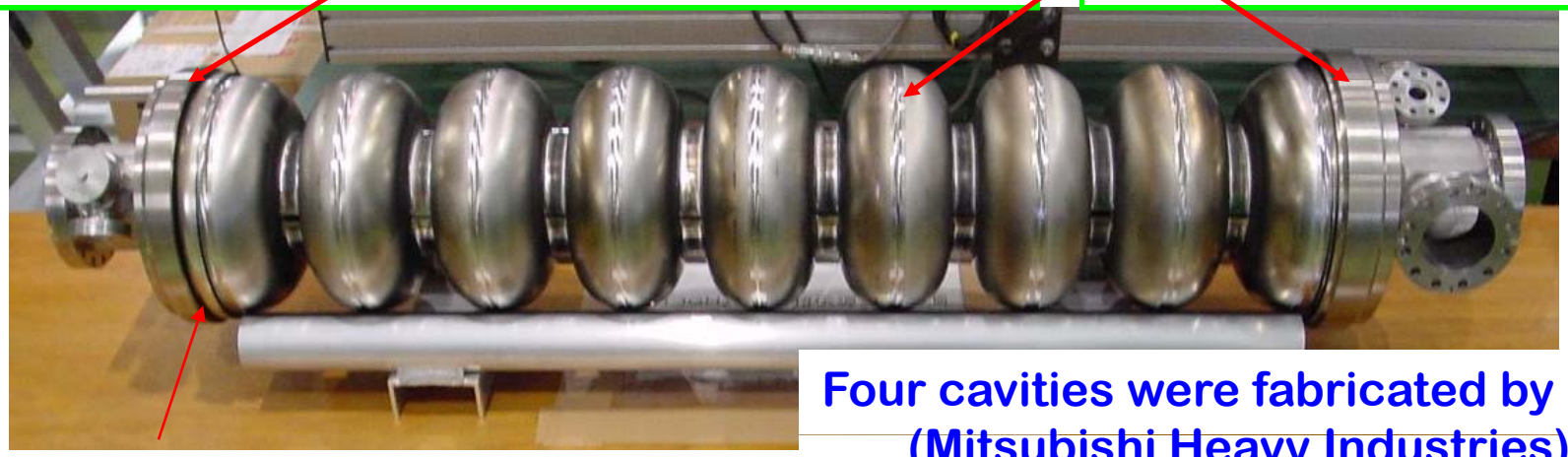

Magnetic Shield

Four cavities were fabricated by MHI
(Mitsubishi Heavy Industries)

Deep-drawing of Pipes

Fe

Al

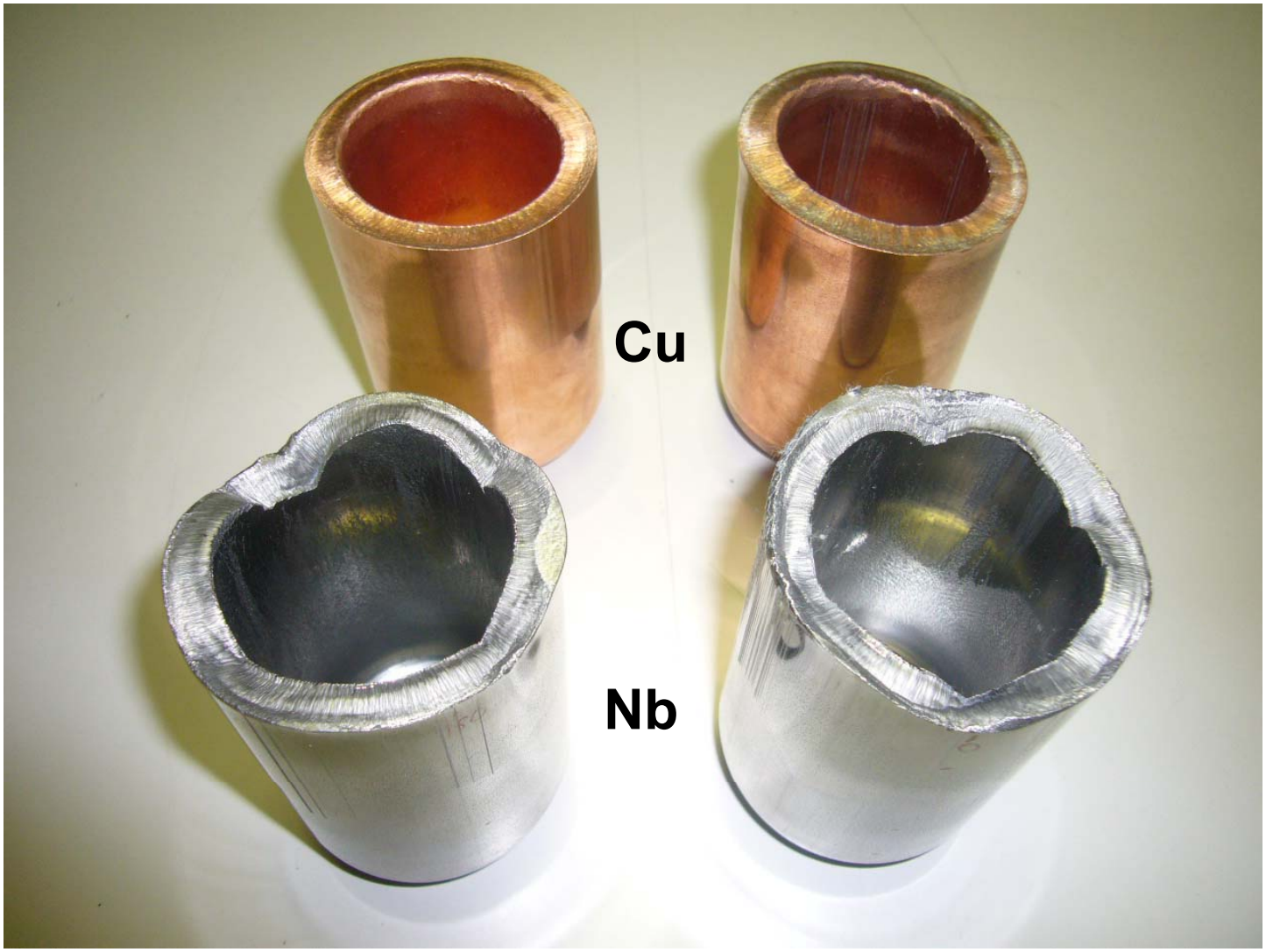
Cu
Nb

Hydroforming of Coupler Port

Niobium

Niobium

New Tuner Configuration

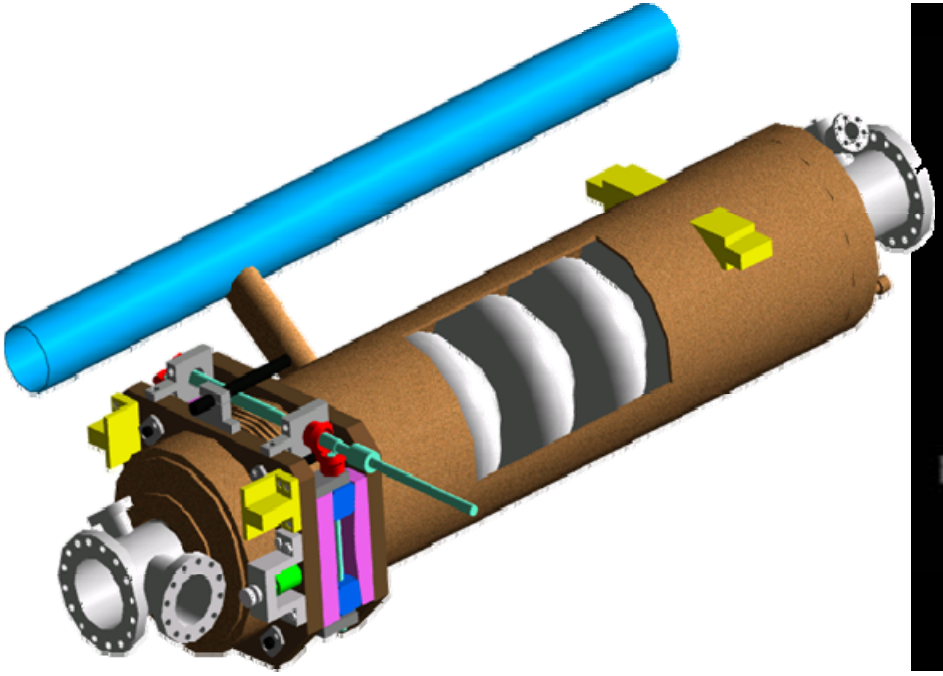

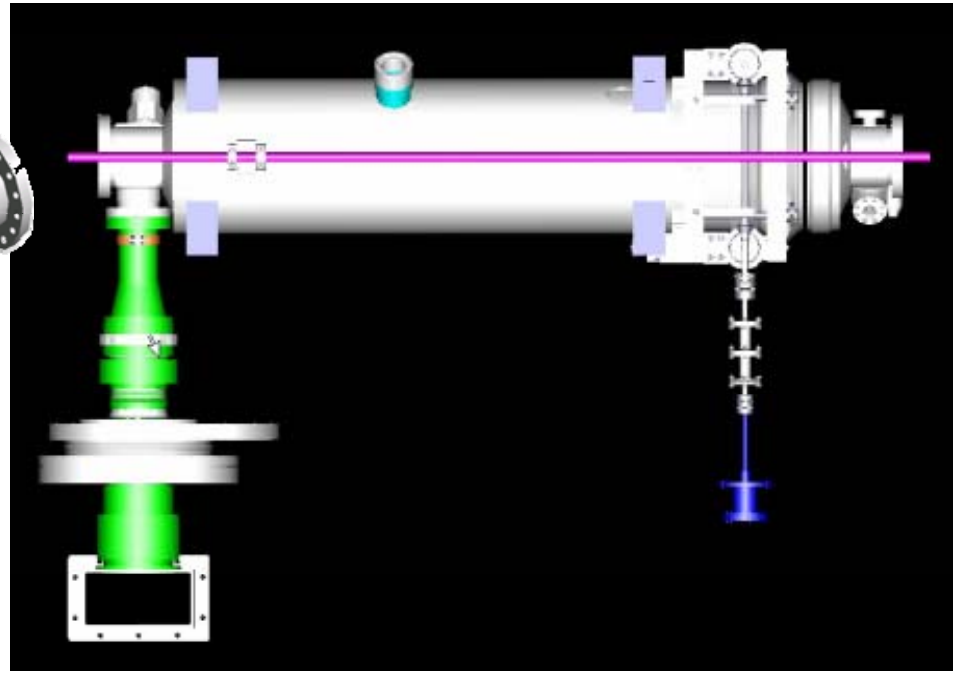

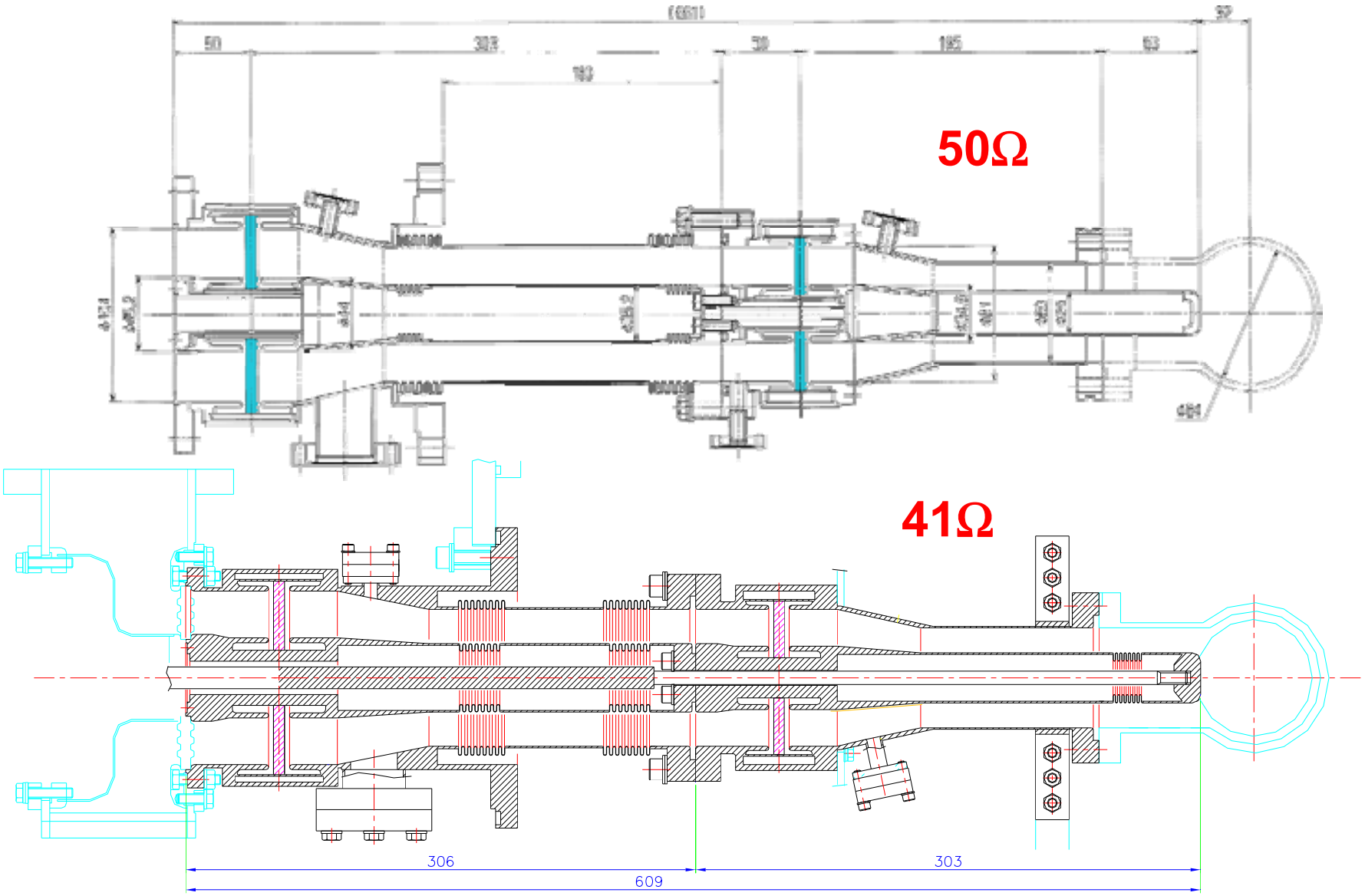
50Ω
41Ω
306
303
609

Tesla-like STF Baseline Cavity Package

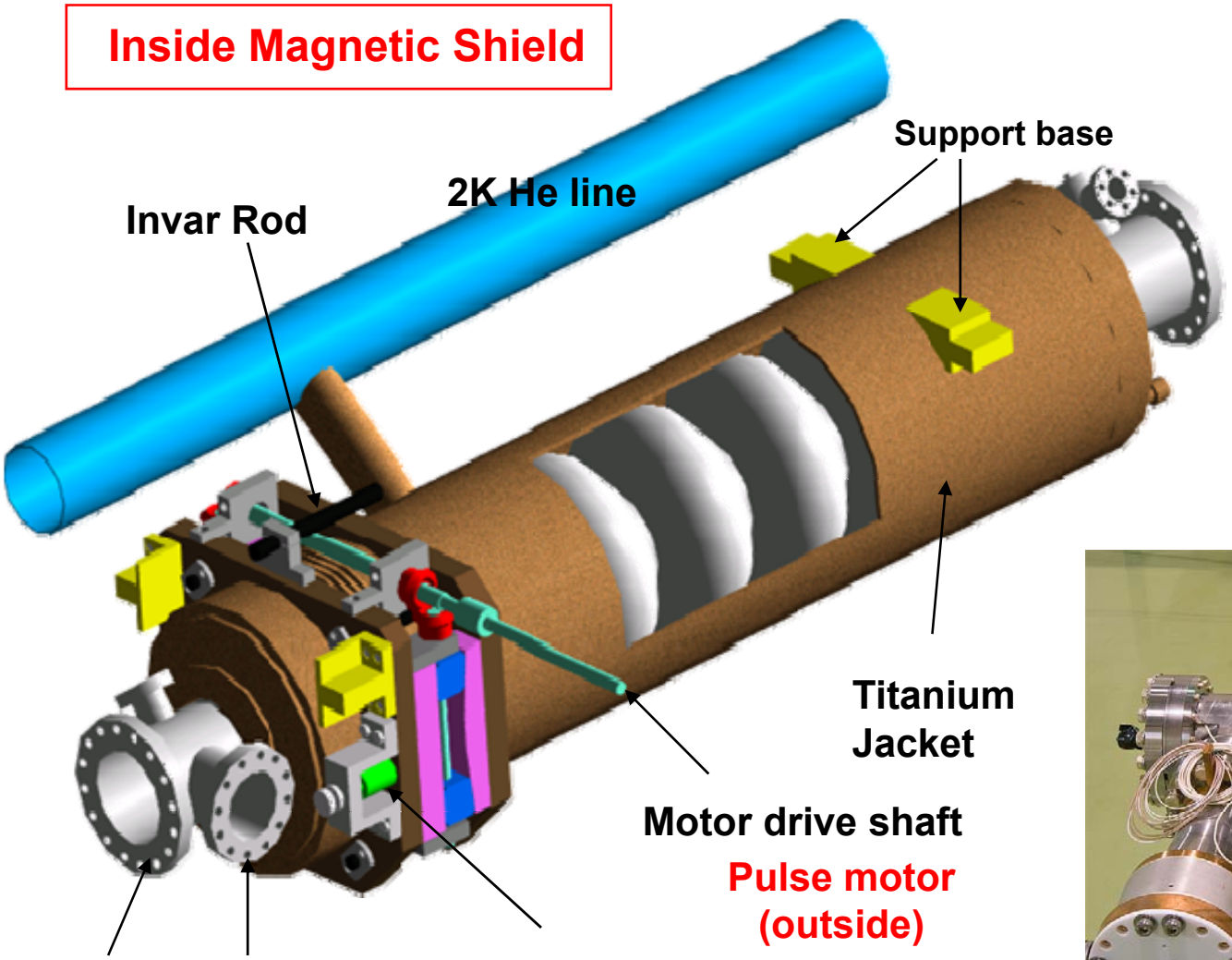

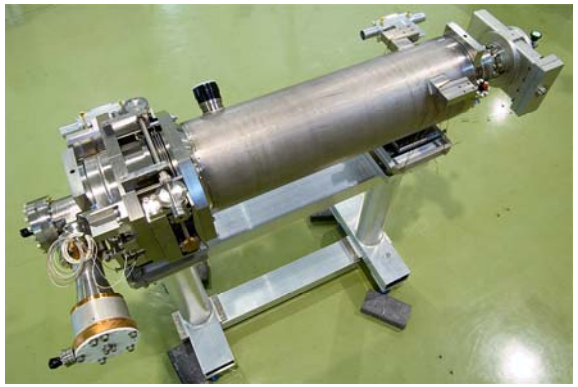

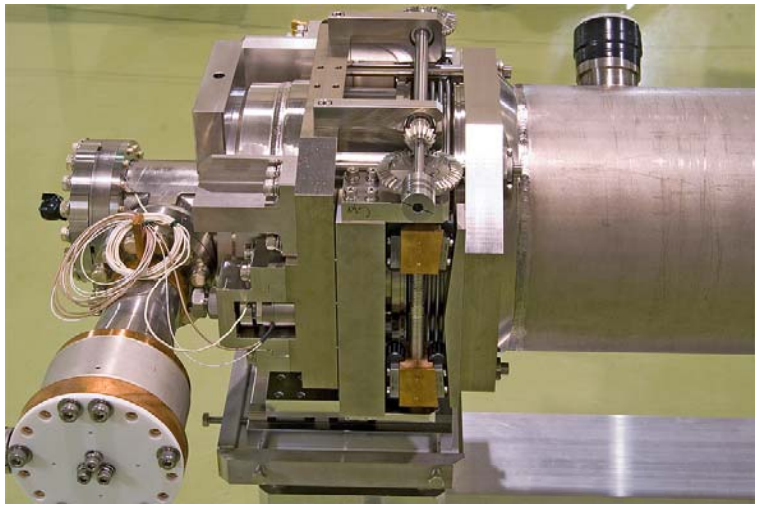

Slide Jack Tuner

Input Coupler for STF Baseline Cavities

Improved design for simplicity with no tuning mechanism.

TRISTAN Type Coaxial Disk Ceramic ;

(KEKB 1 MW/cw, JPARC-ADS 2.2 MW/pulse, SNS)

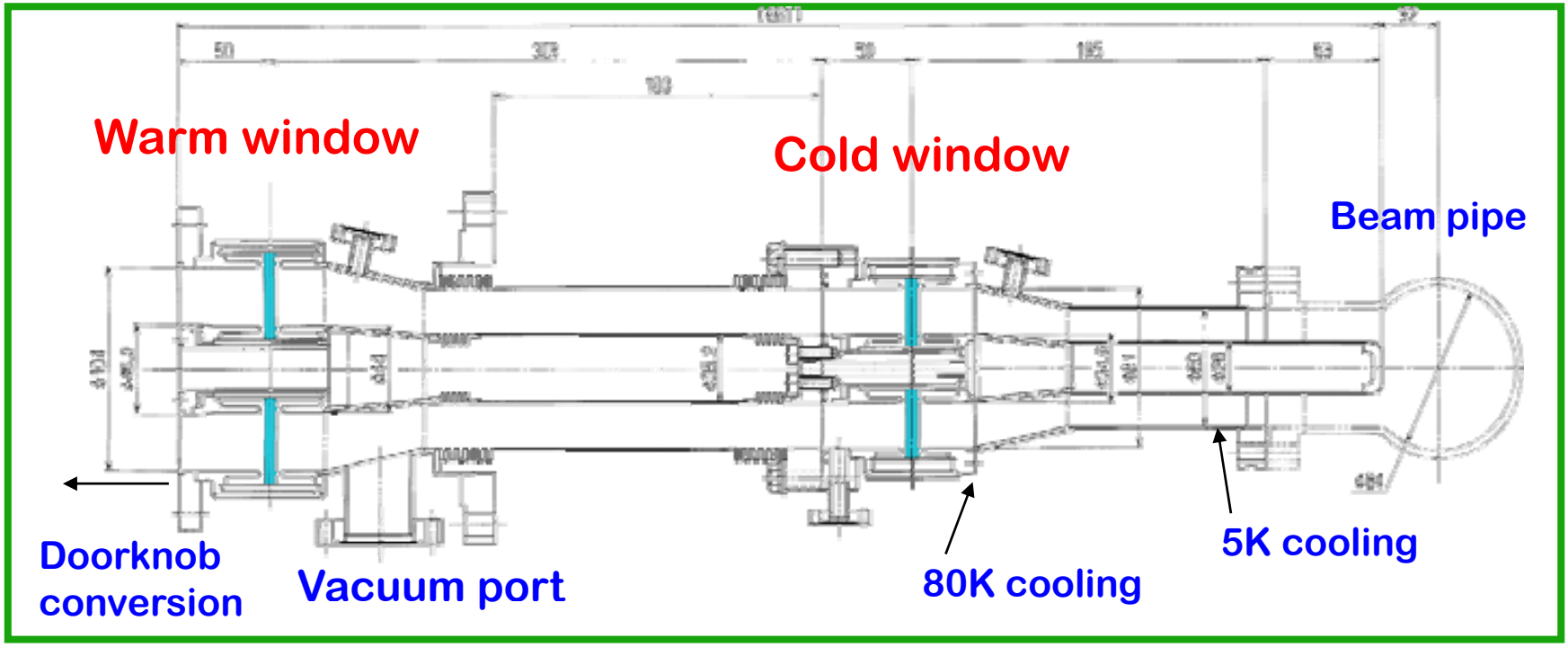

	80 K	5 K	2 K
Static Loss	5 W	1.1 W	0.05 W
Dynamic Loss	3 W	0.2 W	0.03 W