Current status of Shintake Monitor for ATF2

Outline

Quick introduction of Shintake monitor for ATF2

Expected performance for the 37 nm beam

Commissioning status and schedule

Yoshio Kamiya, Takashi Yamanaka, Masahiro Oroku, Youhei Yamaguchi, Taikan Suehara, Sachio Komamiya, Yosuke Honda, Tatsuya Kume, Toshiyuki Okugi, Toshiaki Tauchi, Nobuhiro Terunuma, and Shintake Monitor group

Schematic drawing of Shintake monitor

Shintake monitor is currently the only demonstrated monitor that can measure a sub-micron or less beam size.

target characteristics
- laser based target --- non-destructive
- interference fringes --- very fine, periodical structure

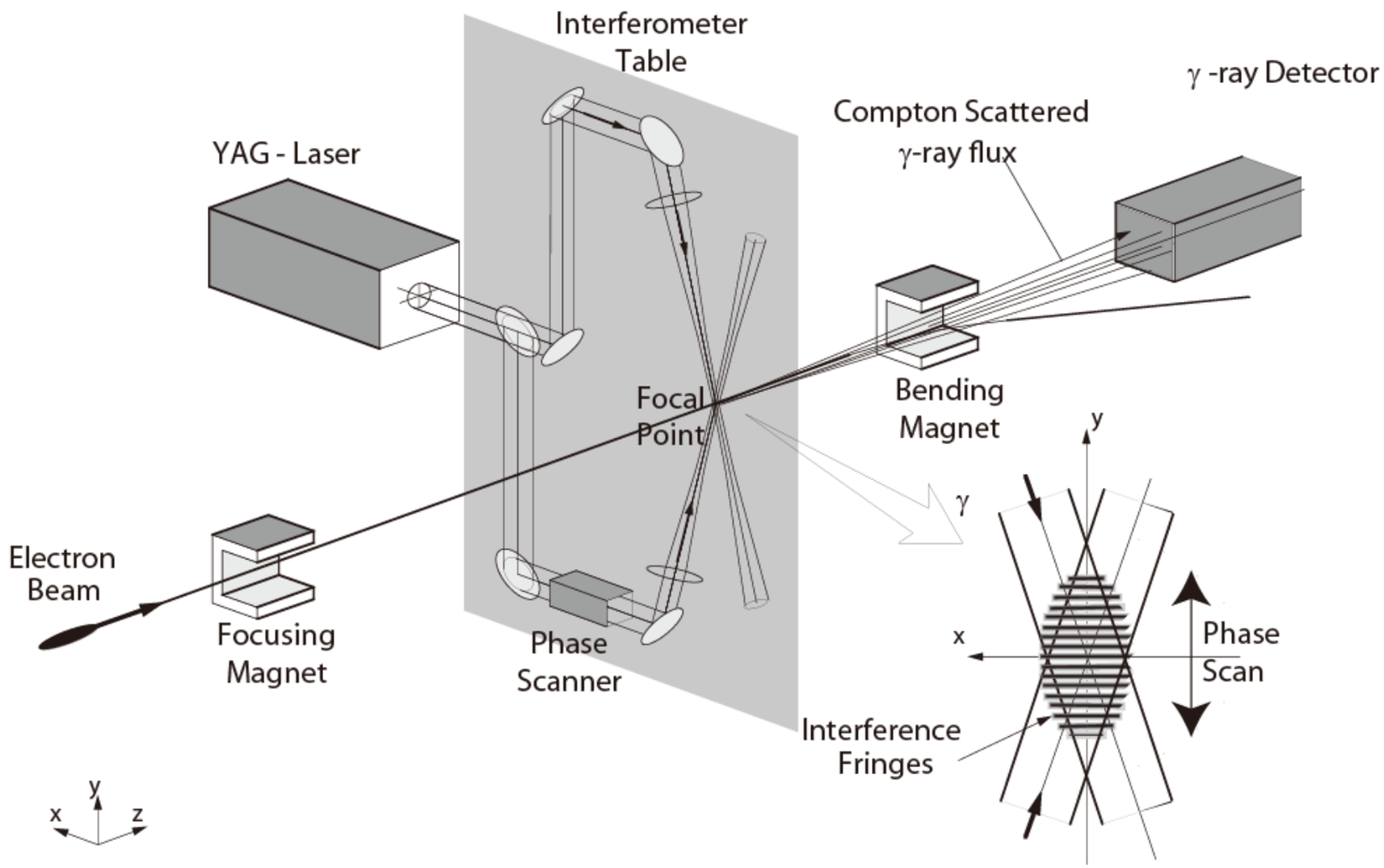

How to analyze the gamma-ray intensity

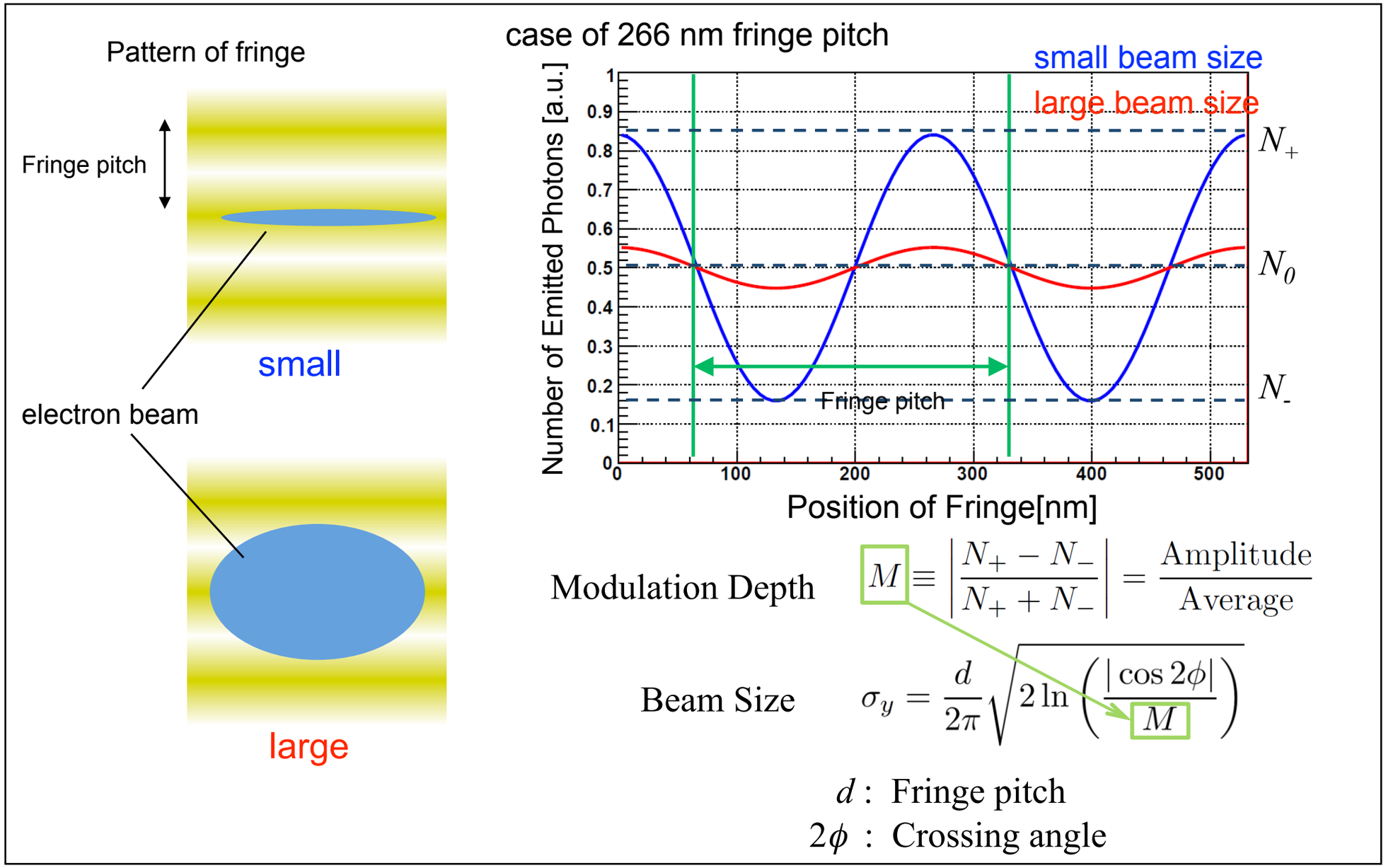

note:
Sensitivity of the beam size measurement is evaluated by a derivative of the function. It shows the sensitivity get worse when the beam is too large or is too small. Several fringe pitches are needed to cover the wide dynamic range.

Optics design for ATF2 (wide dynamic range, from several micron to 20 nm)

2 deg. mode
(1 - 6 microns)

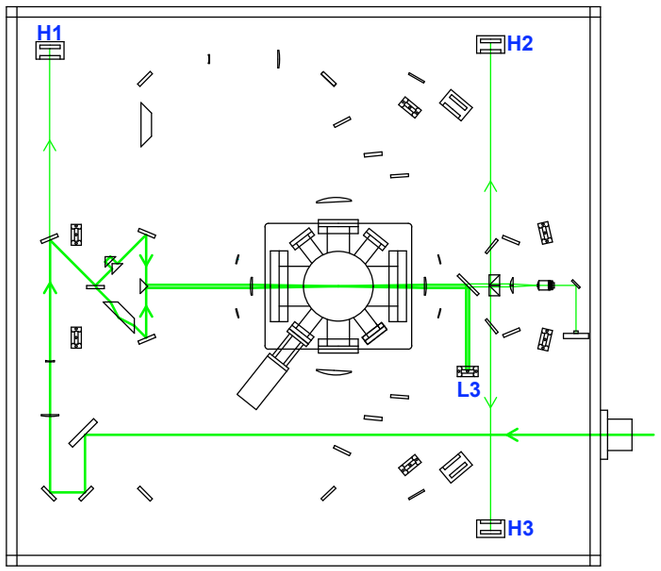

8 deg. mode
(0.3 - 2 microns)

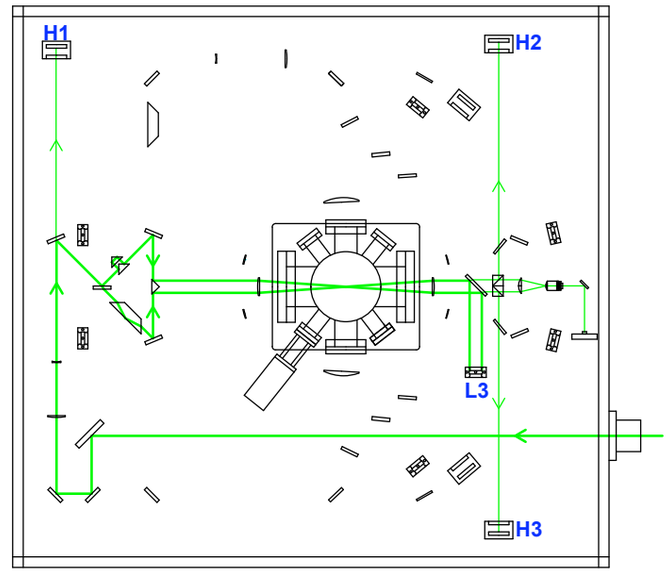

laser wave length of 532 nm

to see small beam size of several tens of nm

four crossing mode for vertical

one laser wire mode for horizontal

30 deg. mode
(80 - 400 nm)

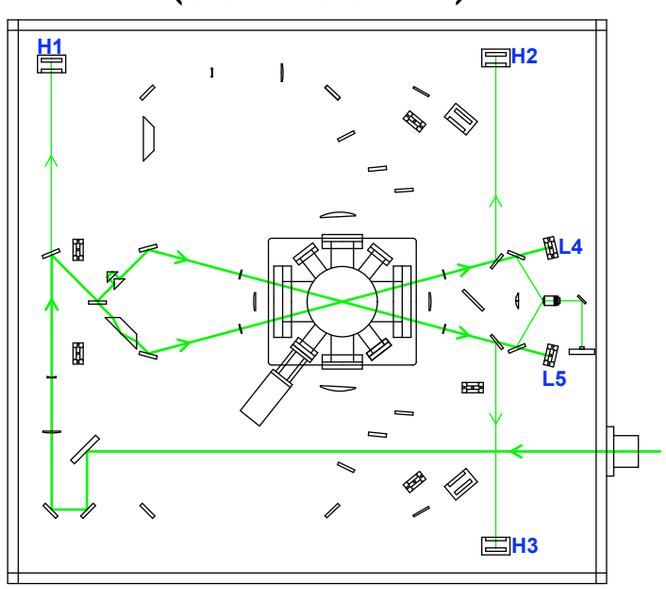

174 deg. mode
(20 - 100 nm)

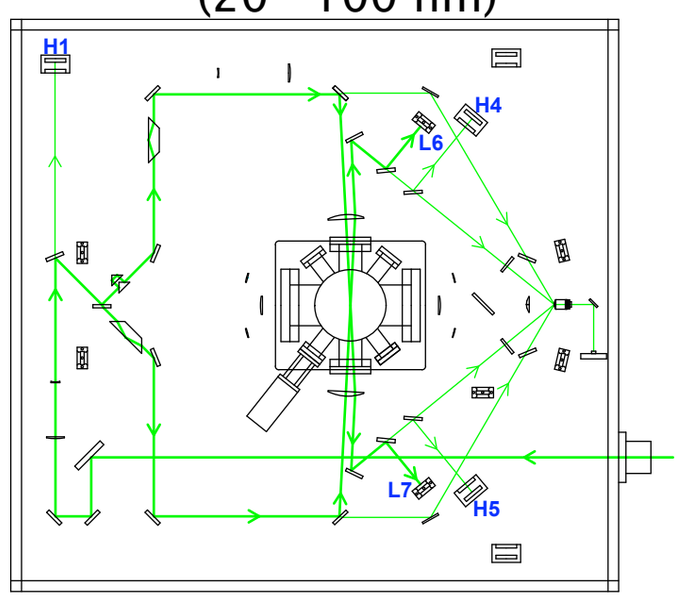

laser wire mode
(3 microns)

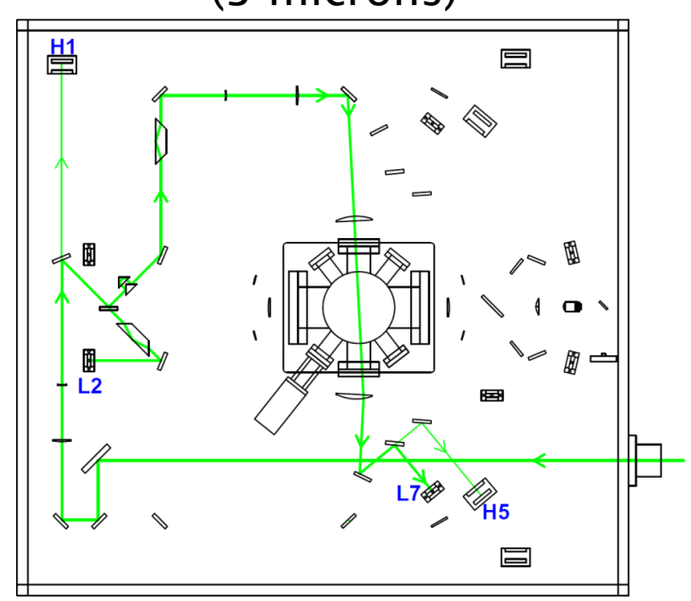

Optics design for ATF2 (wide dynamic range, from several micron to 20 nm)

2 deg. mode
(1 - 6 microns)

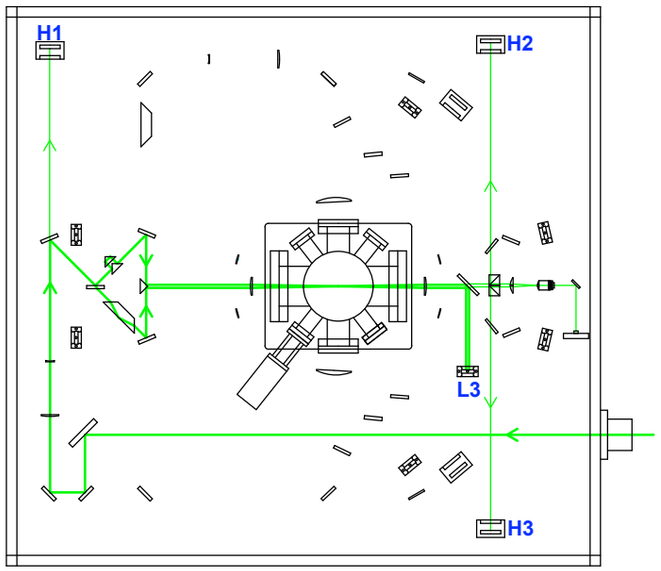

8 deg. mode
(0.3 - 2 microns)

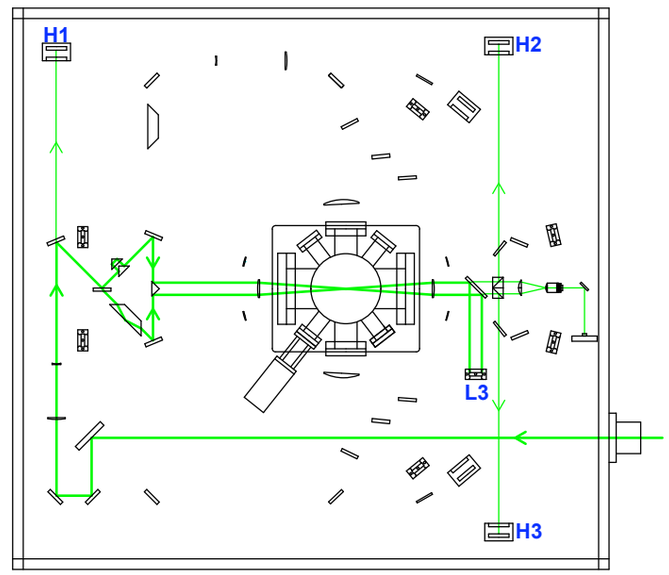

laser wave length of 532 nm

to see small beam size of several tens of nm

four crossing mode for vertical

one laser wire mode for horizontal

30 deg. mode
(80 - 400 nm)

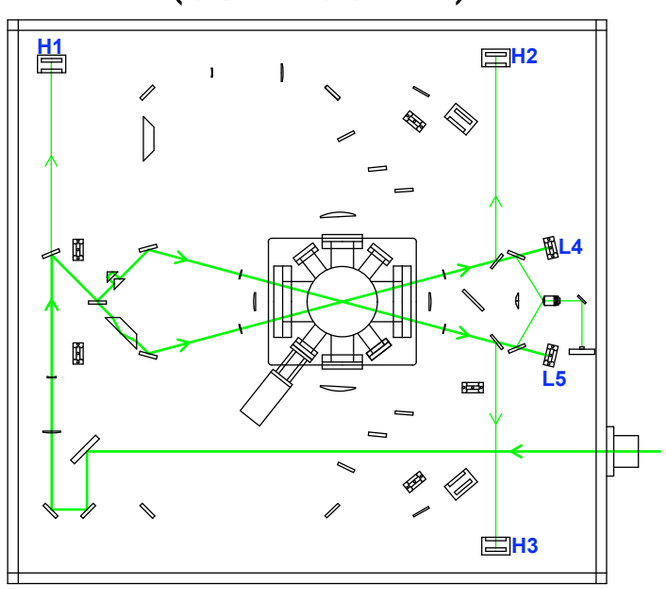

174 deg. mode
(20 - 100 nm)

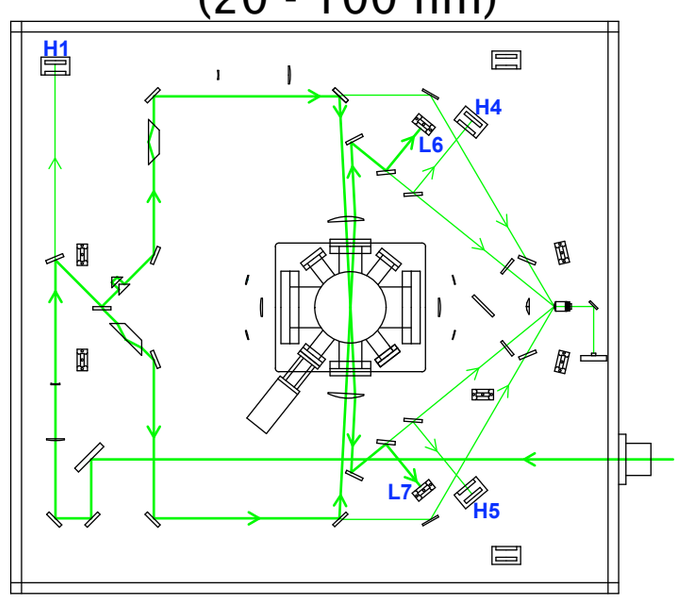

laser wire mode
(3 microns)

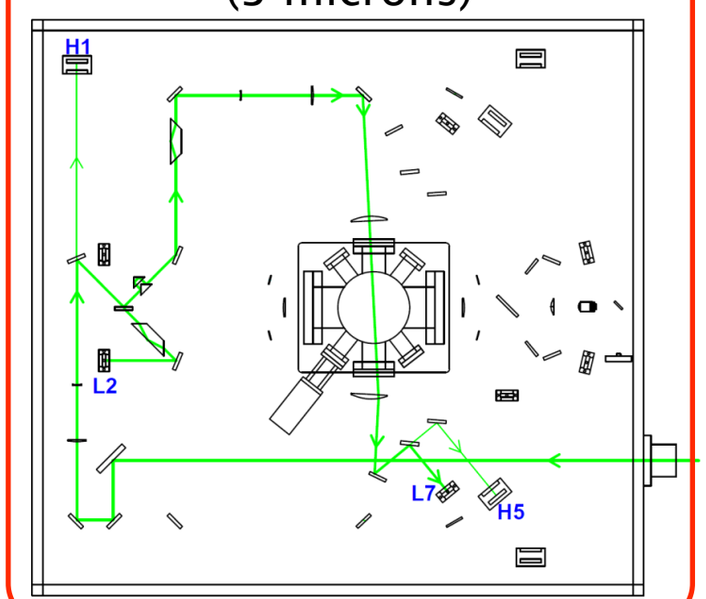

Laser system

Q-switched Nd:YAG laser
(GCR-3 Spectra Physics)

Wavelength:
532 nm (2nd Harmonics)

Pulse duration:
8 nsec (FWHM)

Repetition frequency:
variable (2-15 Hz)

Pulse energy:
400 mJ/pulse

Pointing stability:
10 micro-rad

Line width:
< 0.003 cm^-1

optics in the laser hut

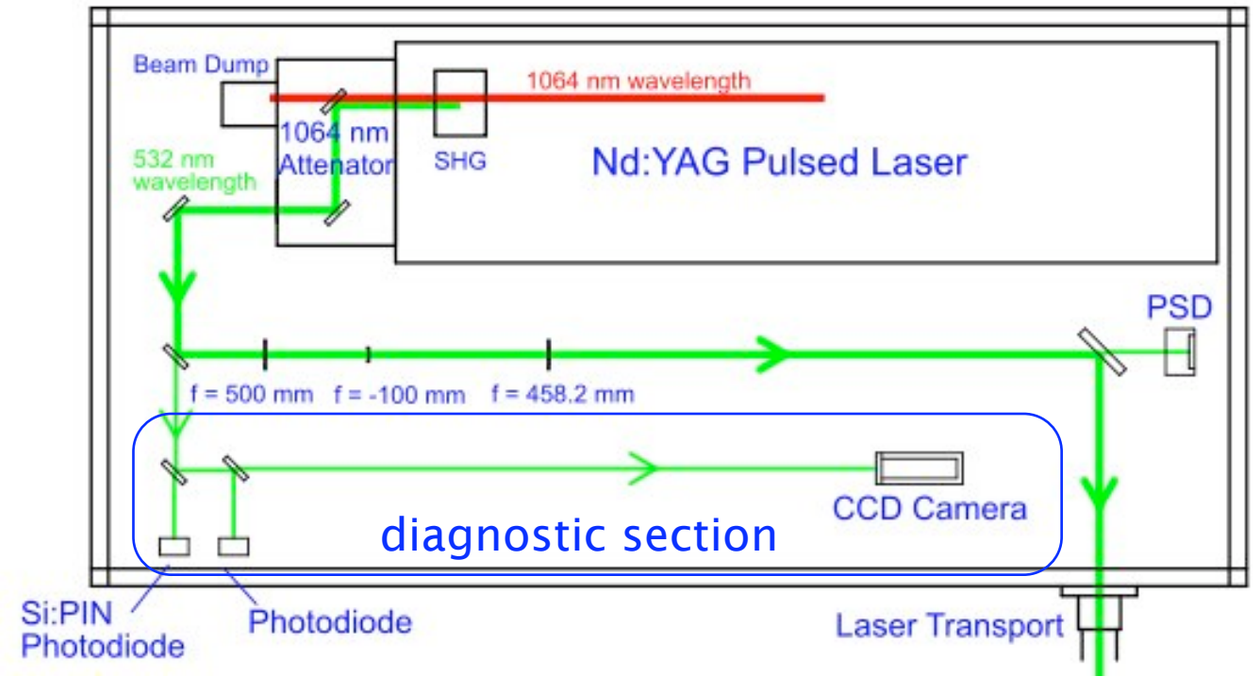

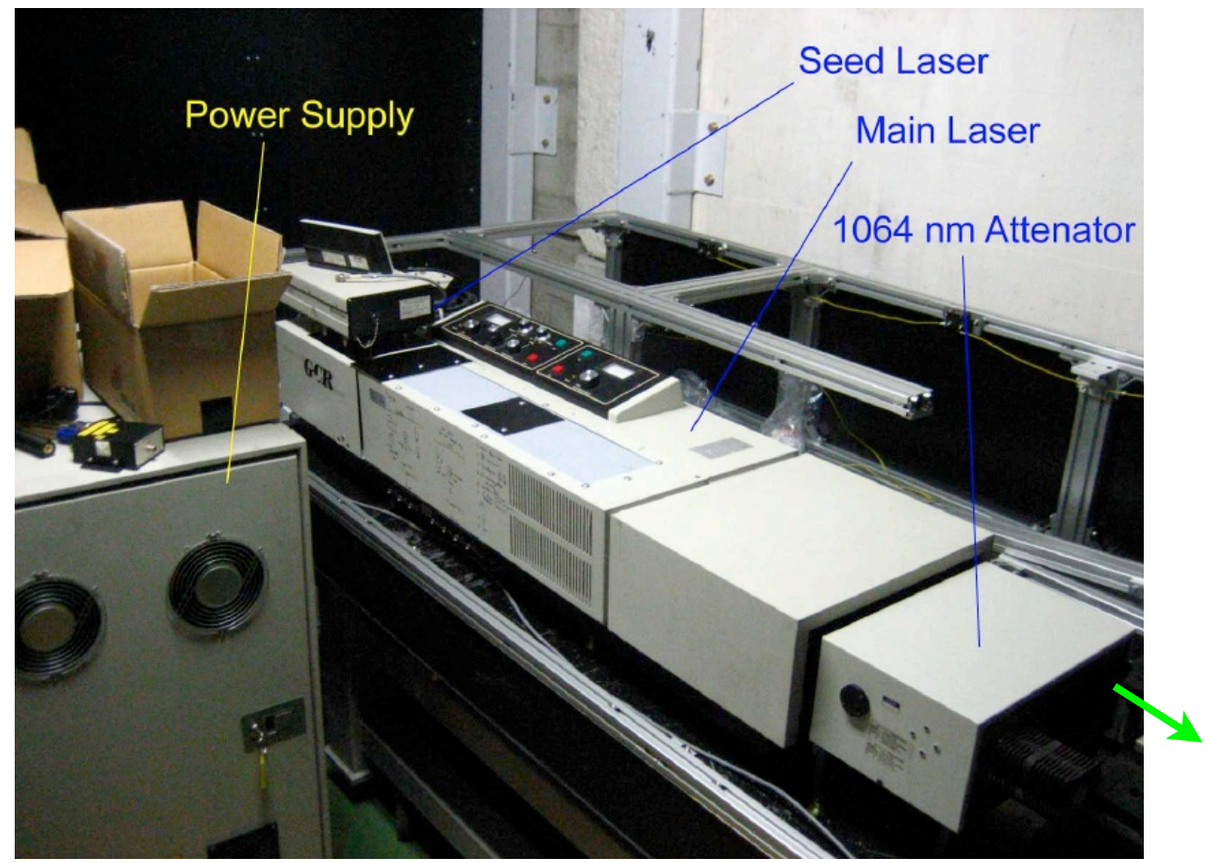

Main optical table

Size: 1.7 x 1.6 m^2
Several tens of optical elements

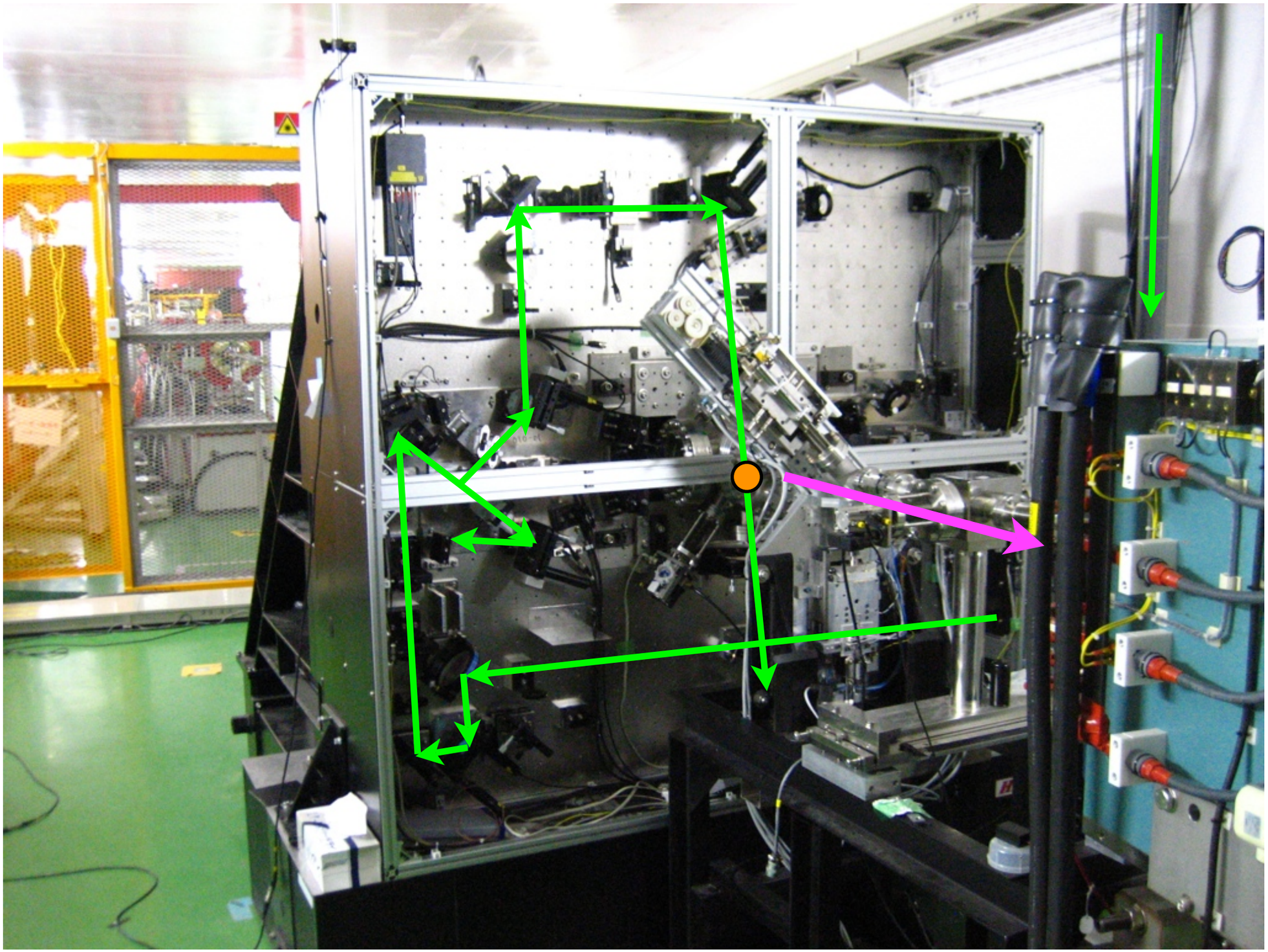

Gamma-ray detector

adopted a multilayer structure and a shower shape analysis

Scintillator: CsI(Ti)
Density: 4.51 g/cm^3
Size: 10 x 5 x 33 cm
4 front layers of 1 cm thickness
rear block of 29 cm thickness

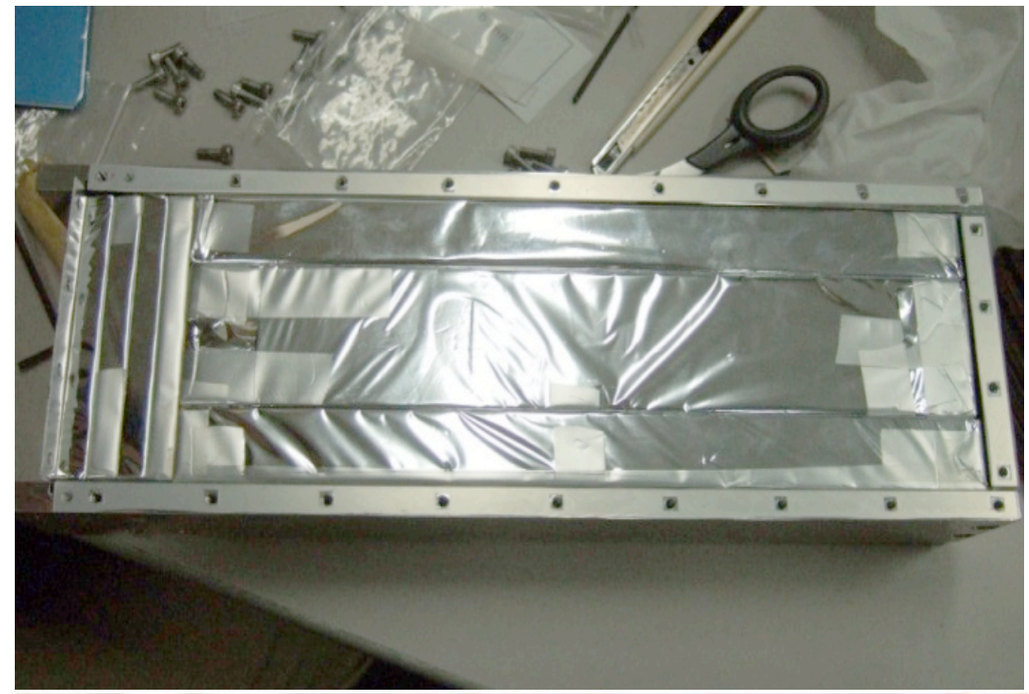

PMT: R7400U (Hamamatsu)
Photocathode: Bialkali
Photocathode area: 8 mm in diameter
Typical gain: 7x10^5
Directly attached on the Scint.

Simulated signal modulation (Performance estimation)

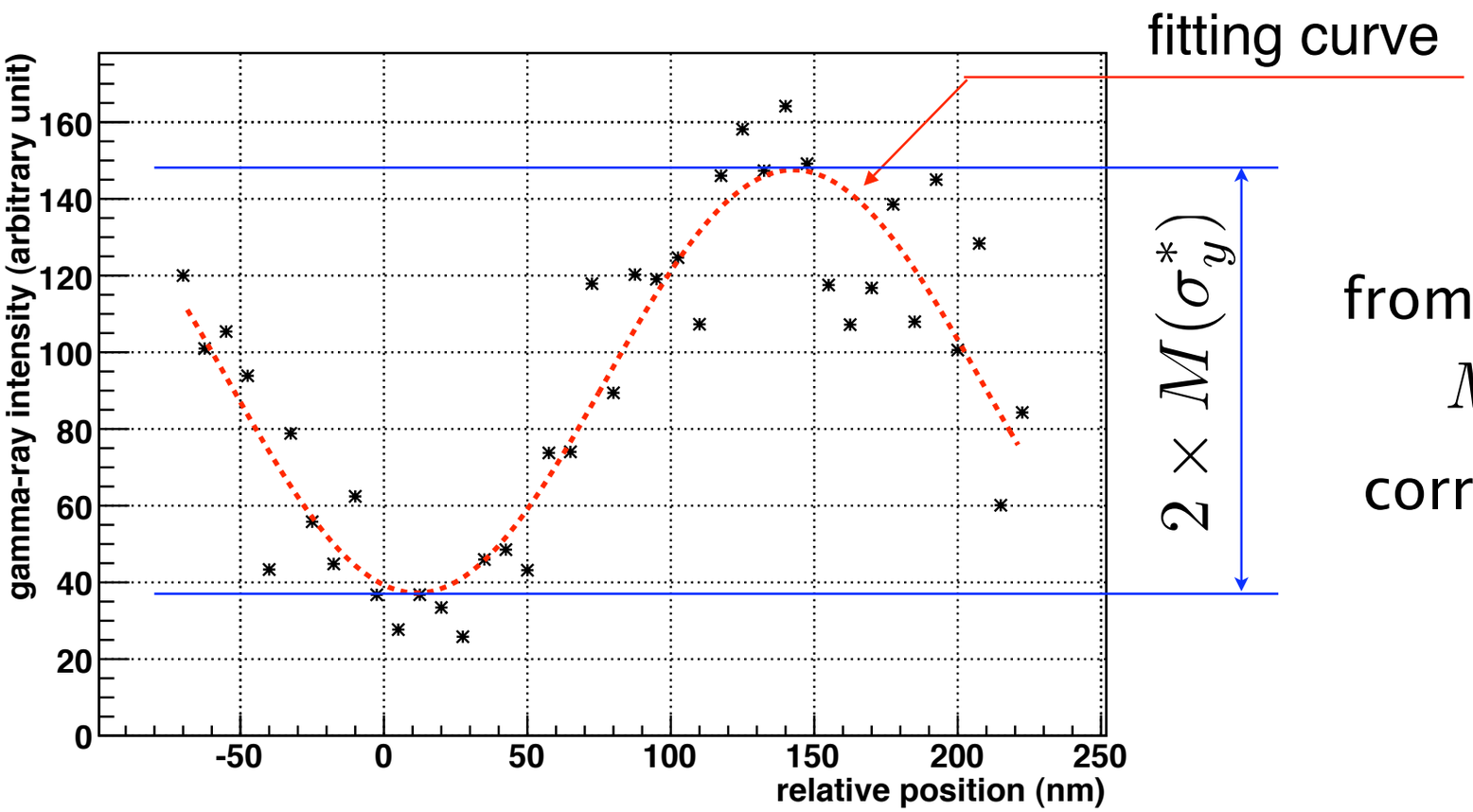

from this fitting curve

$$M(\sigma_y^*) = 0.6$$

corresponds to $\sigma_y^* = 38.3$ nm

Two kinds of error sources:

A. Jittering along vertical axis (gamma-ray intensity) in the scattered plot
(mainly from a detector resolution, electron timing, etc..)

B. Jittering along horizontal axis (relative position) in the scattered plot
(mainly from laser fringe stability, electron position jitter)

Summary of Error sources	before correction	after correction
Error to gamma-ray intensity		
A1. Detector resolution	----	~ 7.5 %
A2. Power jitter		
A2.1 laser power jitter	3 %	1 % (using a photodiode)
A2.2 electron current jitter	9 %	1 % (using an ICT)
A2.2 laser position jitter	4 %	0.5 % (using PSDs)
A2.3 timing jitter		
A2.3.1 laser timing jitter ..... (400 psec for 3.4 nsec pulse duration)	----	0.7 %
A2.3.2 electron timing (fine structure of the laser in order of 16 psec)	----	4 %
		Total 9 %
Error to the relative position (phase)		
B1. phase jitter on laser fringe	16.9 nm	13.5 nm (using phase stabilizer)
B2. electron position jitter	~ 30 nm	8.7 nm (using IP-BPM)
		Total 16 nm for 266 nm pitch

Simulated beam size disribution with the errors

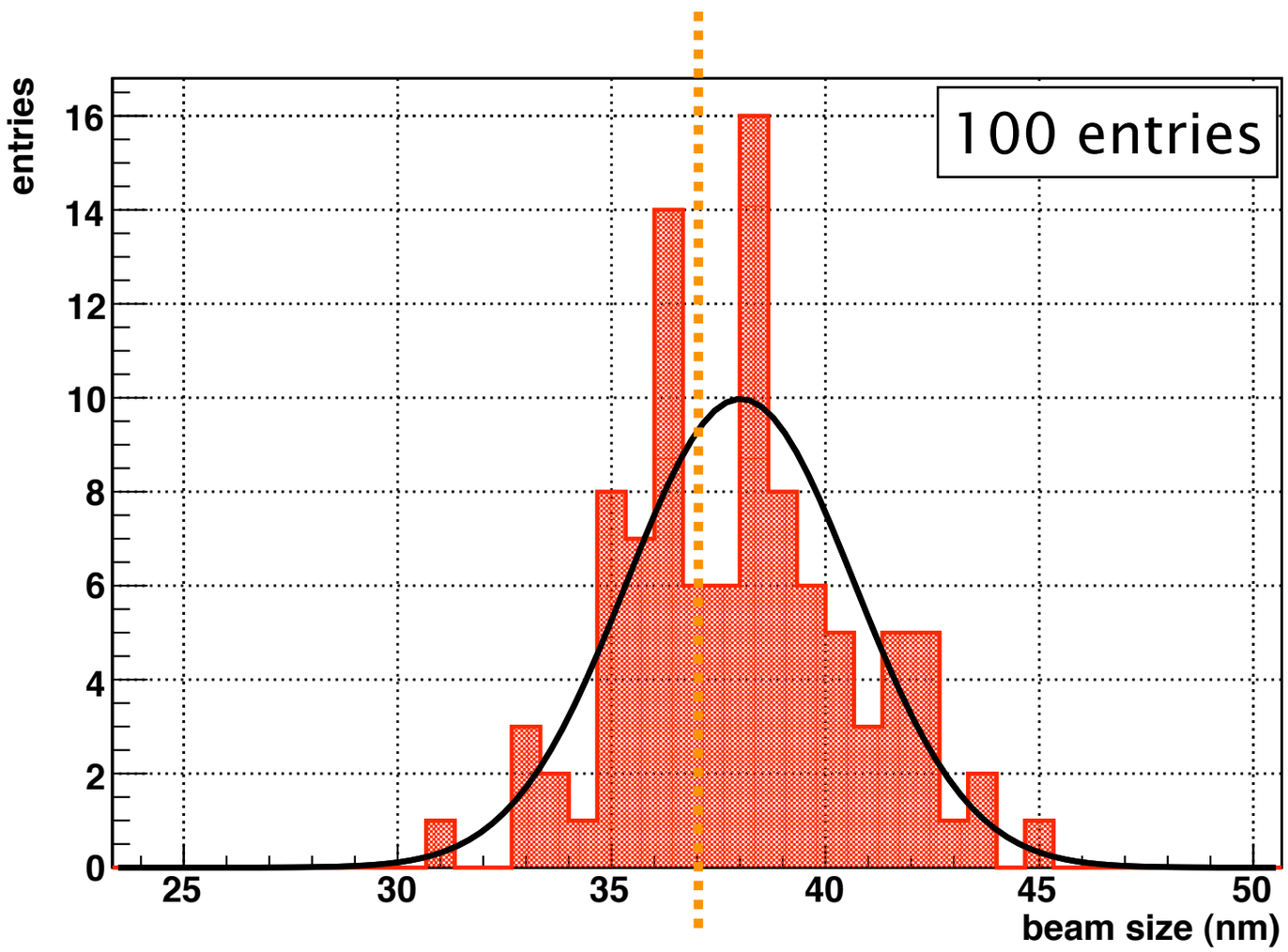

37 nm

estimated beam size:
38 nm

resolution of measurement:
2.7 nm

Another systematic uncertainty: measurement of non-Gaussian beam profile (1)

beam profile for the nominal beam optics
simulated by Glen

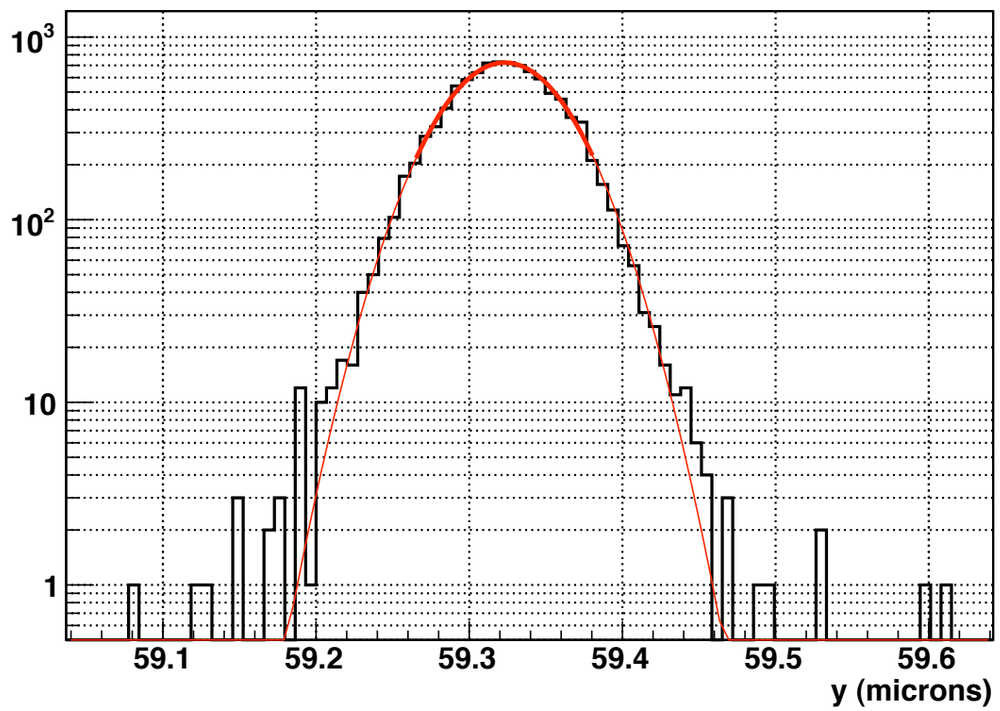

40.1 nm (RMS beam size)

38.2 nm (measured)

37.2 nm (core beam size)

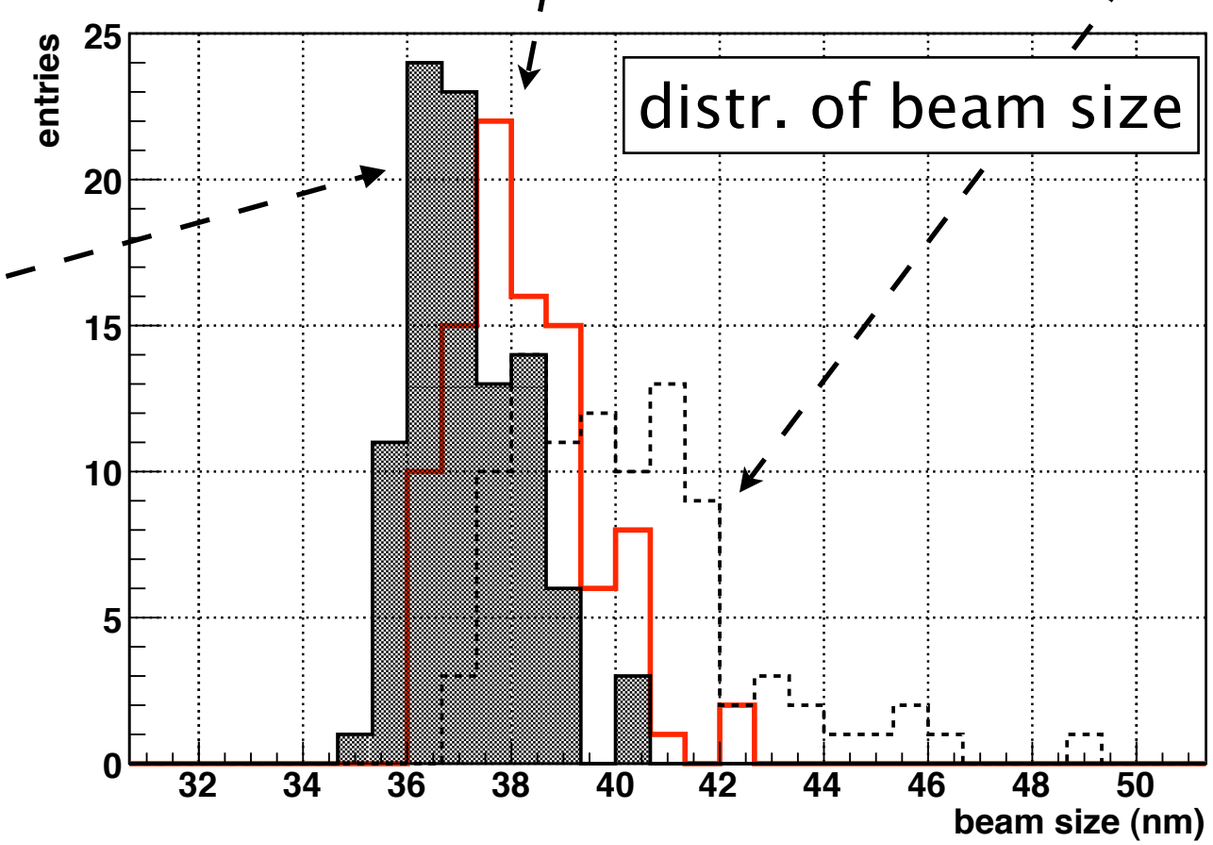

Difference is sufficiently small.

Another systematic uncertainty: measurement of non-Gaussian beam profile (2)

beam profile for the pushed beta optics
simulated by Rogelio

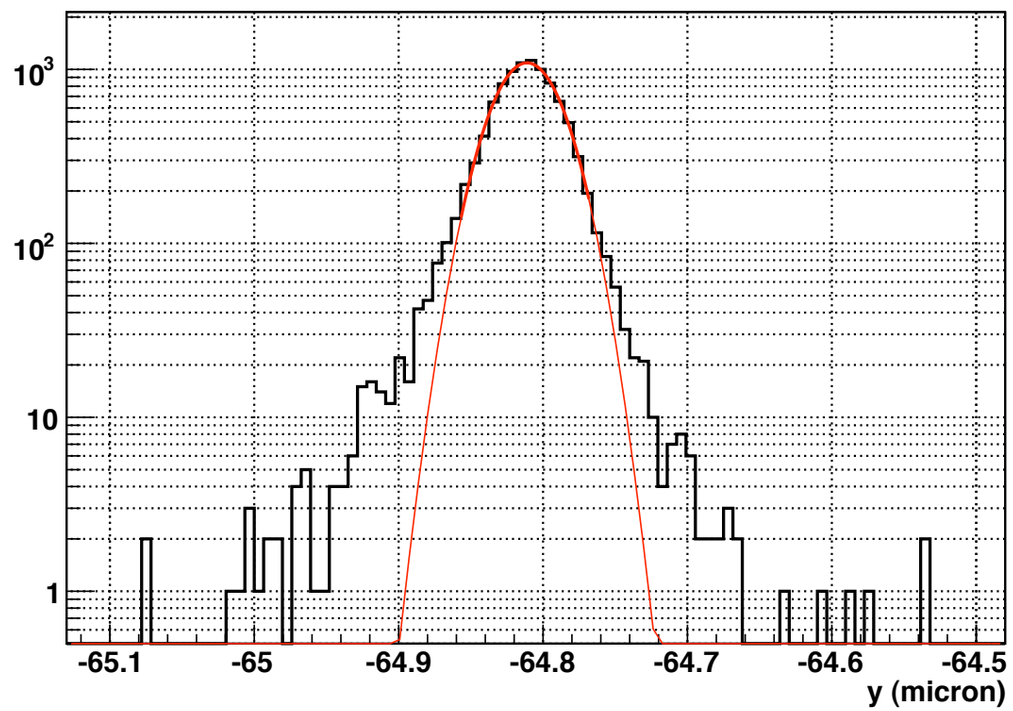

29.8 nm (RMS beam size)

27.7 nm (measured)

23.7 nm (core beam size)

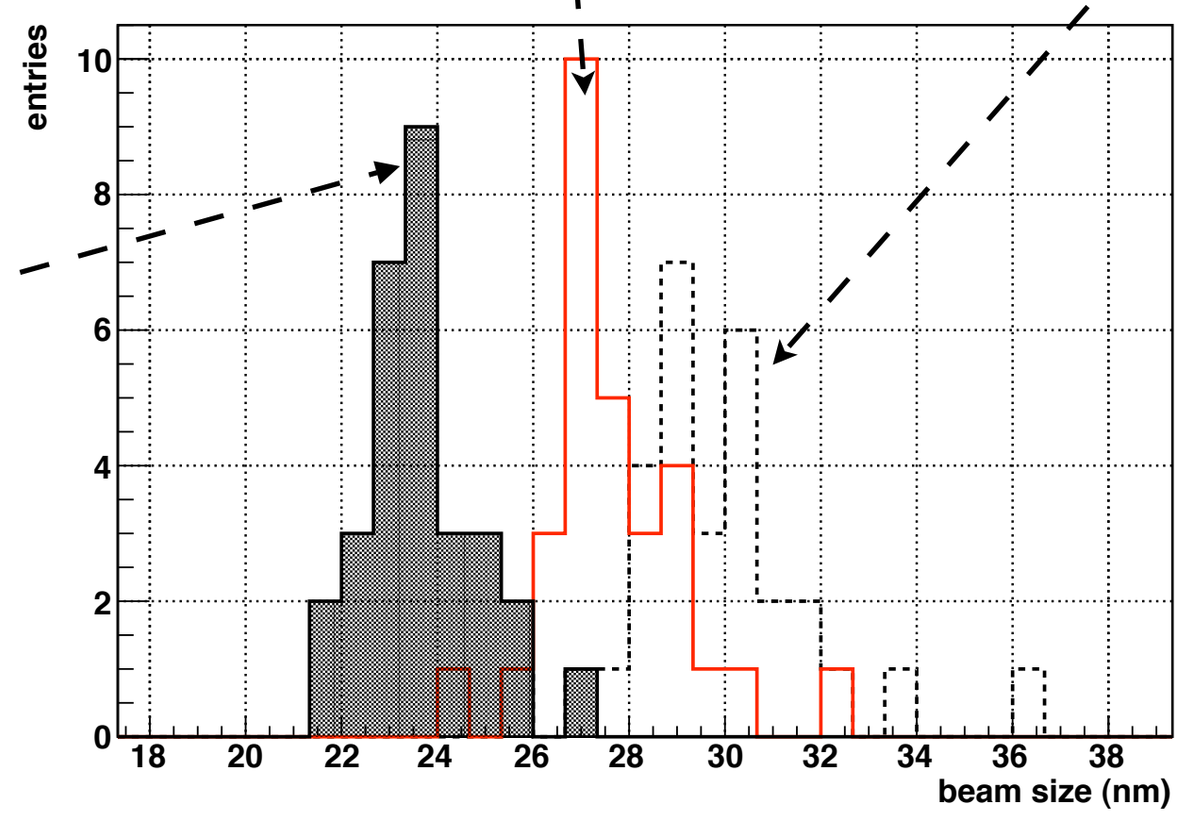

Measured size is between the core size and the RMS size

How to collide (laser wire mode in March)

1. beam orbit tuning from the beginning of the EXT line (6 - 8 hours)
2. beam angle adjustment using two screens (~ 0.5 hours)
   (MS1IP@IP and MSPIP@80 cm downstream)
3. Dispersion collection using QF1 (~ 0.5 hours)
4. Minimize beam size using QD0 (~ 0.5 hours)
5. check the angle using the brems. from the MSPIP (~ 0.5 hours)
6. laser optics tuning including waist position adjustment (0.5 - 1 hours)
7. move the laser to overlap images on the IP screen (MS1IP)
8. scan in horizontal and timing

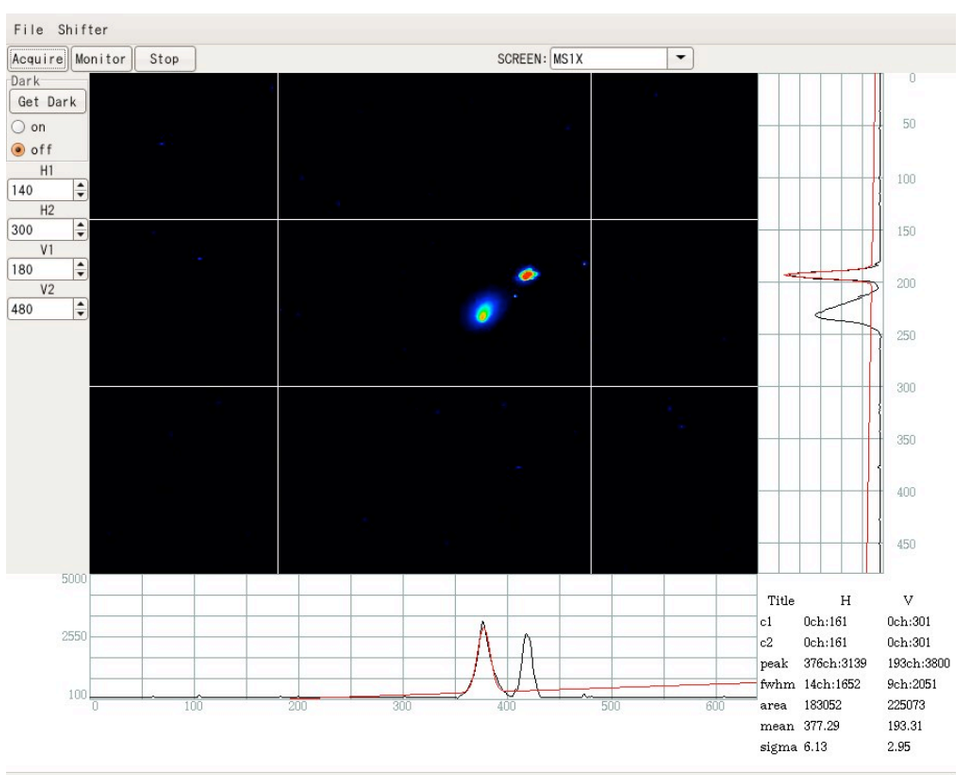

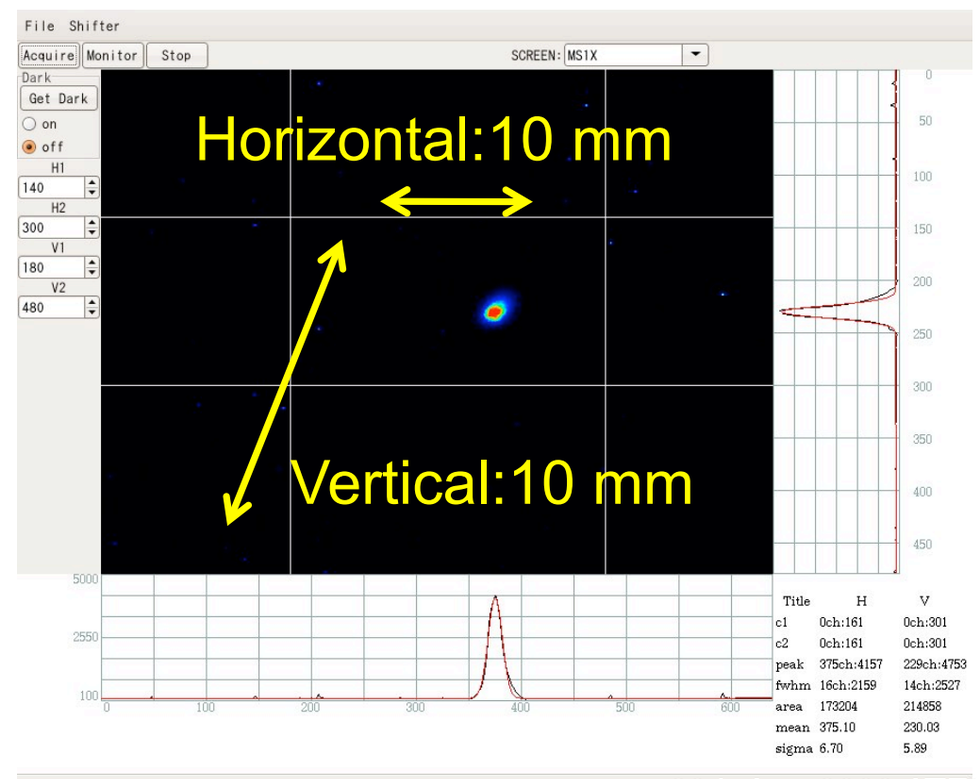

Signal from laser wire mode

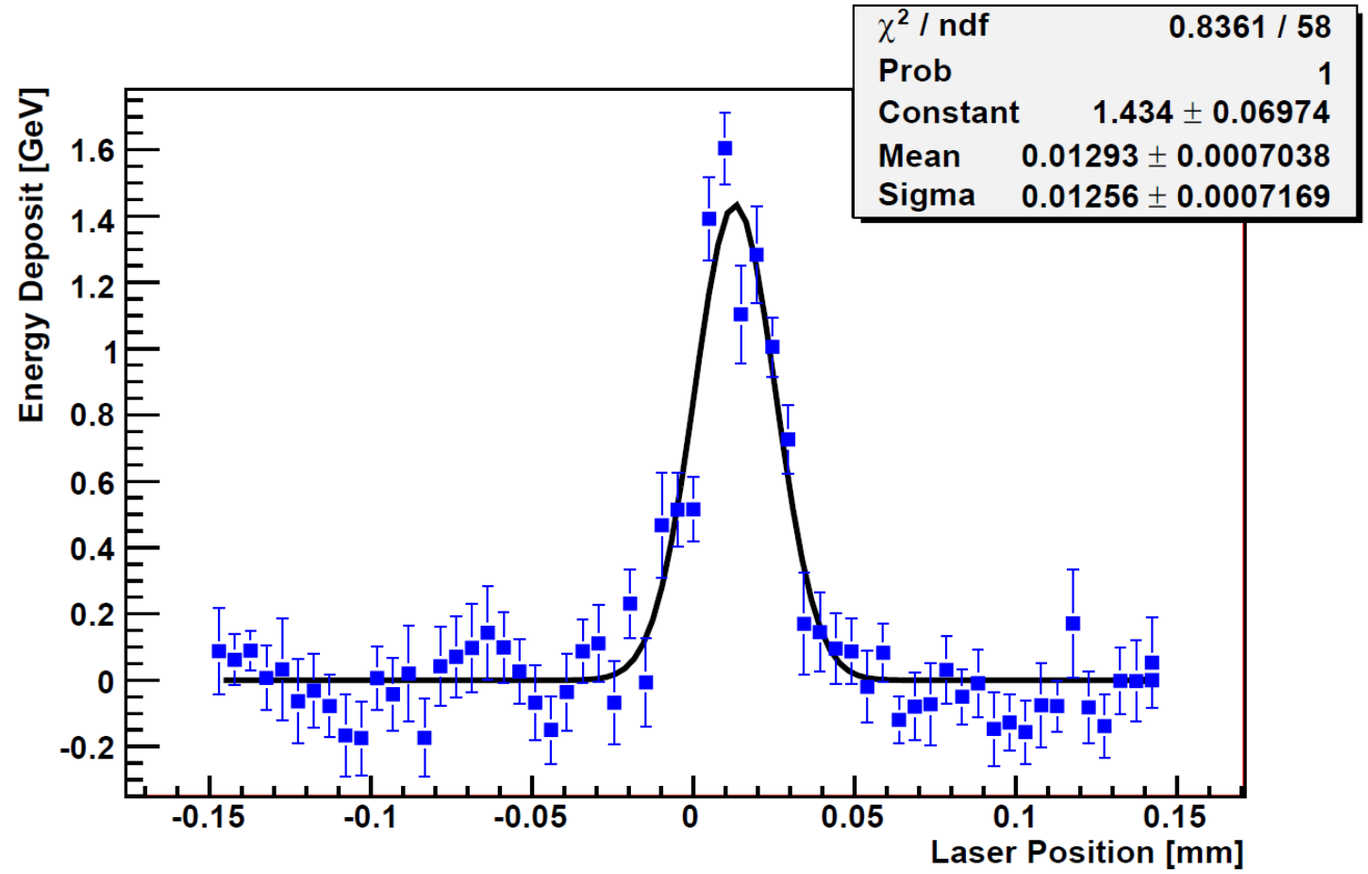

Convoluted size of 13 microns was measured

zero signal fluctuation

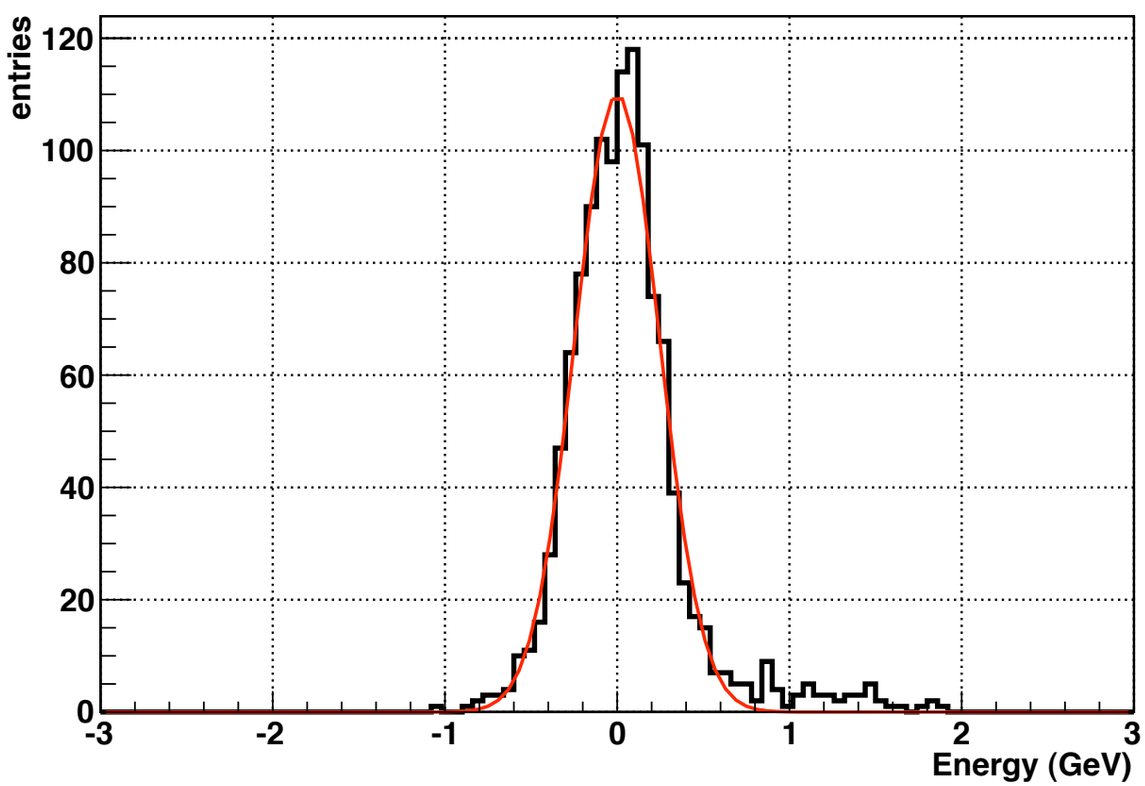

Shot by shot fluctuation is evaluated to be 0.25 GeV

Signal/Fluctuation ratio = 5.6

How to collide (8 deg. mode in April)

1. beam orbit tuning from the beginning of the EXT line (6 - 8 hours)
2. beam angle adjustment using two screens (~ 0.5 hours)
   (MS1IP@IP and MSPIP@80 cm downstream)
3. Dispersion collection using QF1 (~ 0.5 hours)
4. Minimize beam size using QD0 (~ 0.5 hours)
5. check the angle using the brems. from the MSPIP (~ 0.5 hours)
6. aline two lasers to pass through the alignment pinhole
7. scan in vertical and timing

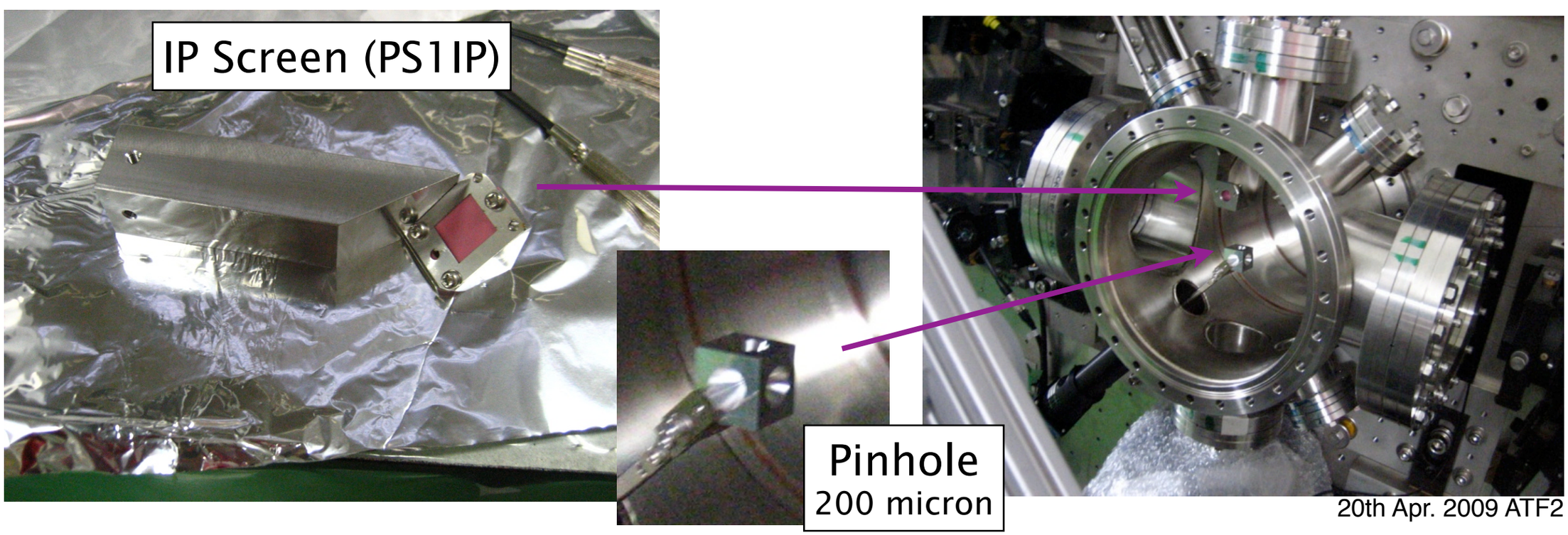

Signal from 8 deg. mode

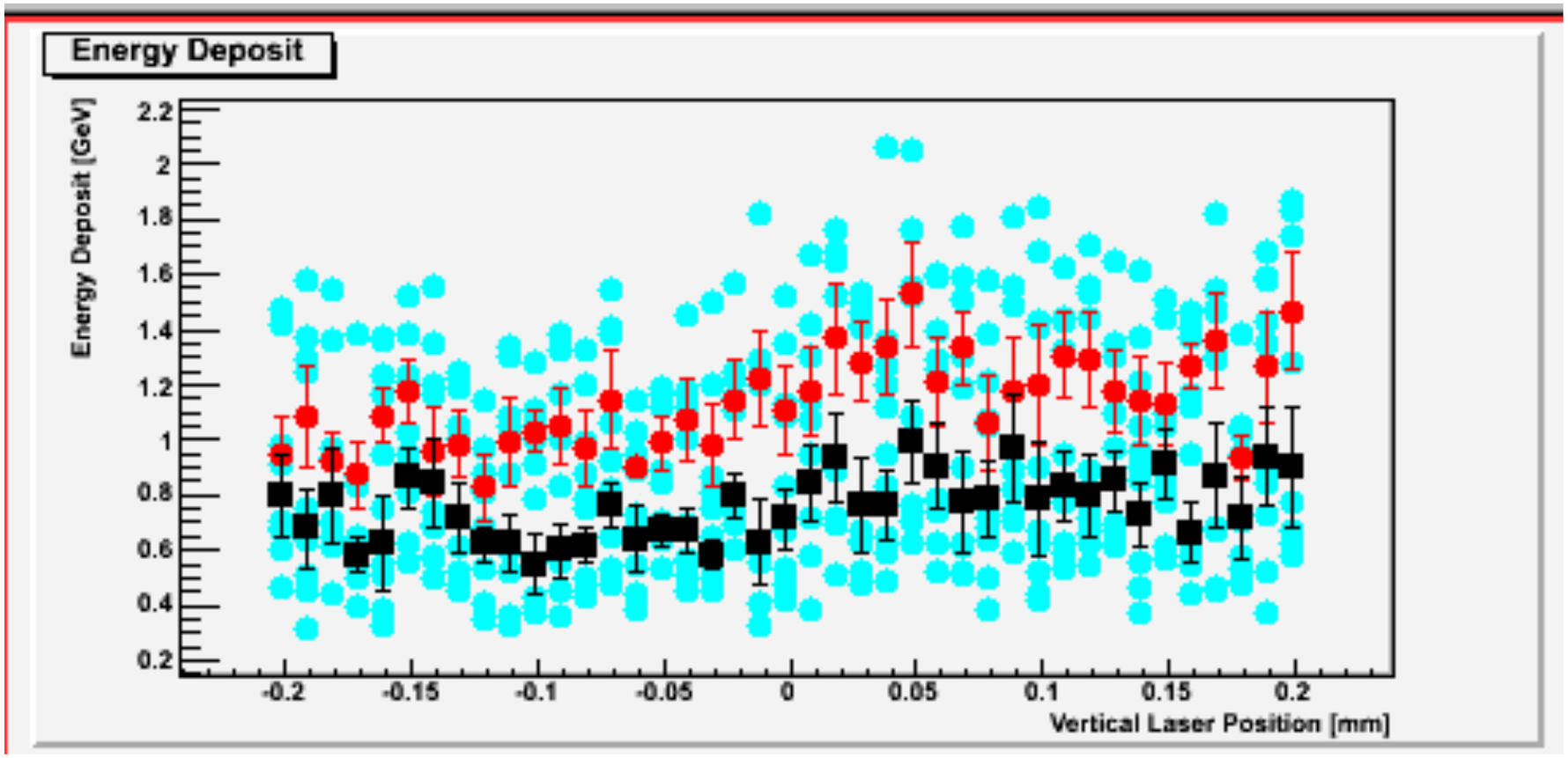

Red plots are for laser-on, Black plots are for laser-off

The another laser stay at the assumed IP position (pinhole position).

We observed clear excess signal on the background level.

Offline analysis is going on. The results will be presented at PAC09

Commissioning plan

Before the coming summer shutdown:

8 deg. mode operation

During the shutdown:

preparation of 30 and 174 deg. modes

After the shutdown:

start with the 8 deg. and 30 deg.

Summary

All the main components of the Shintake monitor system had been installed without any serious problem.

Expected resolution was evaluated to be 3 nm at 37 nm beam.

Gamma-ray signal was observed with the laser wire mode in Feb.-Mar. and convoluted beam size was measured in horizontal.

We also succeeded to observe signal with the 8 deg. mode in April. Commissioning of the 8 deg. mode is going on.

shower distribution