ILD Machine Detector Interface

Karsten Buesser

TILC‘09

Tsukuba

18.04.2009

ILD Detector Model

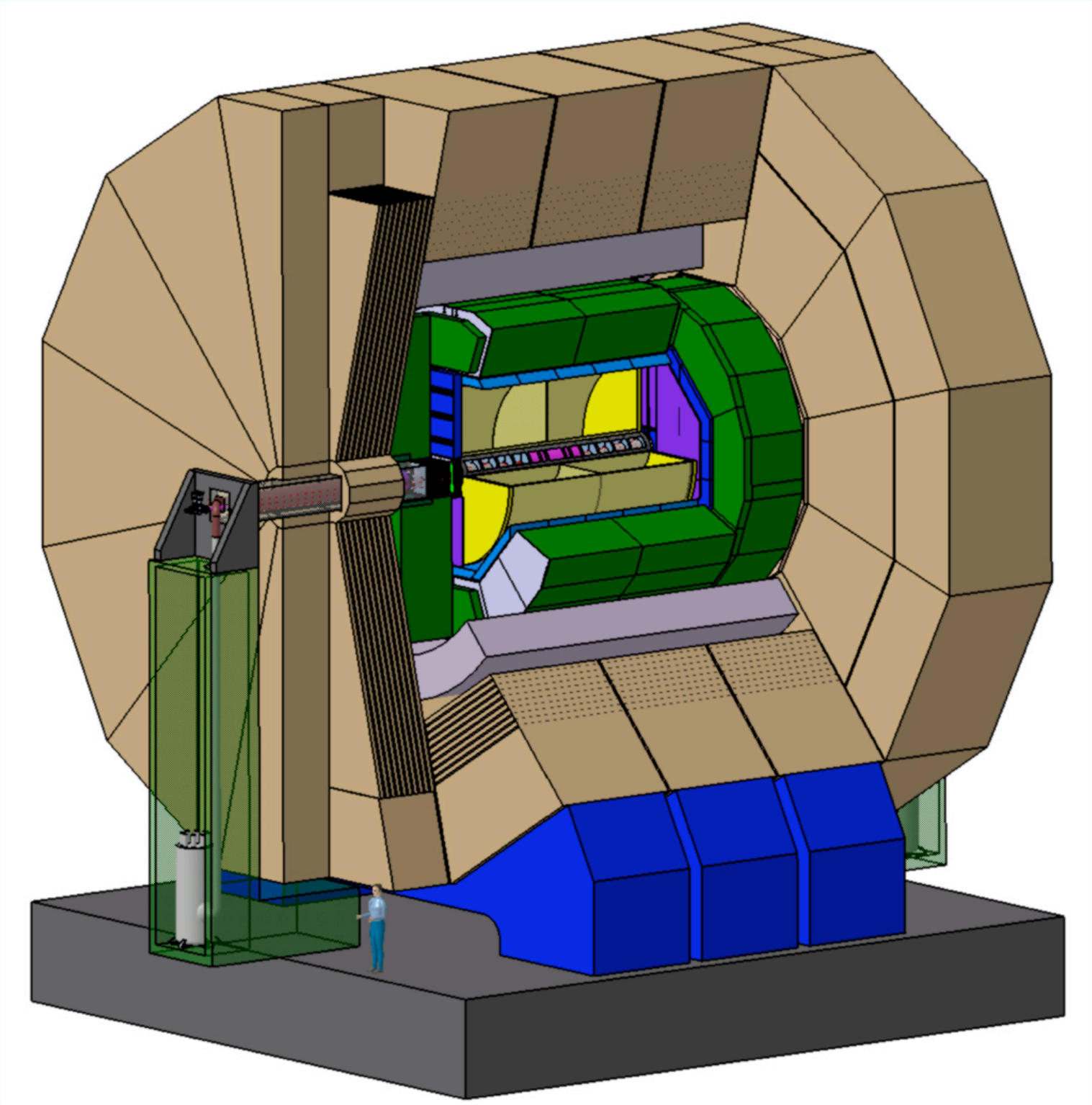

Mechanical Concept

- platform for push-pull
- 3 barrel yoke rings, 2 endcaps
- central yoke ring carries cryostat with coil and barrel calorimeters
- endcap yoke carries endcap calorimeters
- TPC and SET suspended from cryostat
- Inner silicon detectors in support structure (CFRP) supported from TPC
- QD0 magnet and forward calorimeters carried by pillar, suspended from coil cryostat with tie-rods

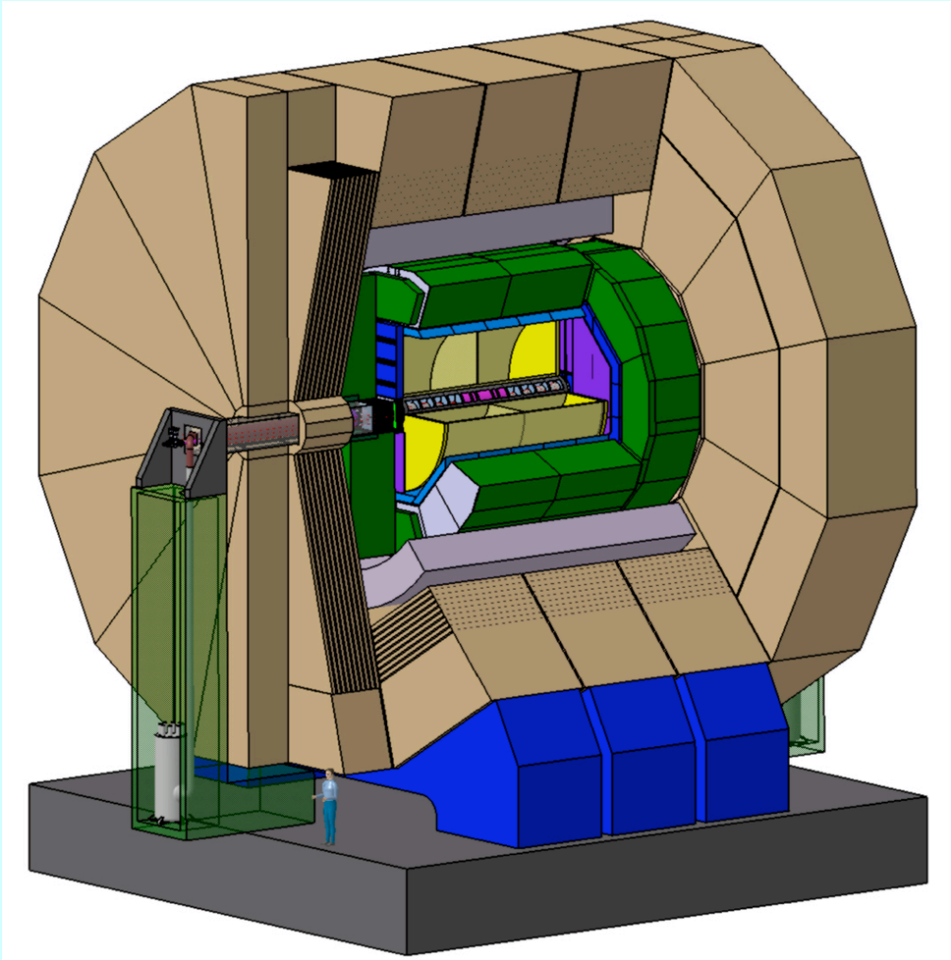

Inner Detector Support

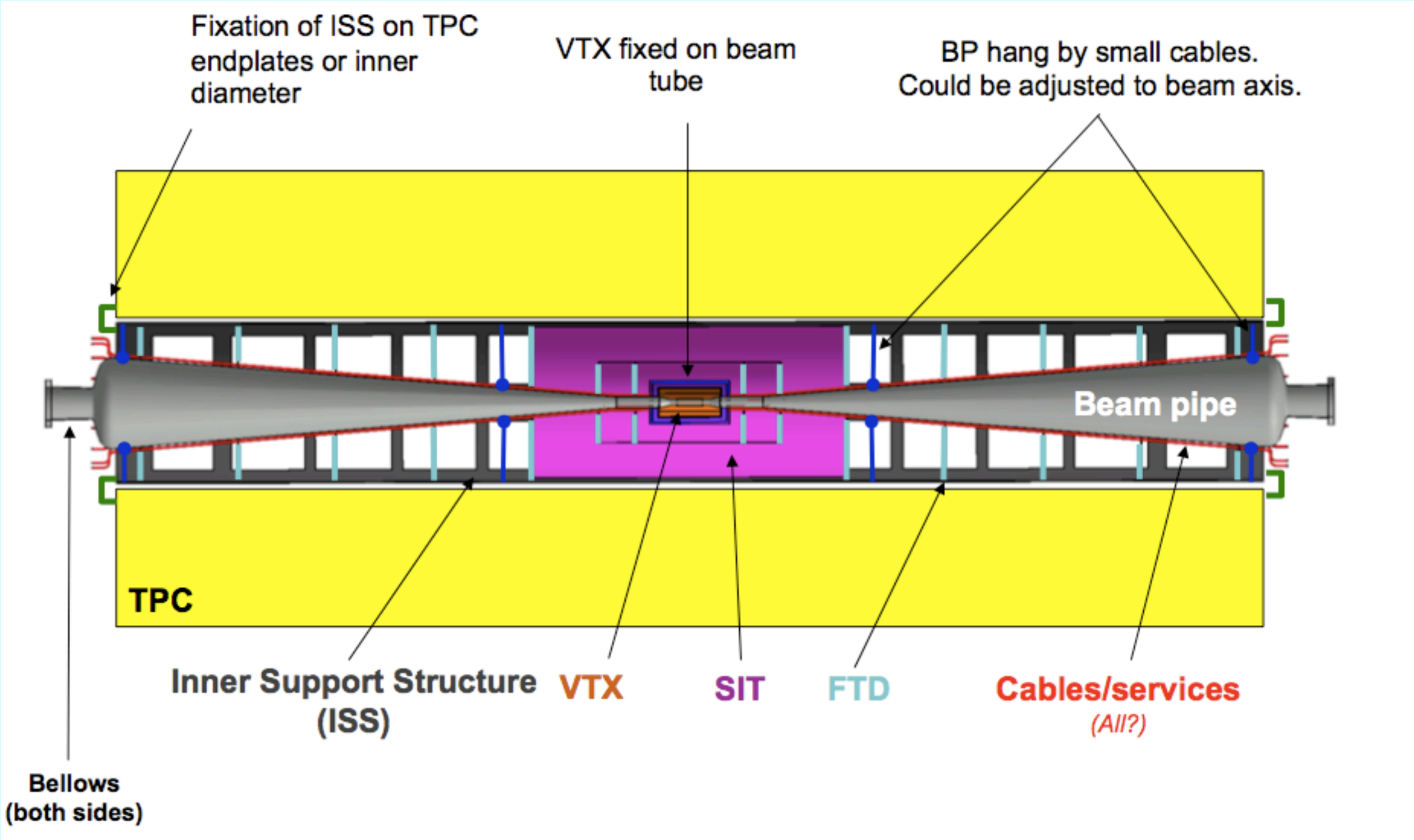

QD0 Support

- Suspended from pillar and tie-rods

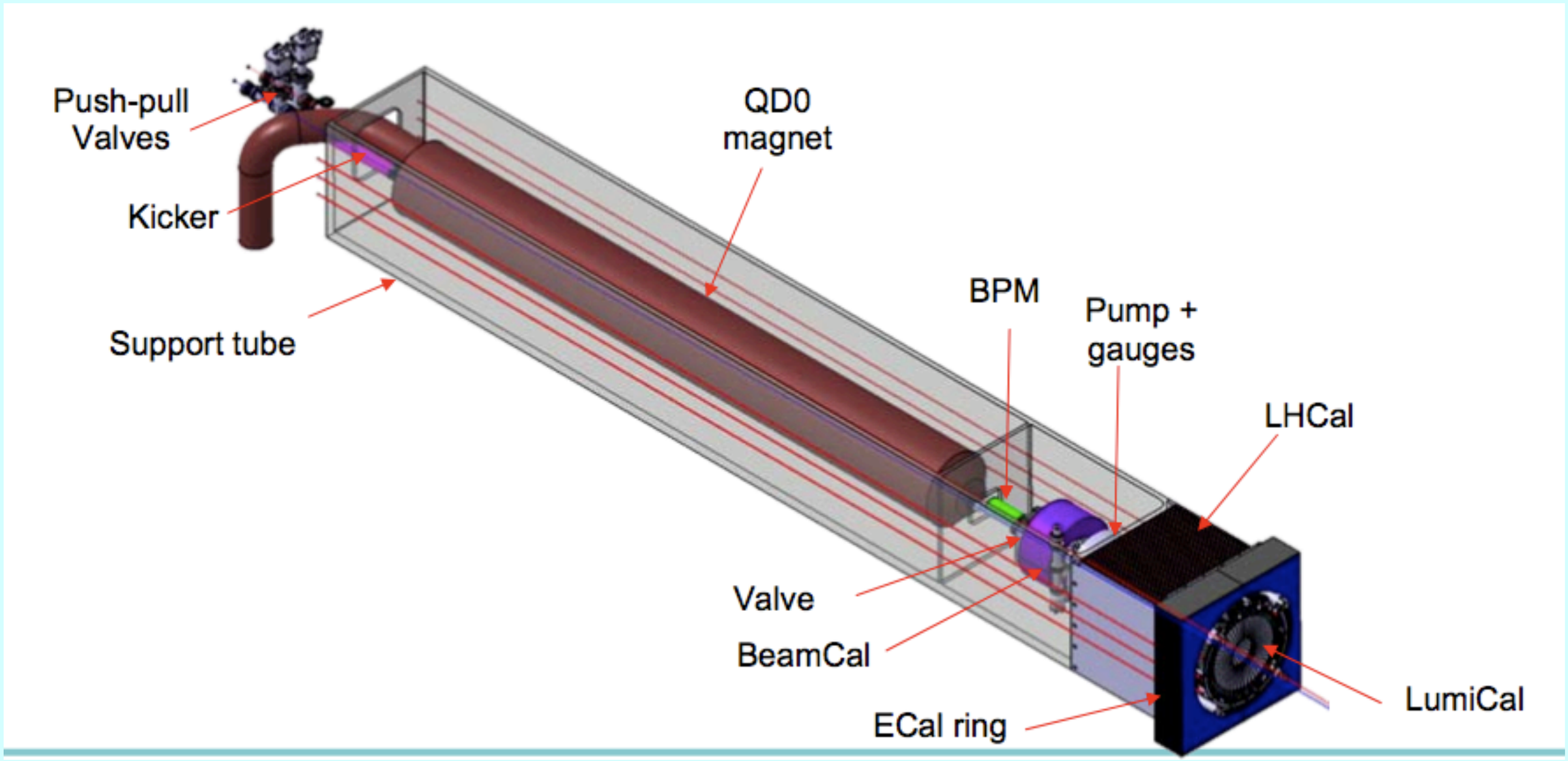

Forward Calorimeters

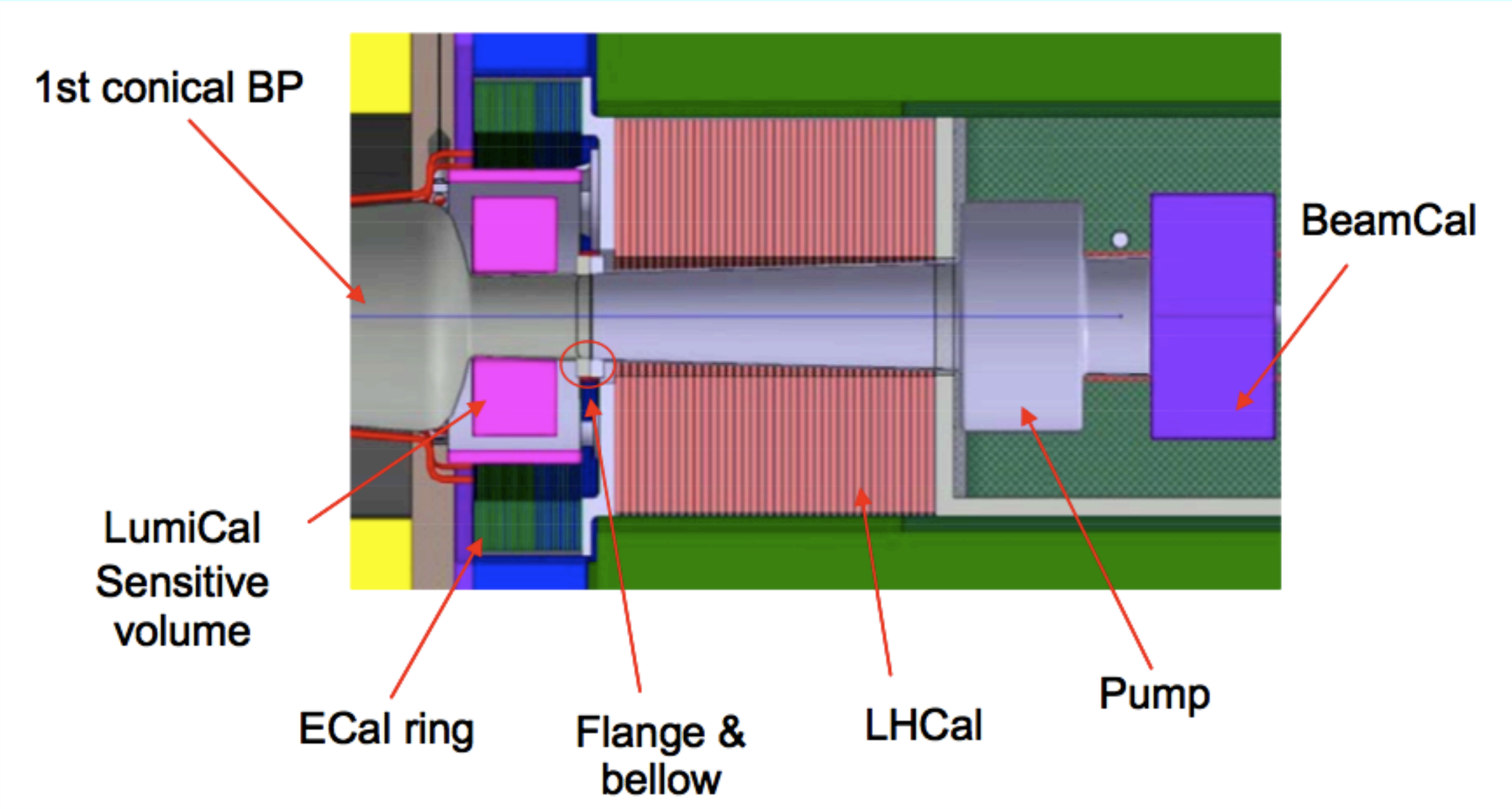

TPC and Barrel Calorimeters

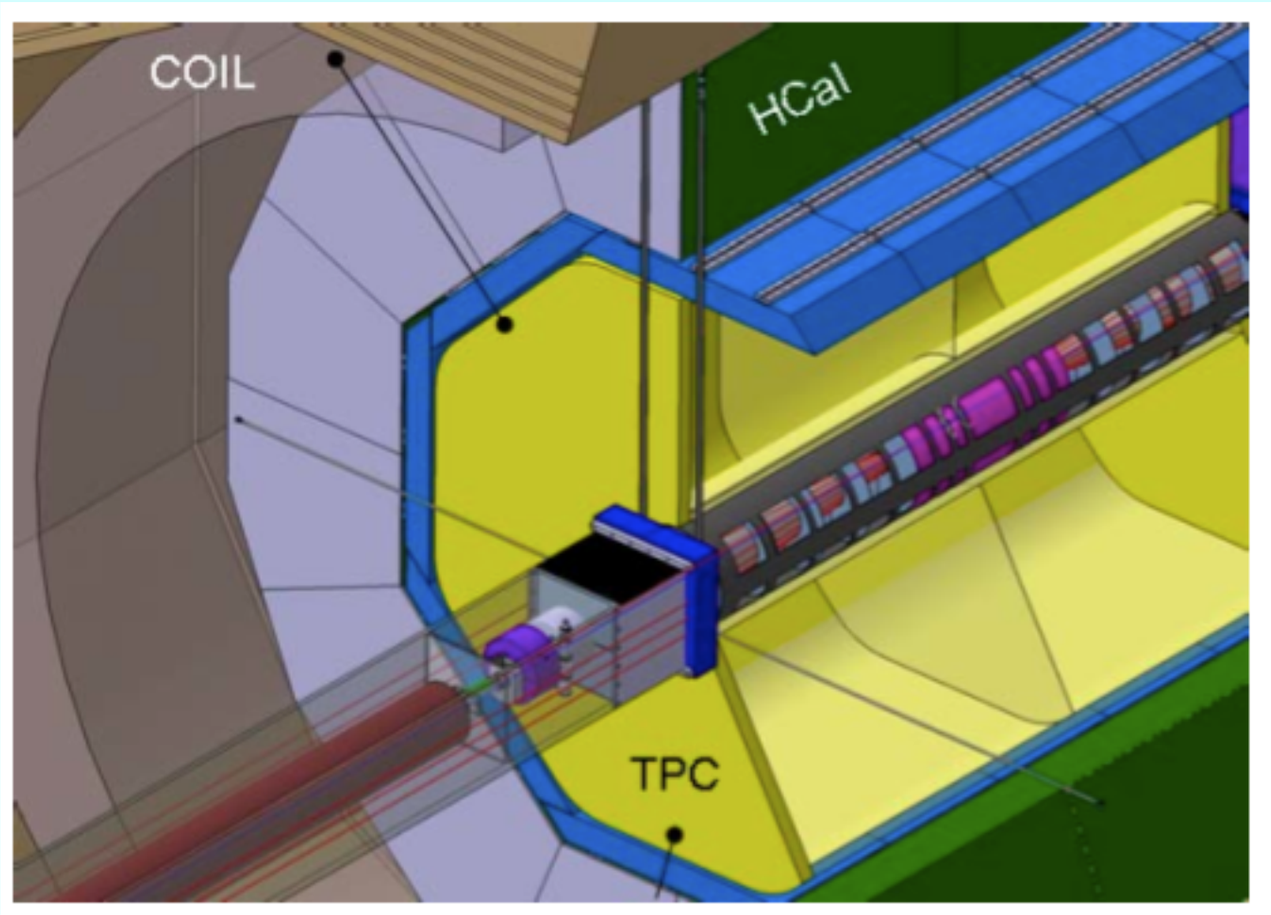

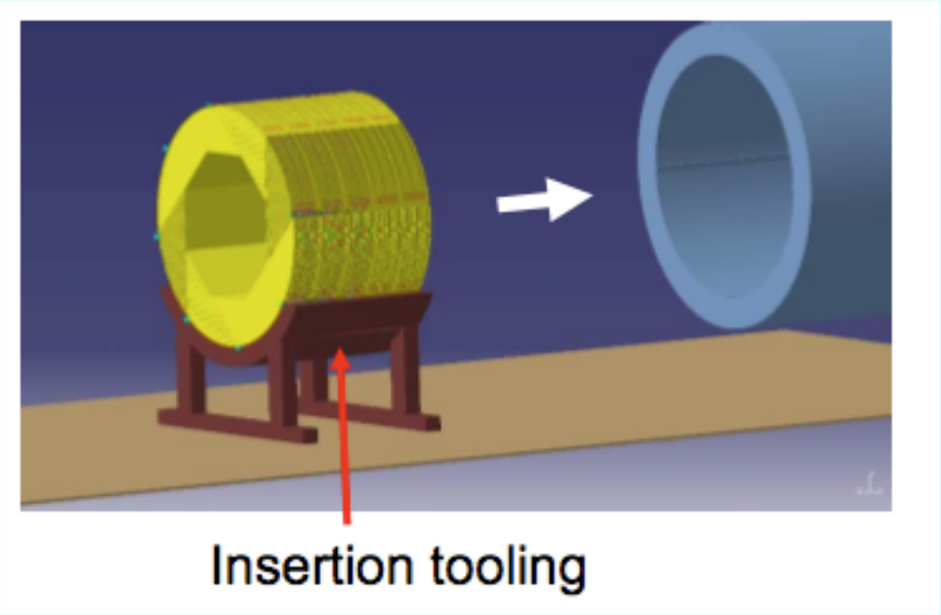

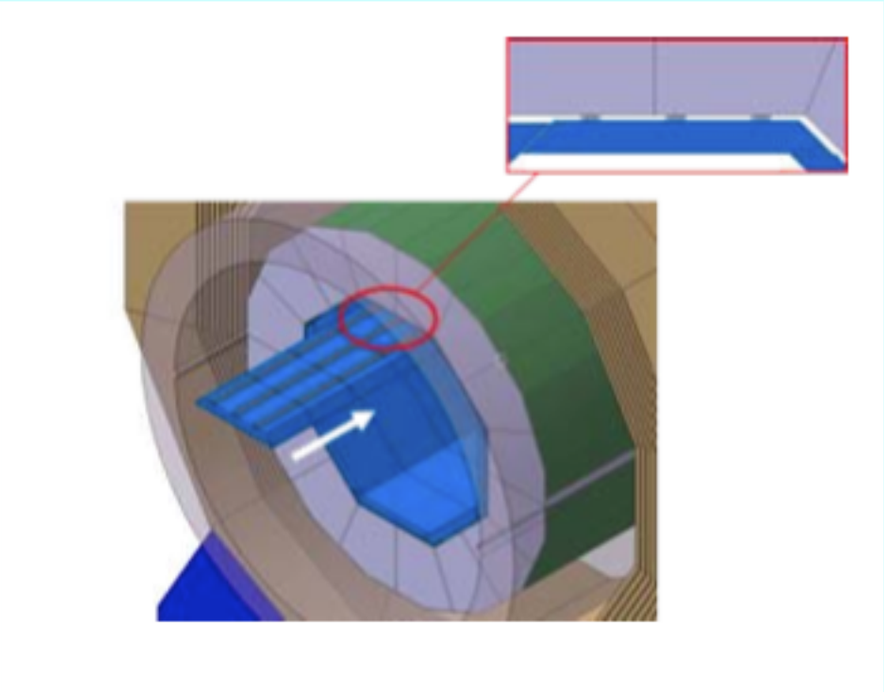

- We have found a conceptual design of the detector
- R&D is needed for an engineering solution

ILD Coil

- Follows CMS design
- Needs five layers due to stored energy (correction coils)

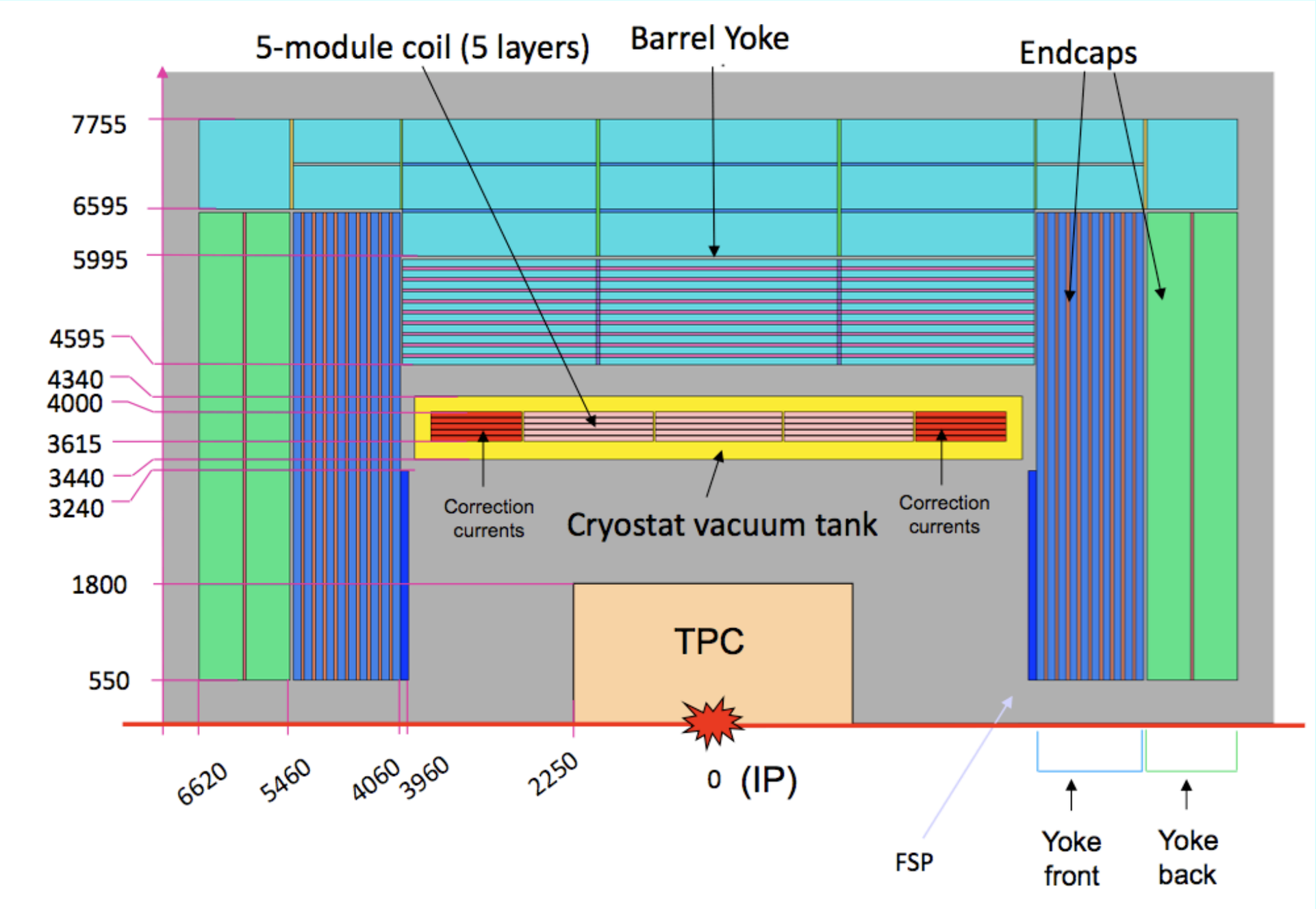

Yoke

- Push-pull requirement for the stray fields (50G at 15m) defines iron thickness: ~2.7m in the barrel
- Magnetic forces on endcap are huge (~18 kt weight equiv.)
  - Deformations of endcap are under control with proper design (~3mm)

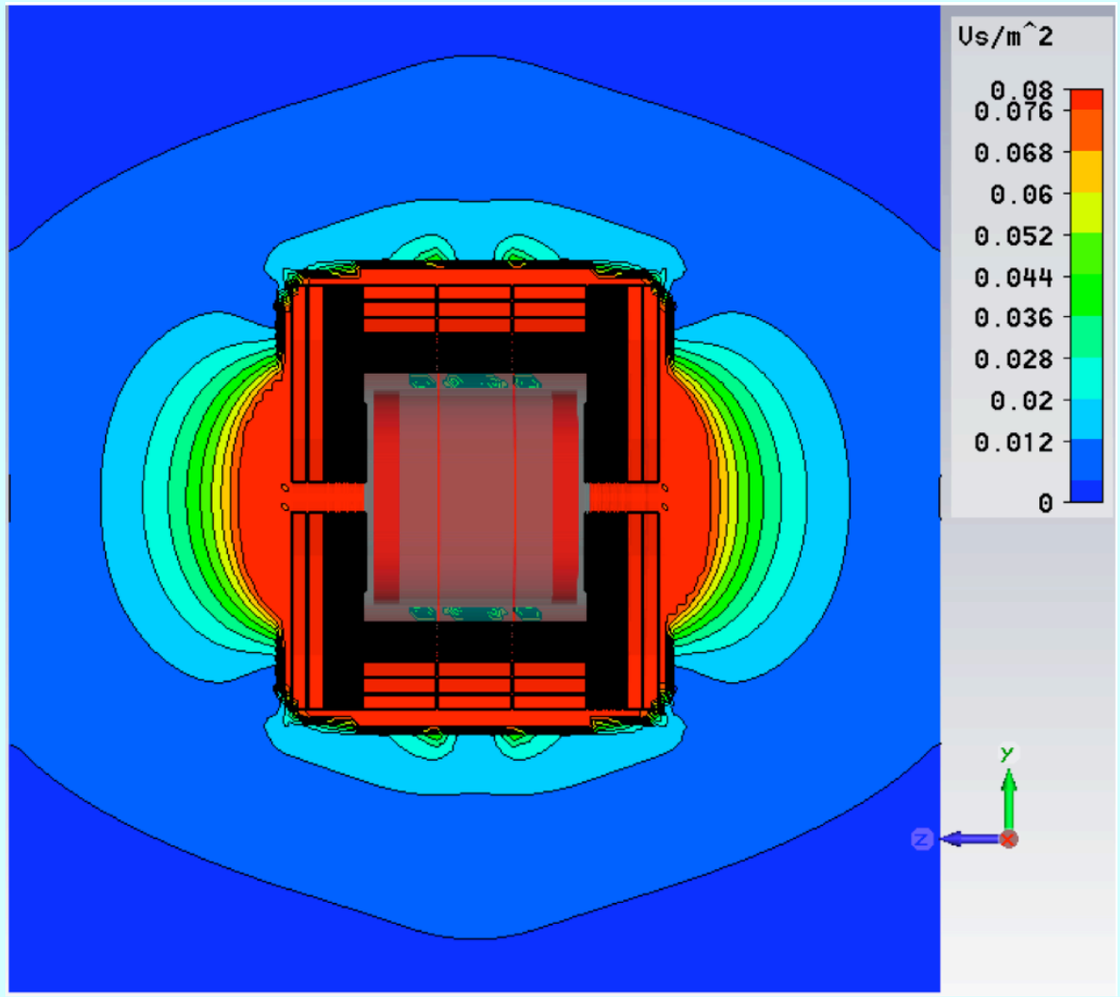

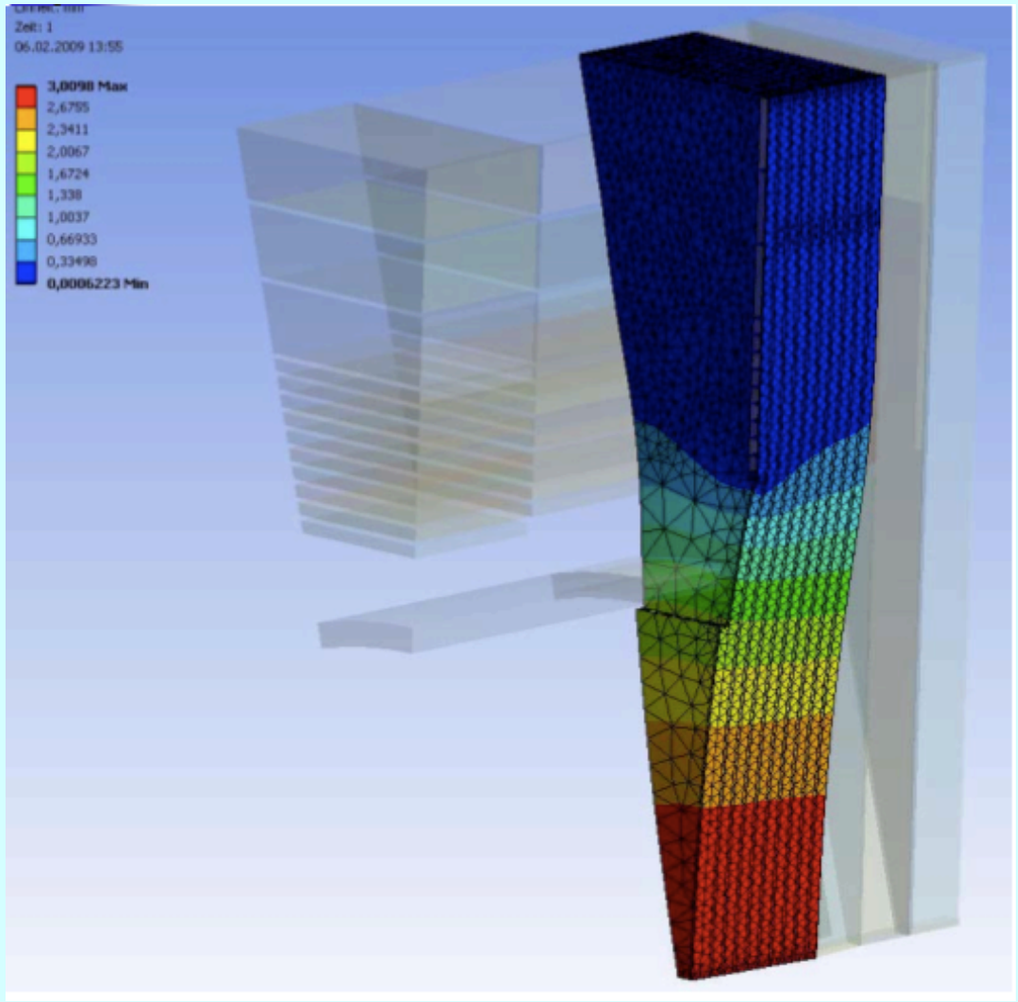

Cabling Scheme

- Barrel detector cables will be routed between cryostat and barrel yoke to gap between barrel yoke rings.
- Space needed between barrel and cryostat:
- Gaps between barrel rings: 50mm
- Gaps between barrel yoke and endcap not large enough (25mm)
  - possible solution: route cables through four channels: 100 mm x 825 mm
- Cables of inner silicon detectors routed along beam pipe:

	d(mm)	
Component services	34	
Barrel yoke vertical deformation	6	taken fr
Assembly tolerances	5	
Deformation of outer cryostat	10	CMS
Clearance for moving barrel ring	50	CMS
Space for inner muon chambers	50	
Sum	155	

U. Schneekloth

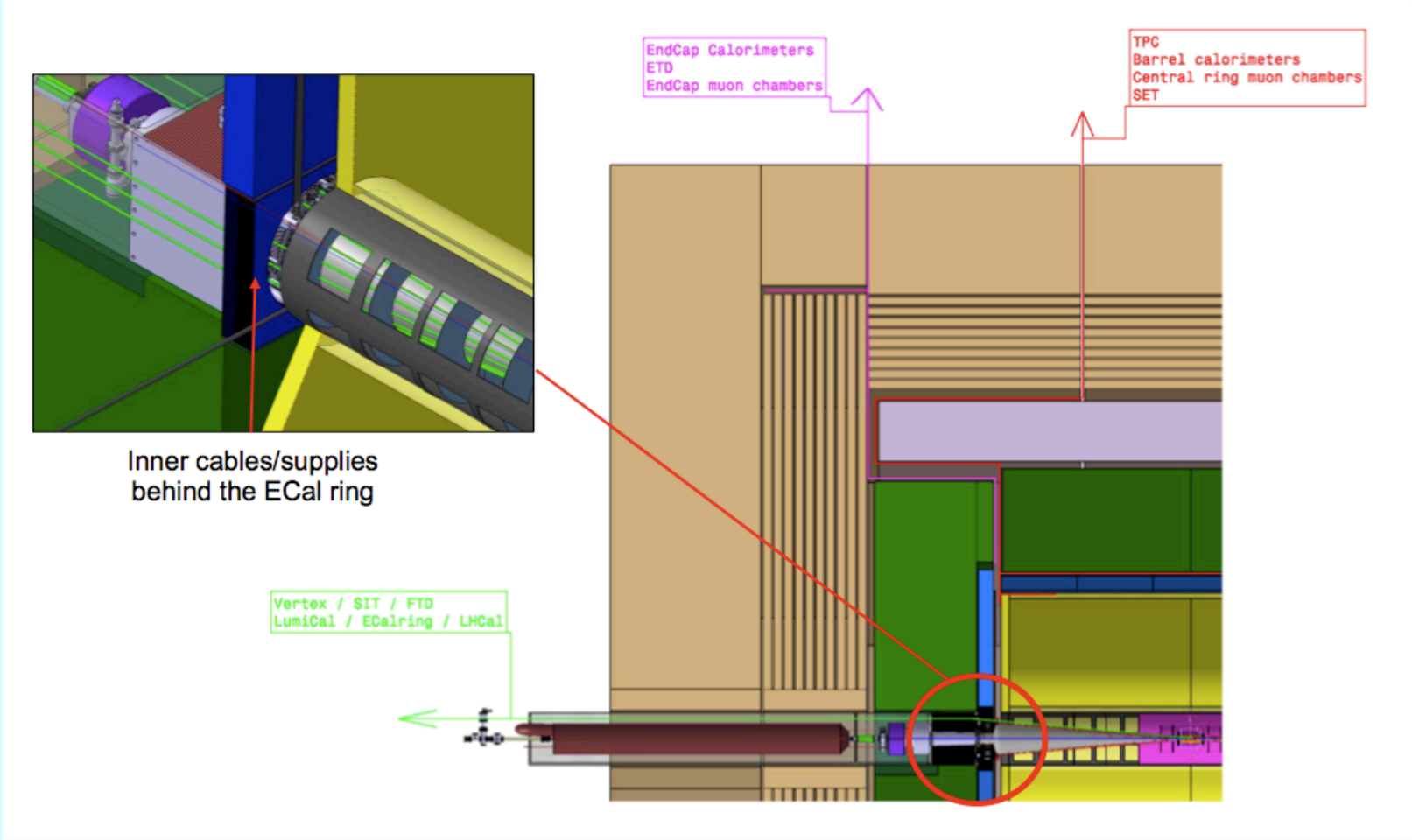

Detector Assembly and Opening

Surface assembly of the detector à la CMS

Underground procedures:

- Install QD0 support pillar
- QD0 with support structure
- end cap yoke w. endcap calorimeters
- first barrel yoke ring
- central yoke w. coil and barrel carlorimeters
- TPC
- inner part: silicon detectors, beam pipe
- third barrel ring
- second yoke endcap
- second pillar, QD0

Needs 30m hall space (RDR hall has 25m)

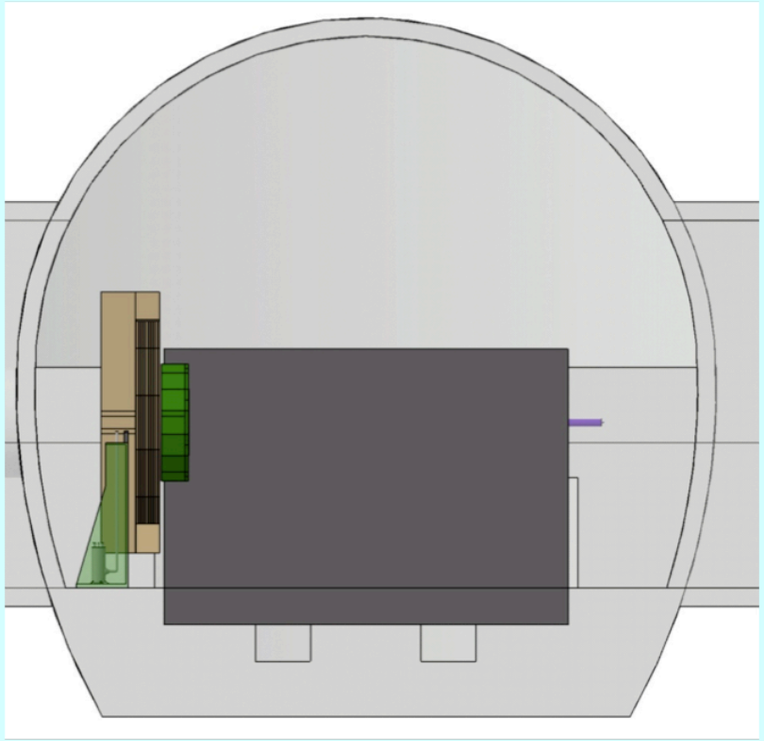

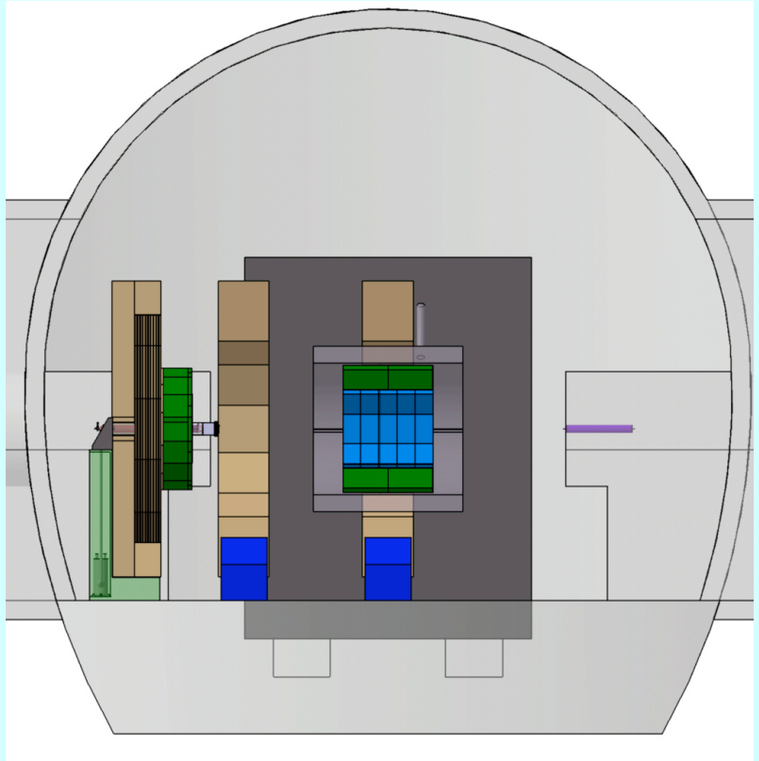

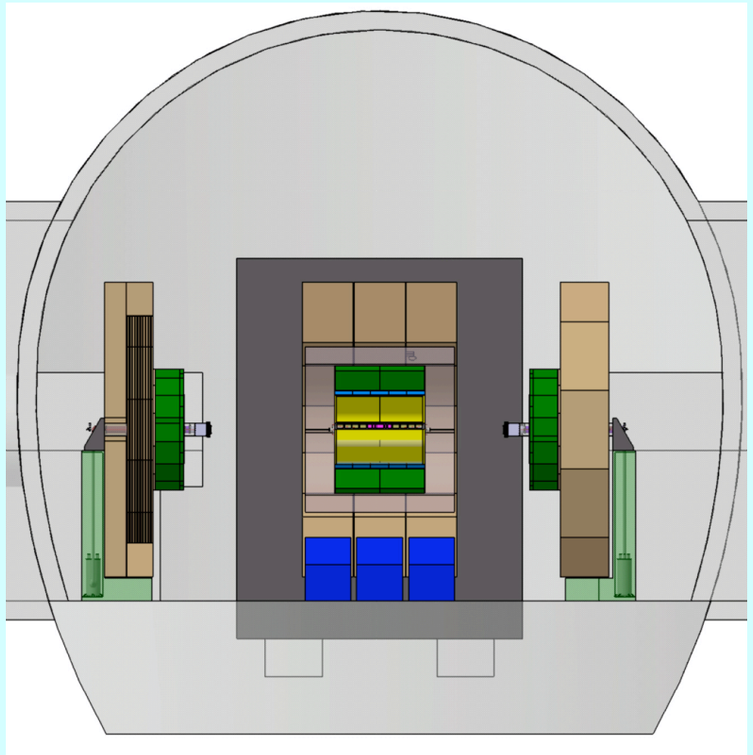

Opening on the Beam

- Endcap yoke partially split allows ~1m access
- Allows for short maintenance in the beam position
- Every major work will be done in the parking position

- Removing the pillar would allow a non-split endcap
  - mechanically nicer
  - needs other QD0 support

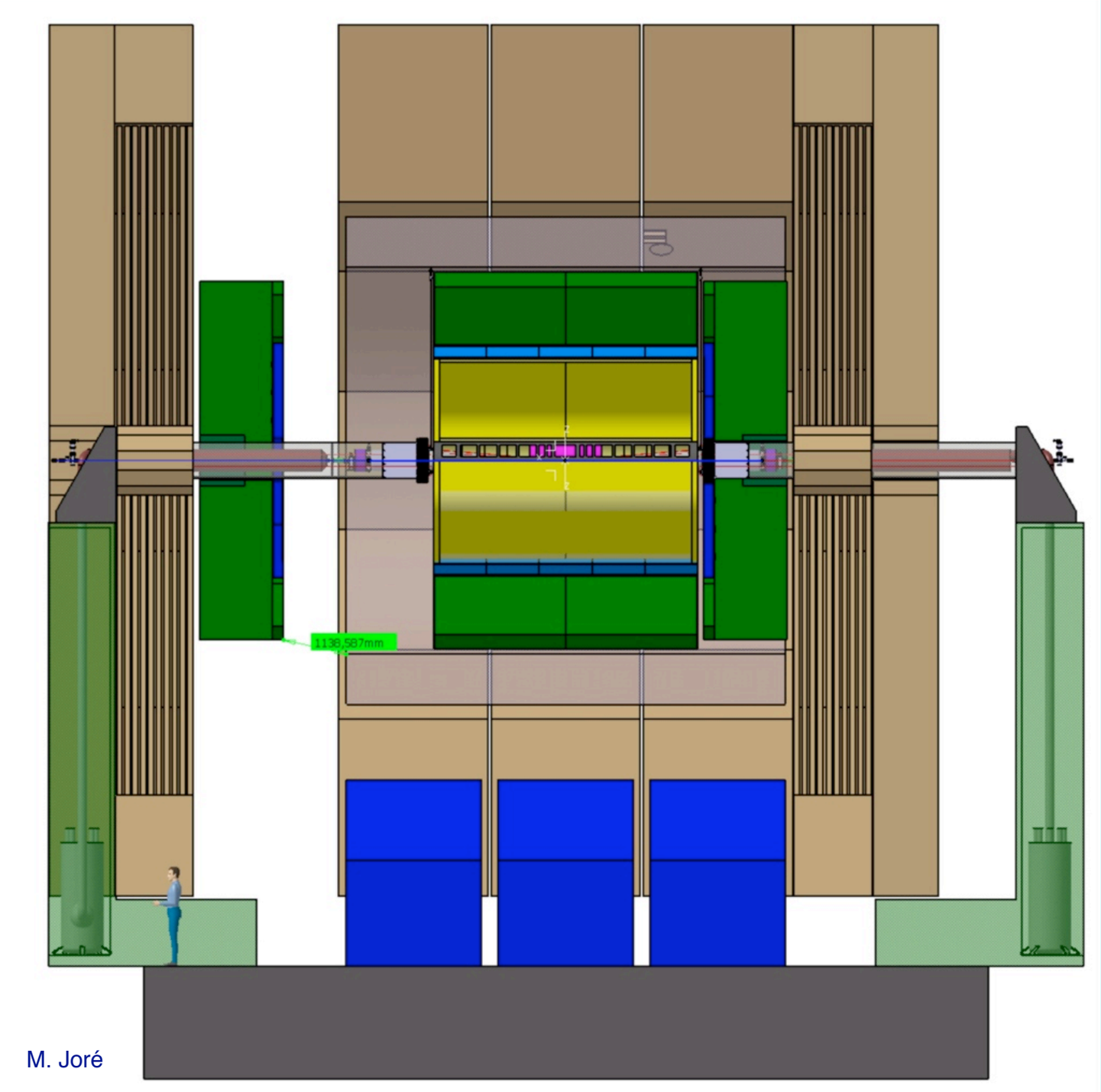

Detector Services

Primary services located on surface, e.g.:

- Water chillers
- Power transformers
- UPS facility
- Helium storage and compressor plant

Secondary services close to the detector (underground but not on-board):

- voltage supplies
- AC/DC converters and cryogenics for coil
- vacuum services
- computing and data links

On-board services, e.g.:

- QD0 cryogenics
- cold box and valve box for coil

RDR Underground Cavern

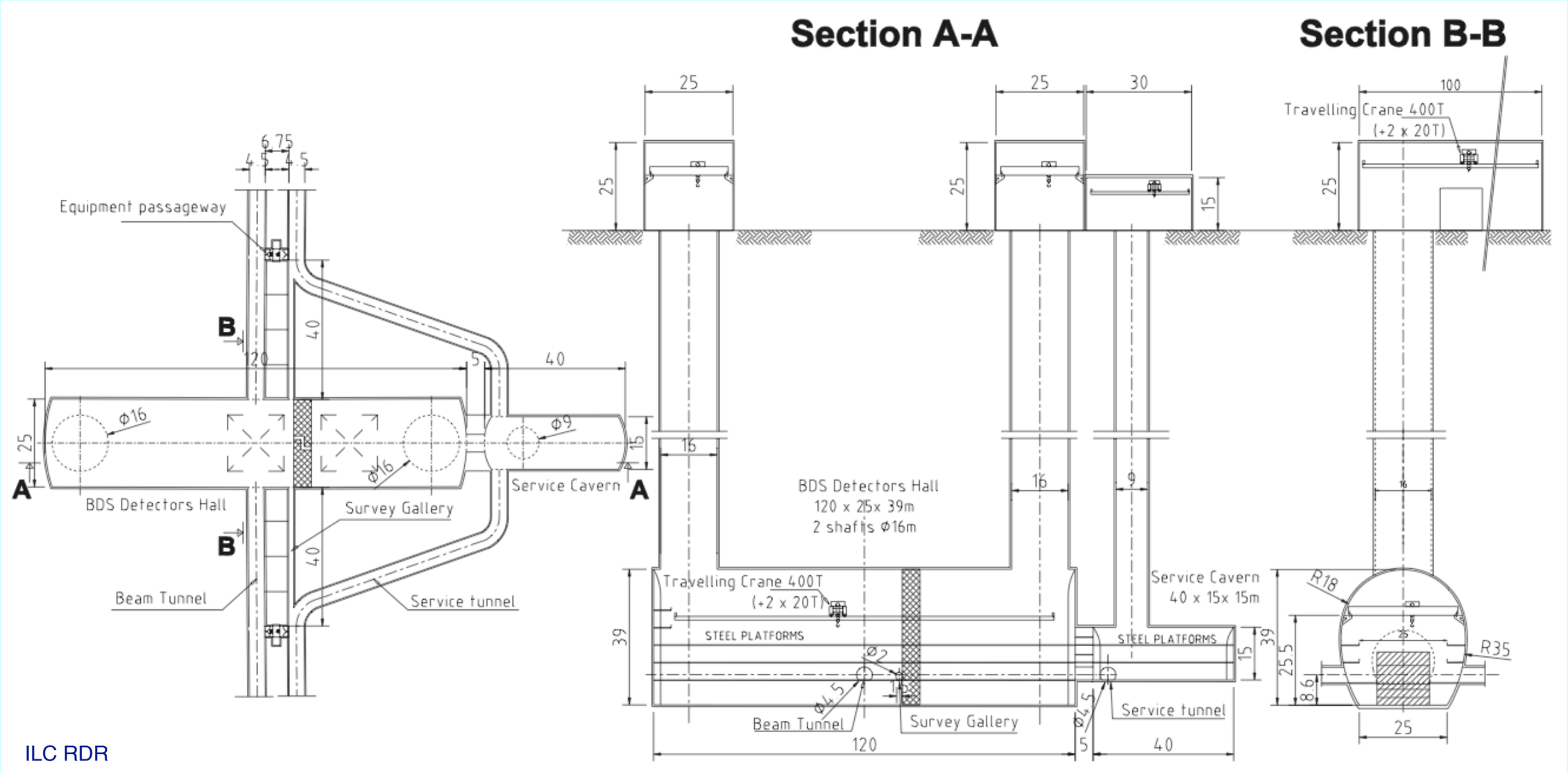

- just 25m wide
- shafts above hall
- large volume (due to 400t crane)
- just one service cavern

Underground Cavern Design Study

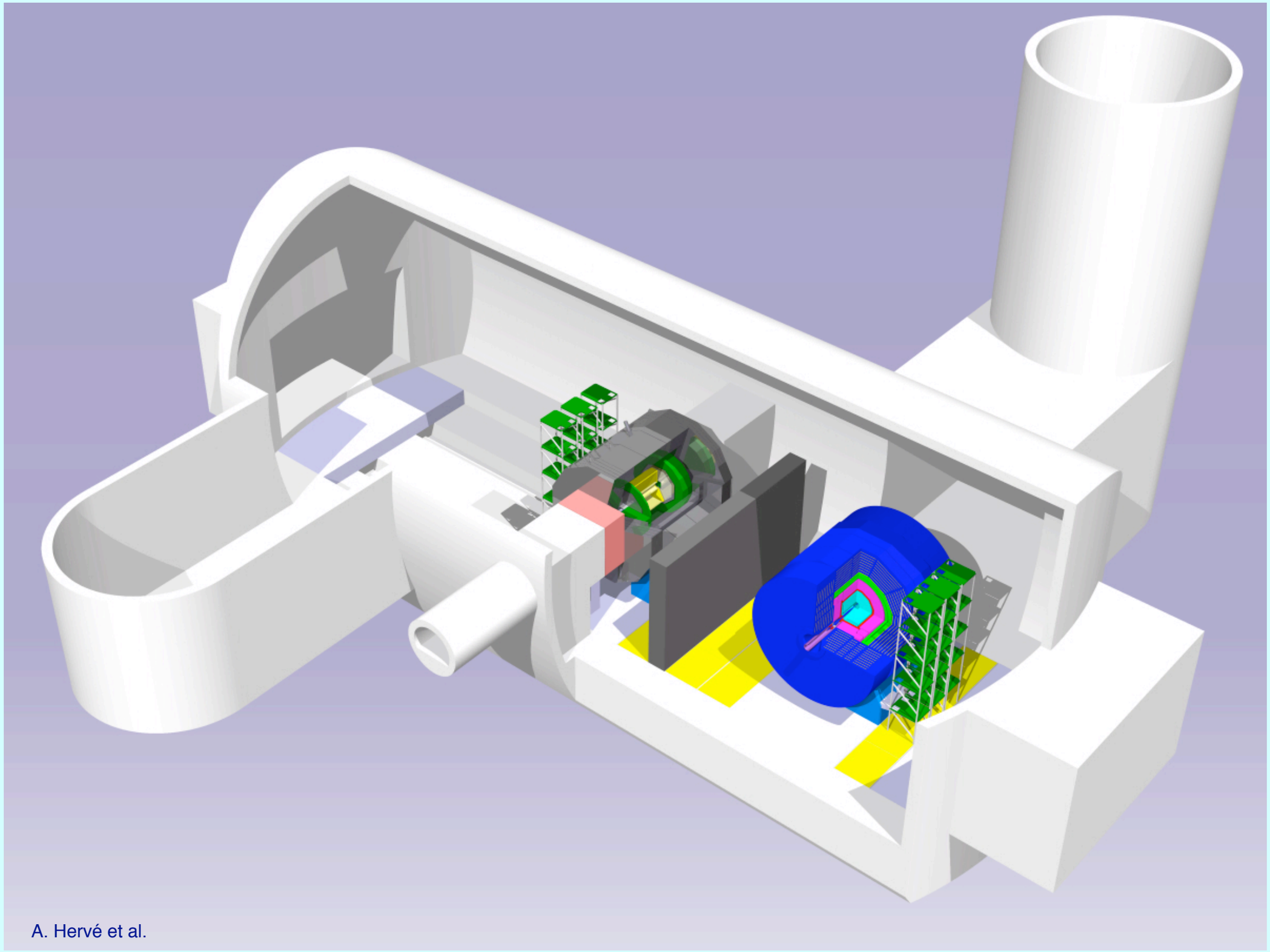

Push-pull Operations

- Detector services are provided using cable chains
- Few on-board services needed (QD0 supply)
- Flexible helium lines needed
  - either cold
  - or warm
  - R&D needed in any case!
- Bus bar connection for coil

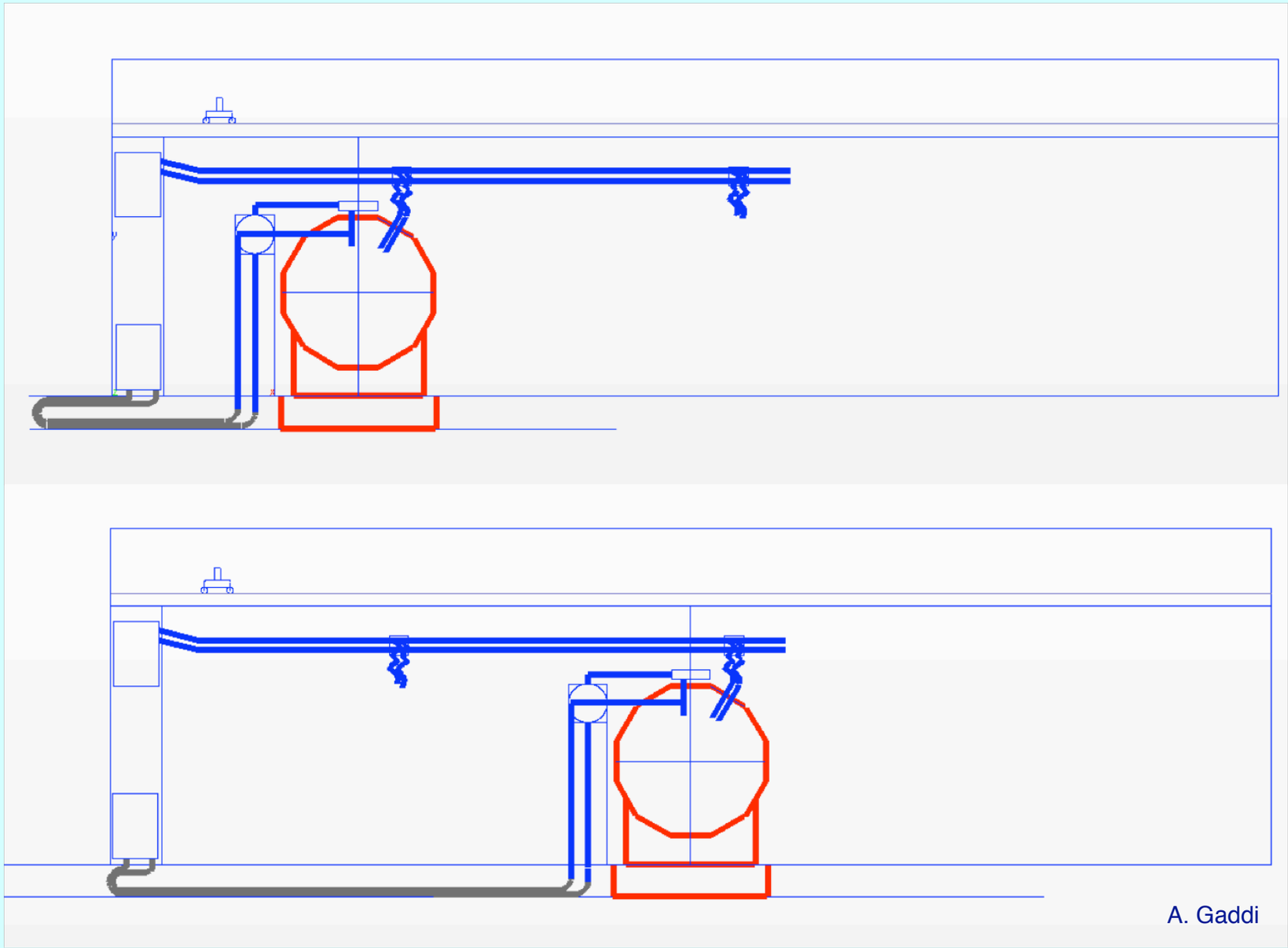

Cryogenics

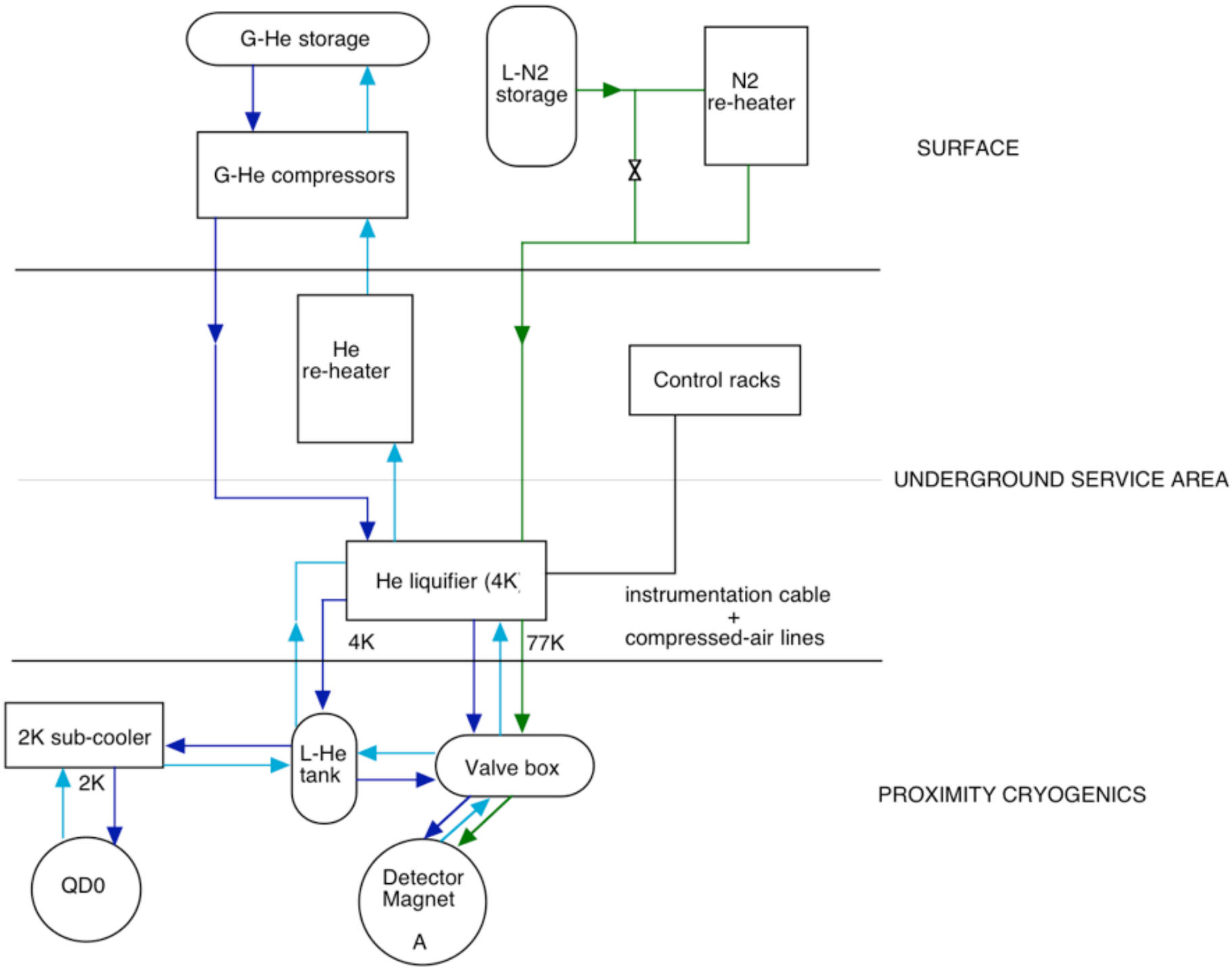
G-He storage
L-N2 storage
N2 re-heater
SURFACE
G-He compressors
He re-heater
Control racks
UNDERGROUND SERVICE AREA
He liquifier (4K
instrumentation cable
+
compressed-air lines
4K
77K
2K sub-cooler
L-He tank
Valve box
2K
PROXIMITY CRYOGENICS
QD0
Detector Magnet
A

Push-pull Operation

Moving out:

- power down the coil (~4h)
- remove radiation shield (pacman)
- disconnect local supplies (bus bar)
- disconnect beam pipe between QD0 and QF1
- move detector towards garage position on platform
- connect local supplies in garage position

Moving in:

- reverse procedure as above
- alignment and calibration using e.g. MONALISA

Total time: 2 days (one for movement, one for alignment)

Note: this relies on the assumption that the coil and its ancillaries can be kept cold during the movement

- This needs careful R&D

Dedicated talk on ILD push-pull issues by T. Tauchi!

Alignment

- MONALISA interferometric laser system could be used to align both QD0 magnets with respect to each other and to the beam axis
- Could also be used to align the detector itself
- Conceptual studies have started
- Again, full engineering study is needed to study access of laser beams in vacuum to the magnets (not on LoI timescale!)

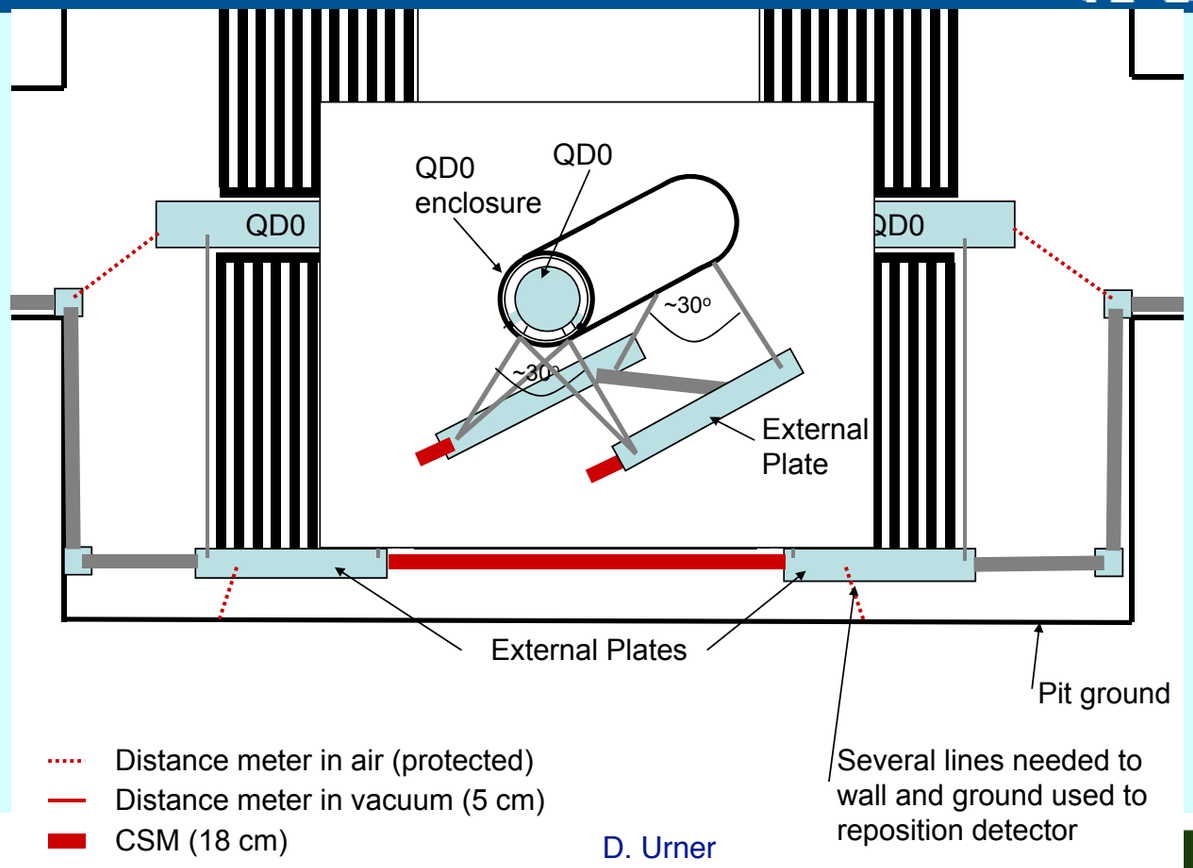

D. Urner

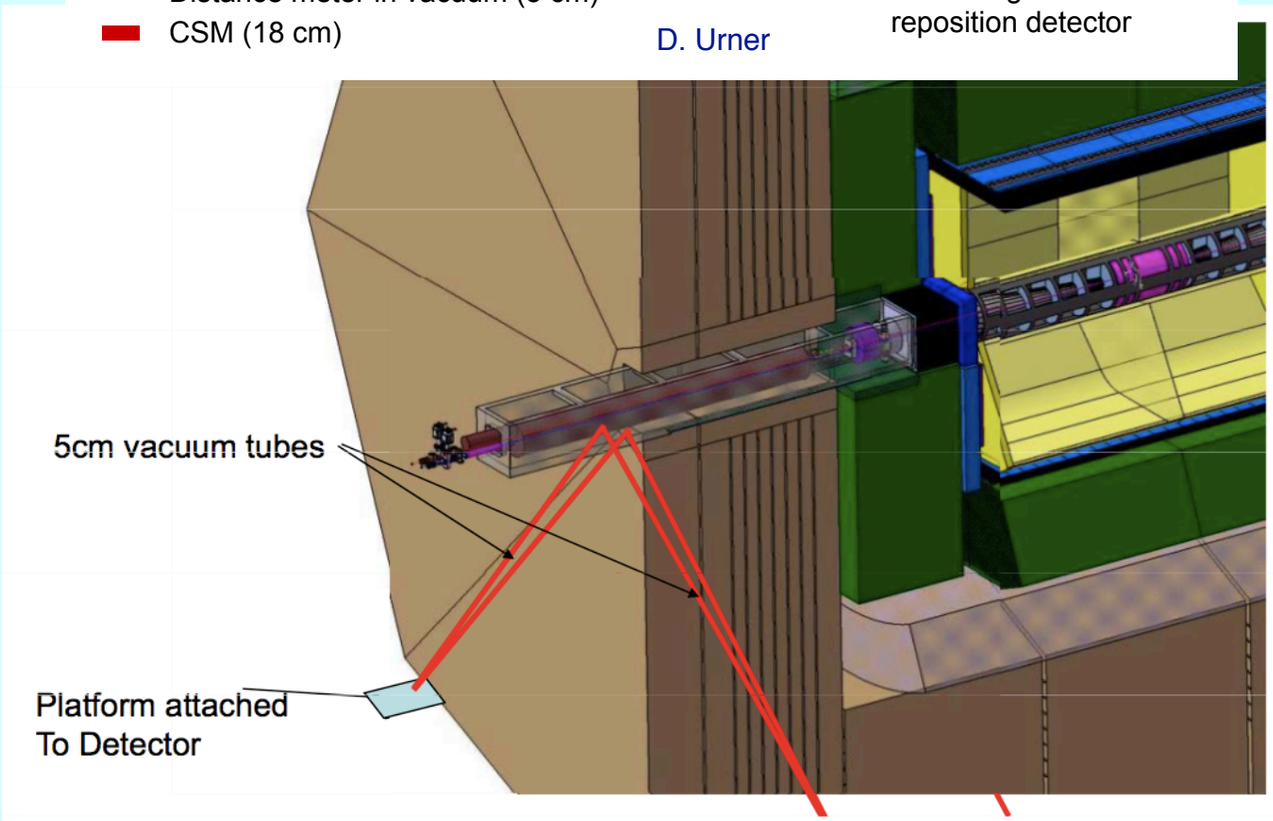

Alignment Requirements

Detector axis:

- ±1mm and 100µrad w.r.t. line defined by QF1
- detector height adjustment range: ± several cm, depending on geological requirements

QD0 alignment:

- Alignment system:
  - Degrees of freedom: 5 (x,y,pitch,yaw,roll)
  - Range per d.o.f.: ±2mm, ±30mrad (roll), ±1 mrad (pitch, yaw)
  - Step size per d.o.f.: 0.05 µm
- Accuracy before low-intensity beams are allowed to pass:
  - ±50µm (x,y), ±20mrad(roll), ±20µrad (pitch, yaw)
- Accuracy and stability after beam-based alignment:
  - ±200nm and 0.1 µrad w.r.t. line defined by QF1 stable over 200ms between bunch trains
  - QD0 vibration stability: less than 50 nm within 1ms bunch train

- Control of the mover system will remain under control of BDS system and might be adjusted during the run

Shielding

- ILD will be self-shielding (tech. note by T. Sanami et al.)
- ‚Pacman‘ shielding could be simple concrete portal
- Detailed studies needed

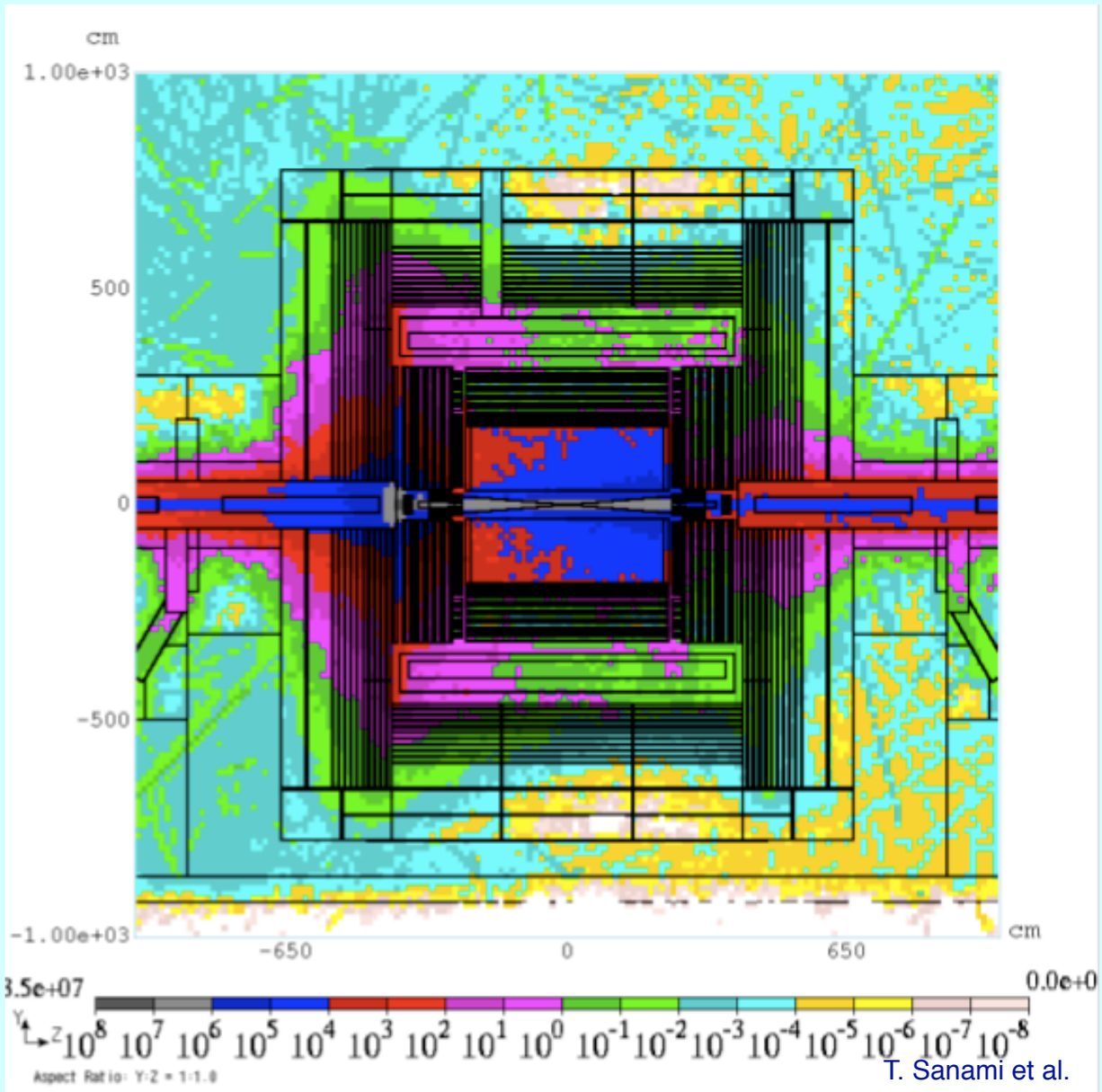

T. Sanami et al.

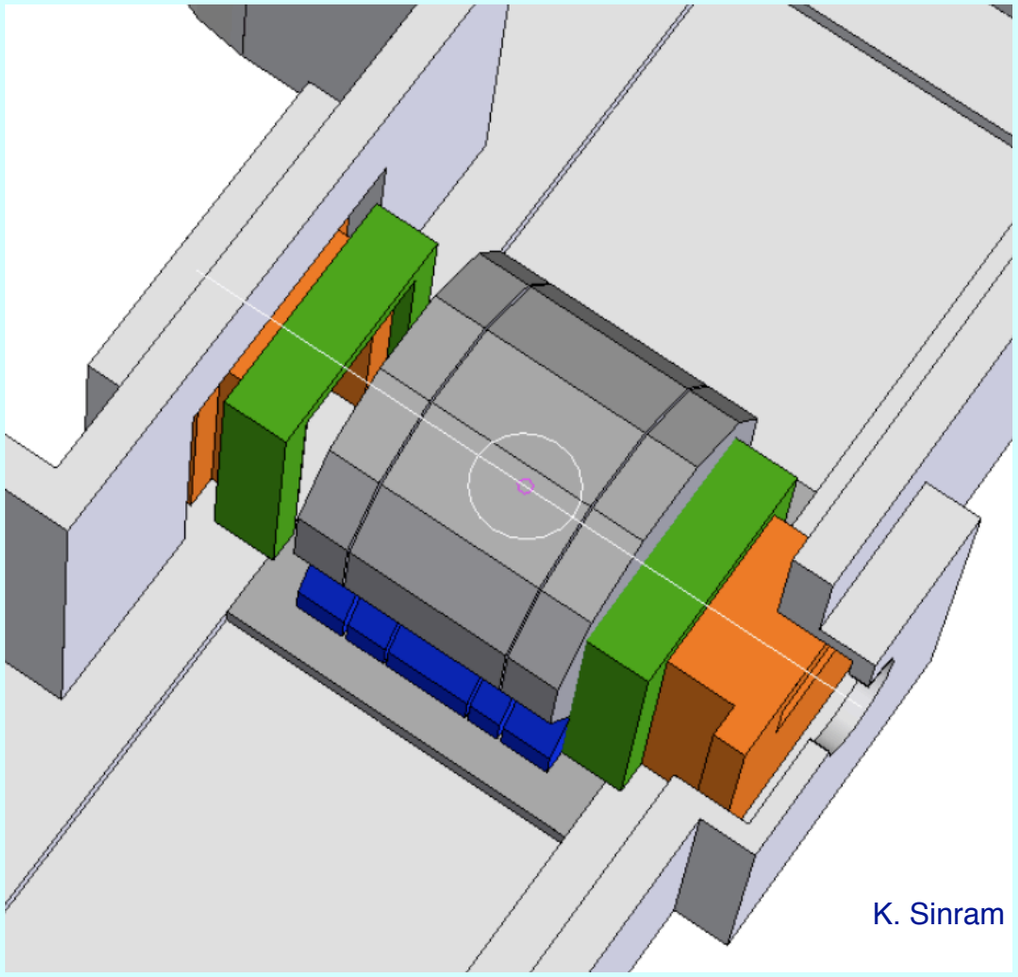
K. Sinram

Interaction Region

- QD0 integration
- Beam pipe
- Background suppression

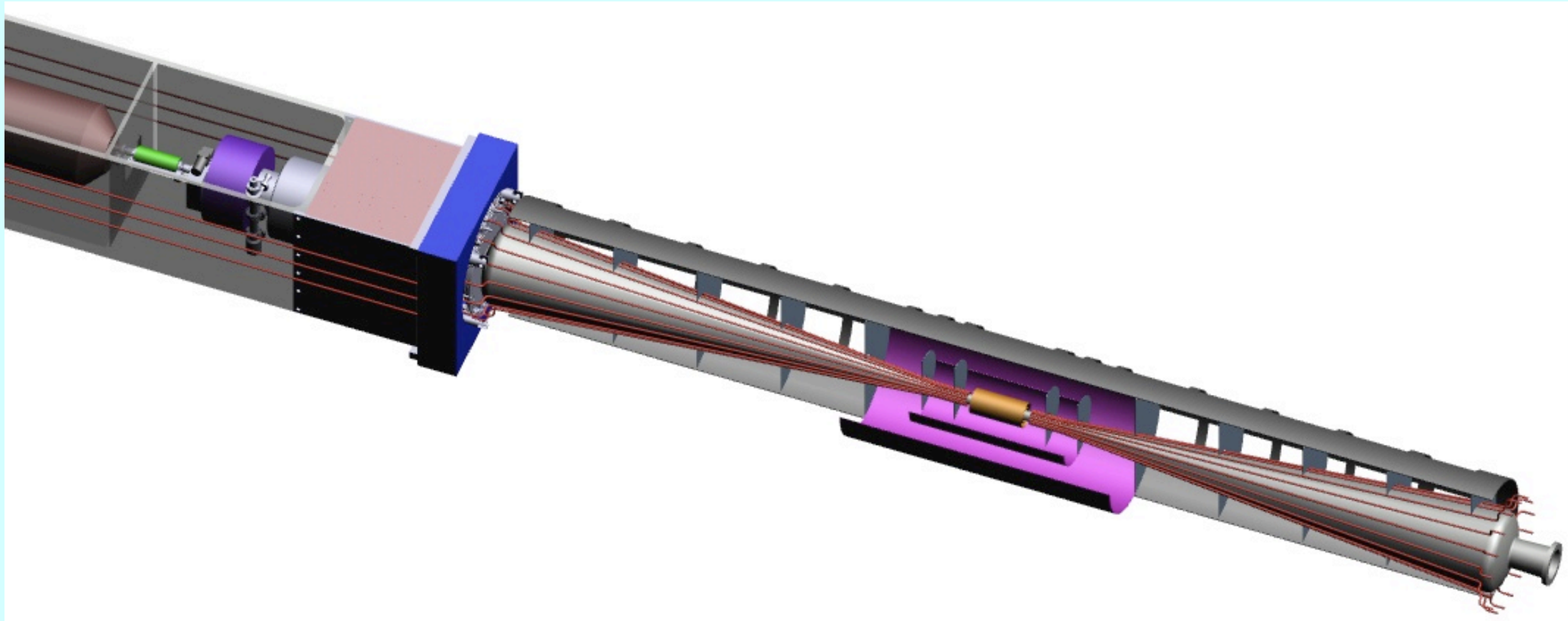

QD0 Support

- QD0 supported by pillar outside of the detector and suspended on tie rods from the cryostat
- Monitored by MONALISA, placed on actuators for alignment

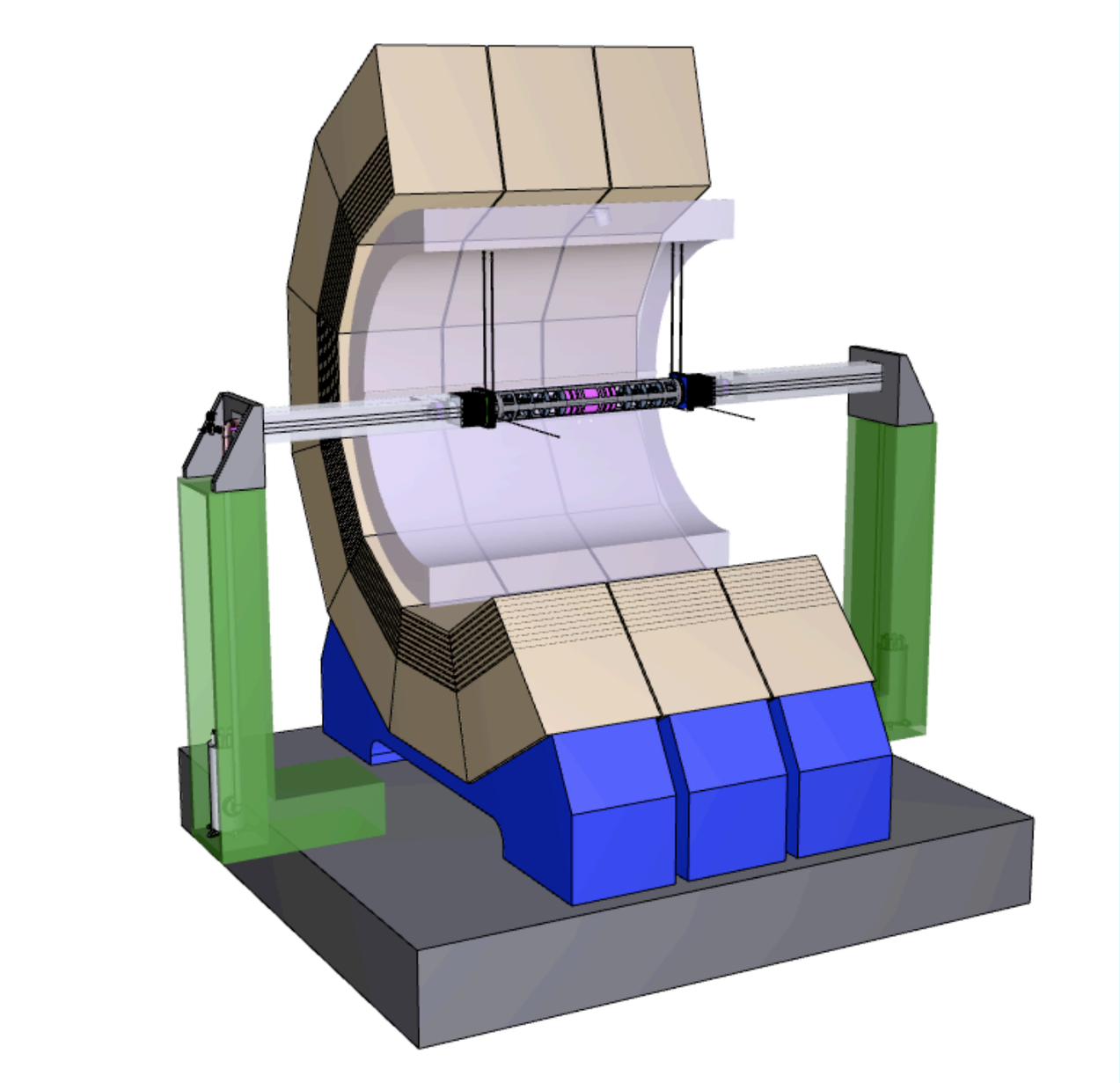

QD0 Support

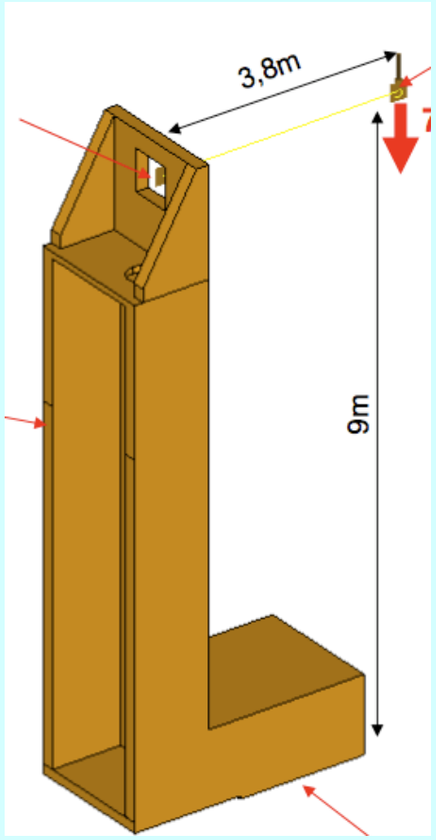

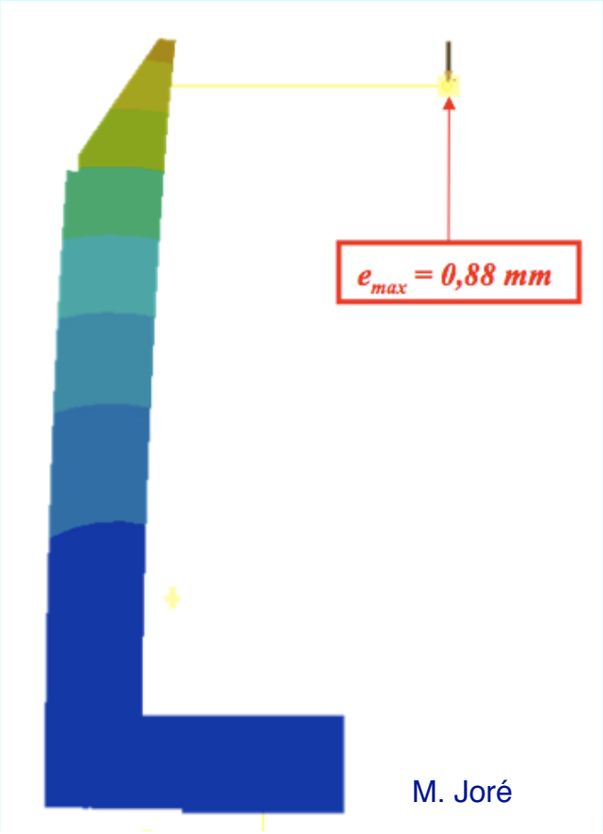

M. Joré

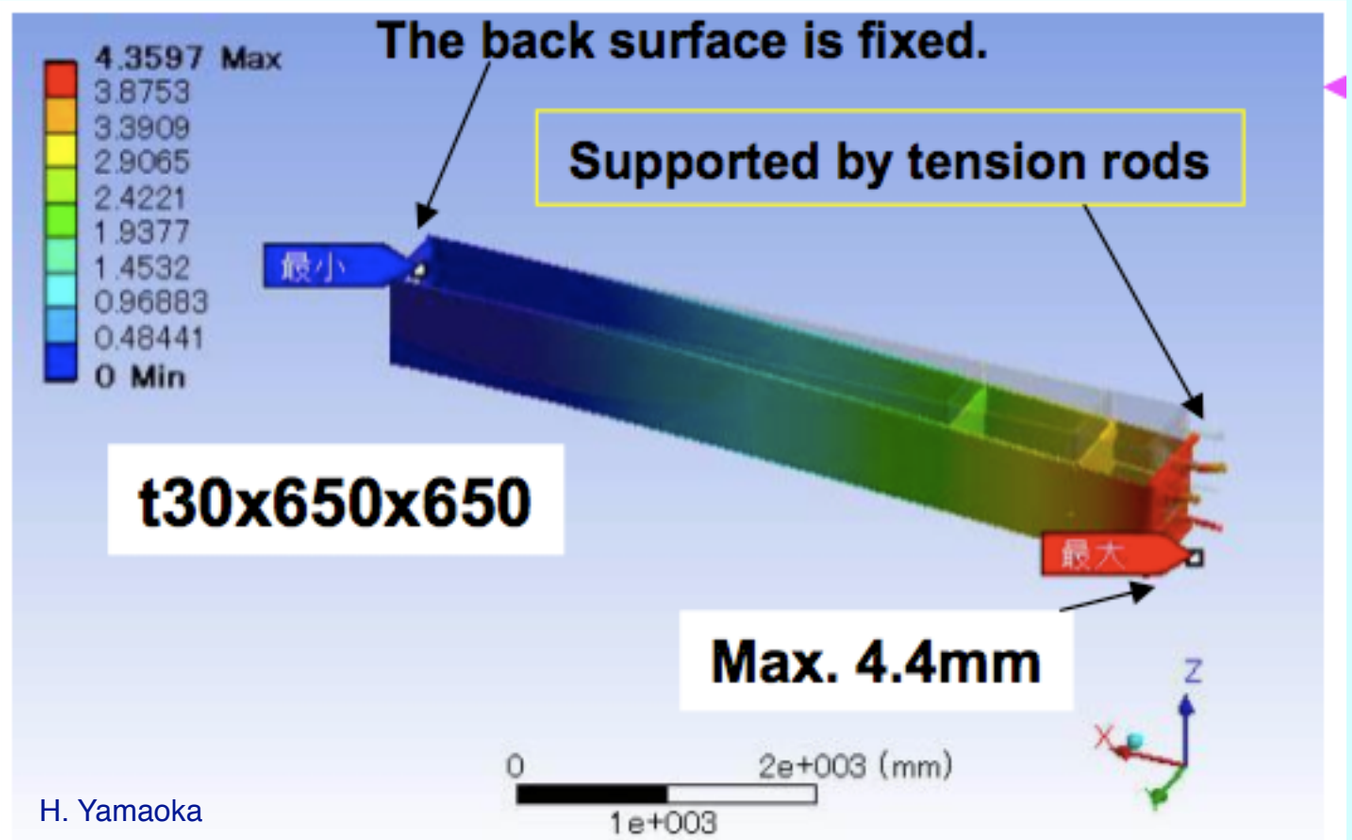

H. Yamaoka

Amplitude due to ground motion

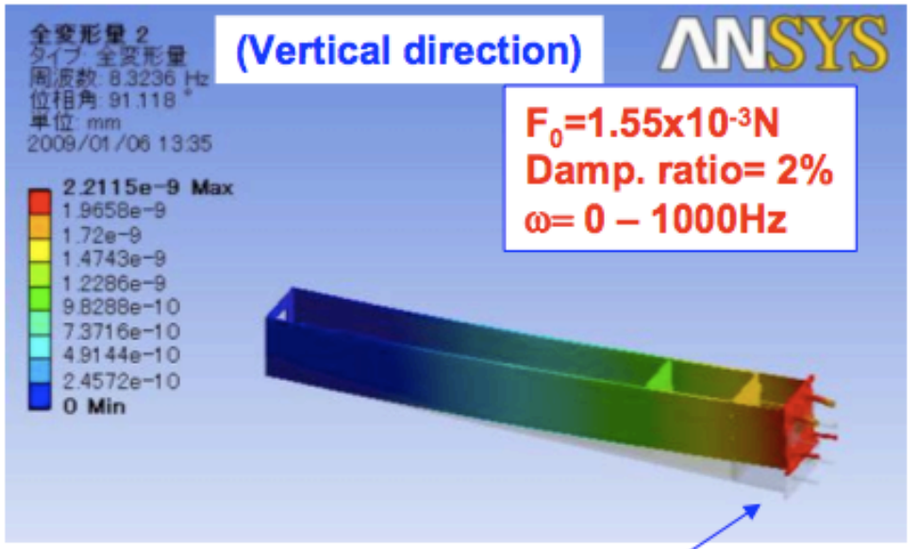

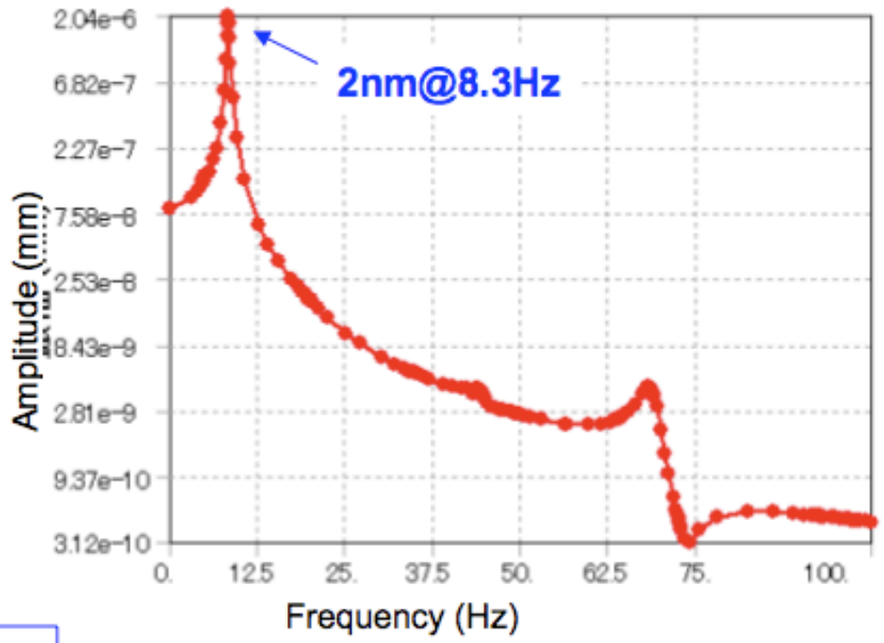

→ Amplitude: 2nm< 50nm @8.3Hz (Vetical direction)

H. Yamaoka

Beam pipe design

Design principles:

- no interference with luminosity
- no interference with pairs while having a small radius for vertexing
- compliant with 7 mrad crossing angle
- as less material as possible (photon conversions, hadron interactions, vacuum)
- low em heat load
- vaccum requirements (pumping)

Made from Beryllium with some support rings (8 kg total mass)

Mechanical behaviour studied

Heat load below 20W

Engineering design needs a lot more effort, close collaboration with manufacturer

Cost around 1-1.5 MEUR (sic!)

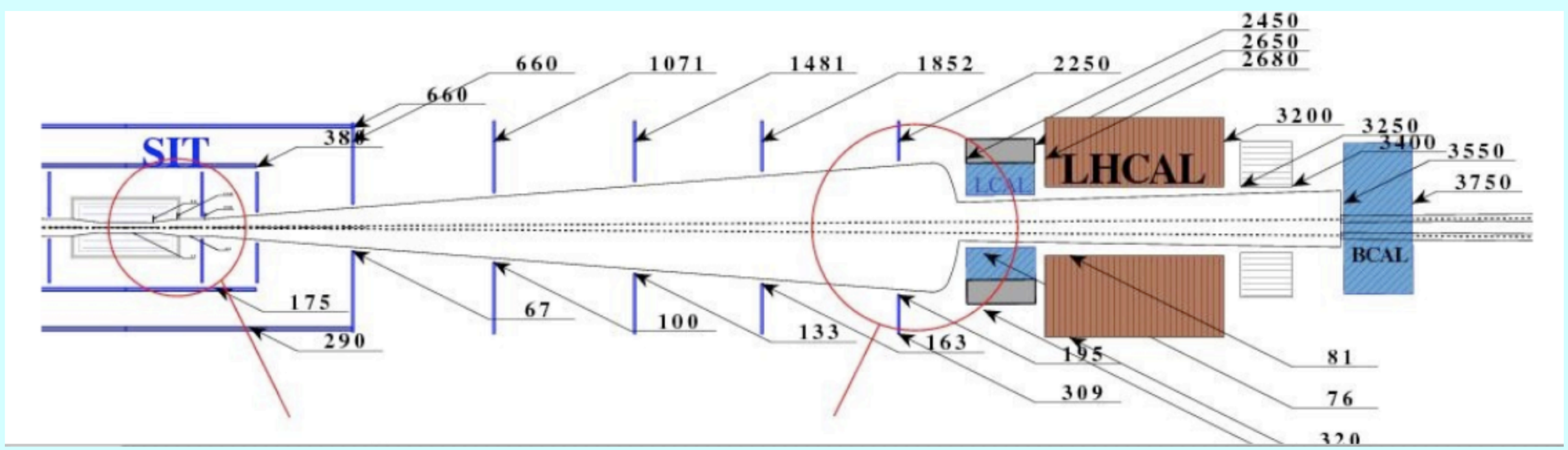

H. Videau et al.

Beam pipe studies

- Detailed studies done at KEK (Y. Suetsugu) and in France (H. Videau et al.)

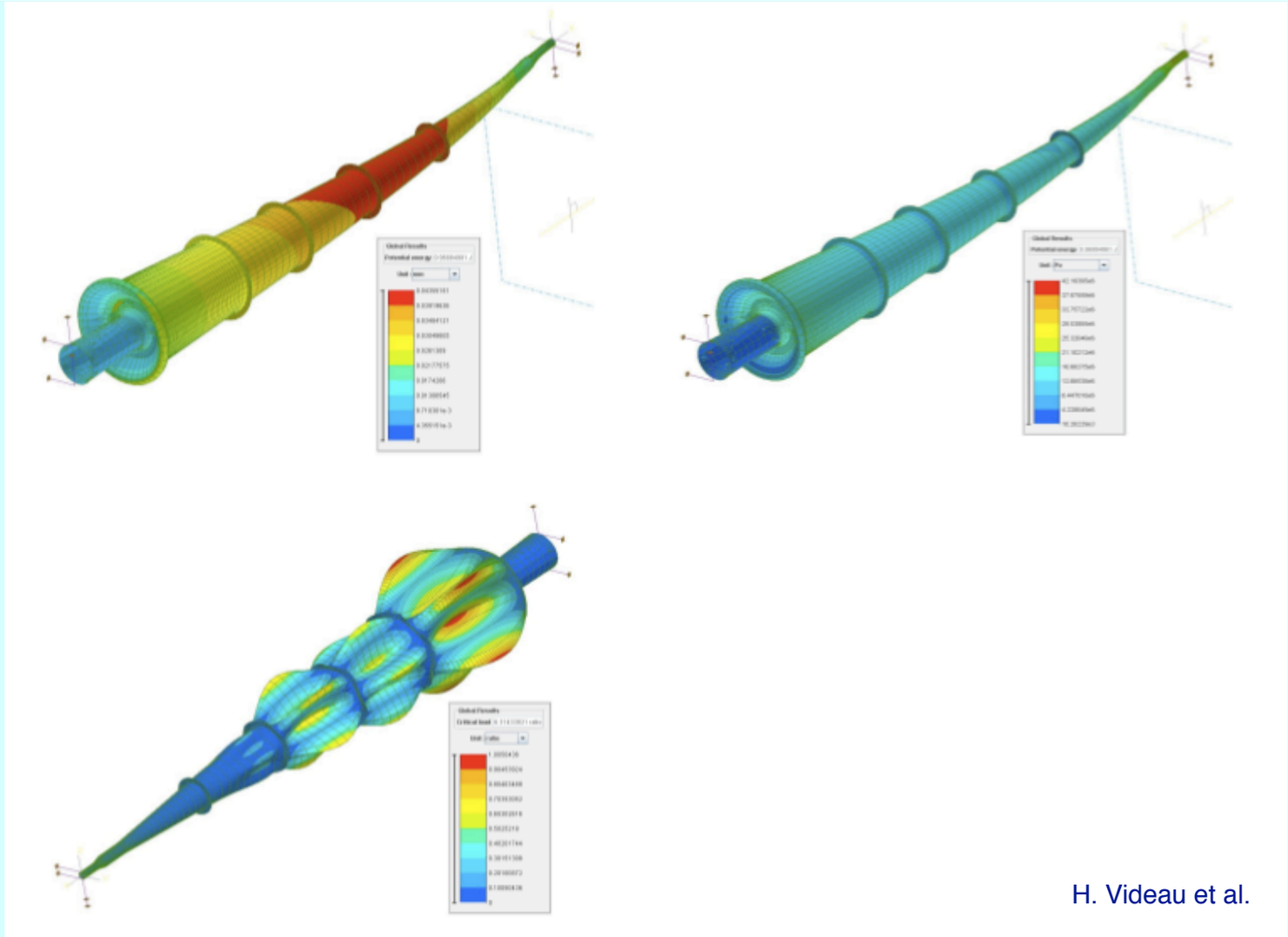

H. Videau et al.

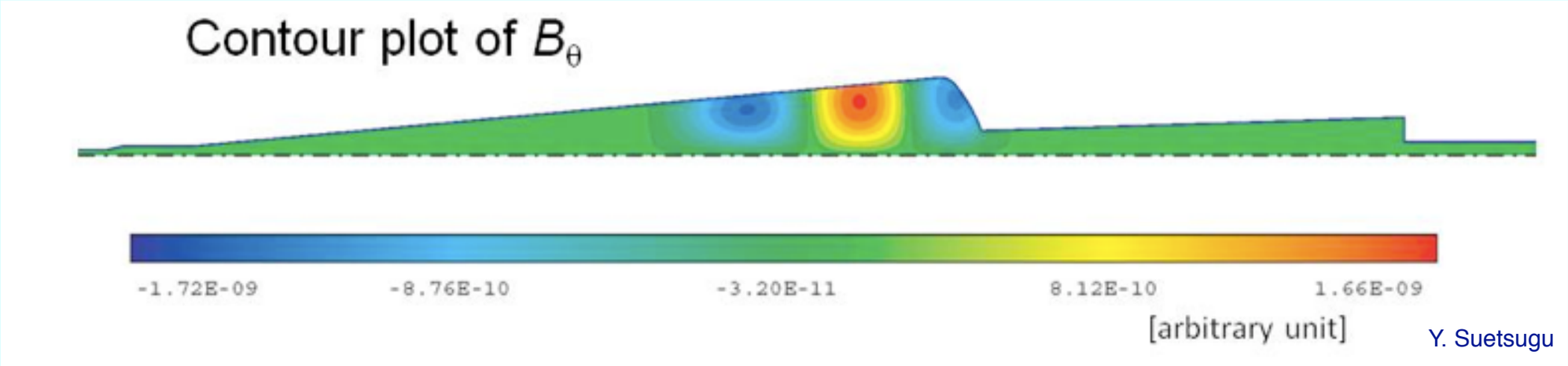

Y. Suetsugu

Machine Induced Backgrounds

- Pair backgrounds have been studied for LDC and GLD in detail
- Needed to re-do simulations with ILD geometries and 3.5T magnetic field
- Low-P (500) backgrounds comparable to 1 TeV nominal

Subdetector	Units	Layer	Nom-500	Low-P-500	Nom-1000
VTX-DL	hits/cm^2/BX	1	3.214±0.601	7.065±0.818	7.124±1.162
		2	1.988±0.464	4.314±0.604	4.516±0.780
		3	0.144±0.080	0.332±0.107	0.340±0.152
		4	0.118±0.074	0.255±0.095	0.248±0.101
		5	0.027±0.026	0.055±0.037	0.046±0.036
		6	0.024±0.022	0.046±0.030	0.049±0.044
SIT	hits/cm^2/BX	1	0.017±0.001	0.031±0.007	0.032±0.012
		2	0.004±0.003	0.016±0.005	0.008±0.002
FTD	hits/cm^2/BX	1	0.013±0.005	0.031±0.007	0.019±0.006
		2	0.008±0.003	0.023±0.007	0.013±0.005
		3	0.002±0.001	0.005±0.002	0.003±0.001
		4	0.002±0.001	0.007±0.002	0.004±0.001
		5	0.001±0.001	0.006±0.002	0.002±0.001
		6	0.001±0.001	0.005±0.002	0.002±0.001
		7	0.001±0.001	0.007±0.002	0.001±0.001
SET	hits/BX	1	5.642±2.480	57.507±10.686	13.022±7.338
		2	5.978±2.360	59.775±8.479	13.711±7.606
TPC	hits/BX	-	408±292	3621±709	803±356
ECAL	hits/BX	-	155±50	1176±105	274±76
HCAL	hits/BX	-	8419±649	24222±744	19905±650

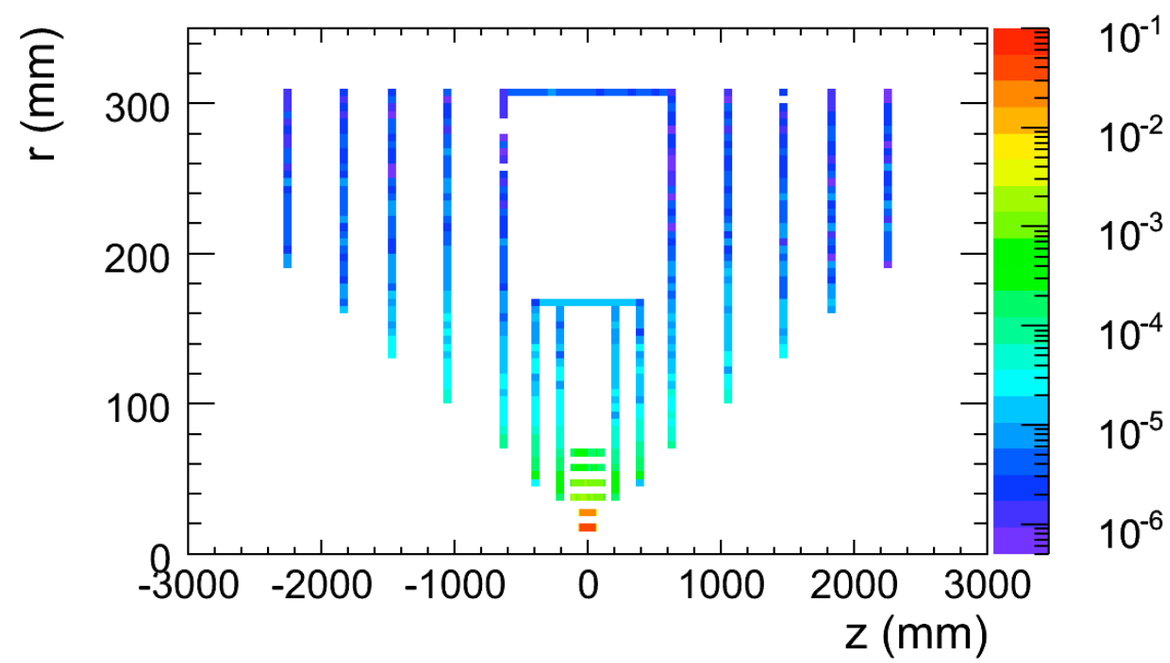

Summary

- The ILD LoI describes the conceptual design of the ILD Machine Detector Interface
- All areas need intense technical studies to converge on an engineering design