Seamless Cavity Development at FNAL

Andy Hocker

FNAL

ECFA-ILC-CLIC Meeting, WG3

21-OCT-2010

Introduction

- Various routes to seamless cavities
  - FNAL has chosen to pursue hydroforming based on the excellent results achieved by Singer *et al.* at DESY
- Goal: fabricate 10-20 nine-cell TESLA-style cavities in order to make a statistically sound case (or not) for
  - Gradient yield improvement
  - Fabrication cost improvement
- No dedicated cavity hydroforming facility exists in US
- Various groups of people in US have dabbled in cavity hydroforming (or related issues) over the years
  - No coordinated effort
- First step was to gather these people together to chart a course for US hydroforming program

US Hydroforming Workshop

- Workshop held at FNAL on 1-SEP-2010
  - Link: http://ilc.fnal.gov/accelerators/workshop.html
- 35 participants --- from labs, universities, and industry
- Ten presentations spread over two sessions:
  - Niobium tube supply
  - Facilities
- Began with a nice "keynote" talk from Singer discussing the DESY hydroforming experience and history
- Workshop provided a good overview of everyone's work and ensuing discussions helped shape a path for the next few years

Black Labs/Wah Chang Nb tube

R. Crooks, BL

- **Tube extruded and flow-formed from fine-grained billet**
- **Hydroformed at DESY, under assembly into 9-cell at TJNL**
- **Tube formed well, we await the RF test results**
- **Consider this our baseline tube supply**
  - **Process still has room for optimization**

Single-crystal tubes

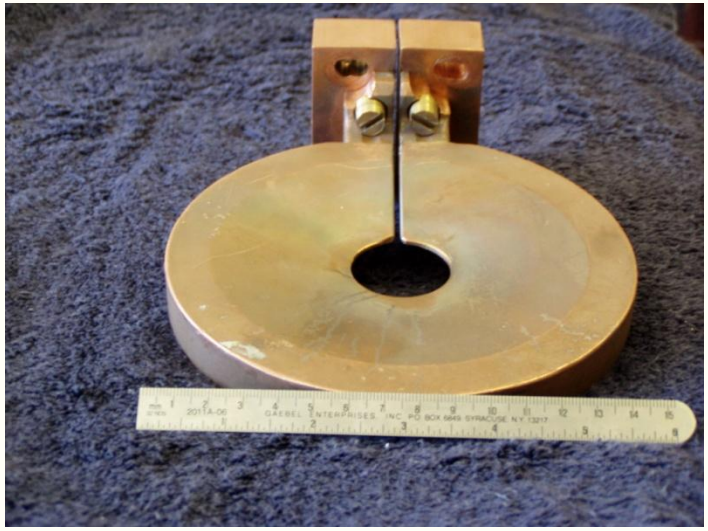

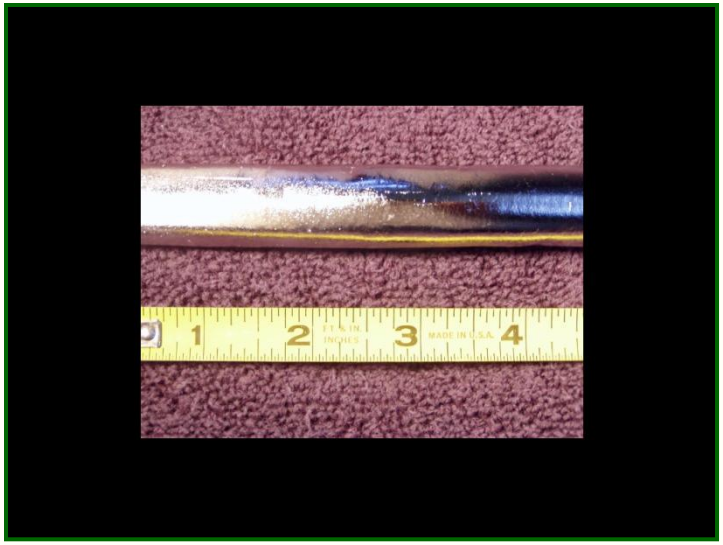

J. Murphy, UNR

- **Float-zone remelting of tubes via inductive coil**
- **"Beyond the baseline," but intriguing**
  - **90% elongation --- possibility for eliminating necking step?**
  - **All the other nice properties of single crystal cavities**
- **Only small tubes so far, but scale-up possible**

Fine-grain tubes via ECAE

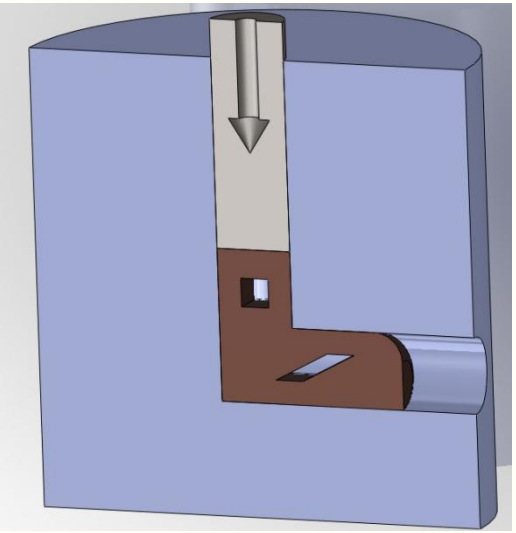

T. Hartwig, TAMU

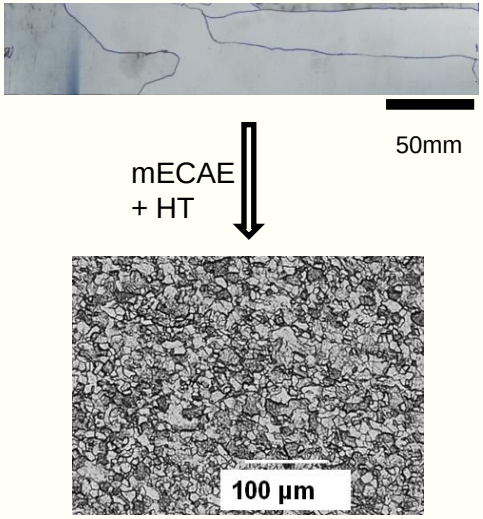

- **Achieving desired microstructure via severe plastic deformation (Equal Channel Angular Extrusion)**
- **Selling points: 20-50 micron grains, long-range uniformity, some control over texture**
- **This is an example of an alternative tube process**
  - **More examples were provided via pre-recorded video from E. Palmieri (INFN):spinning, reverse deep-drawing**

What foundation is needed?

- Crystal Plasticity simulation of deformation and texture evolution
  - This is at the microstructure scale
  - Need to be able to predict both single and poly crystal evolution correctly

→ Evolution rules for yield surface based upon metal physics so that property evolution can be made more efficient to simulate deformation at the part (cavity) scale

- Experiments designed to assist development and validation of material models
  - → Heavily instrumented hydroforming facility
- Identify rules for Recrystallization

T. Bieler, MSU

Facilities

- **OSU CSMM did some legwork to ID good companies willing to work on developing facility**
  - **Also presented capabilities at OSU for tube bulge testing and SEM**
- **Interlaken Technology Corp. in the business of designing and building machines like what we want**
- **American Hydroformers, Inc. has presses of the appropriate scale and has played with cavity forming**
  - **Confirmed that a simple expansion doesn't work at all**

T. Collings, OSU

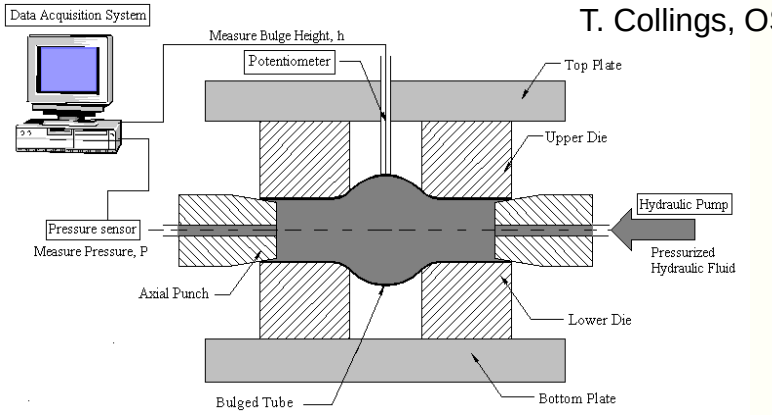

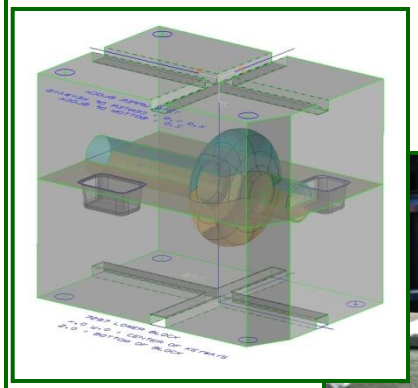

Cavity die

M. Blasi, AHI

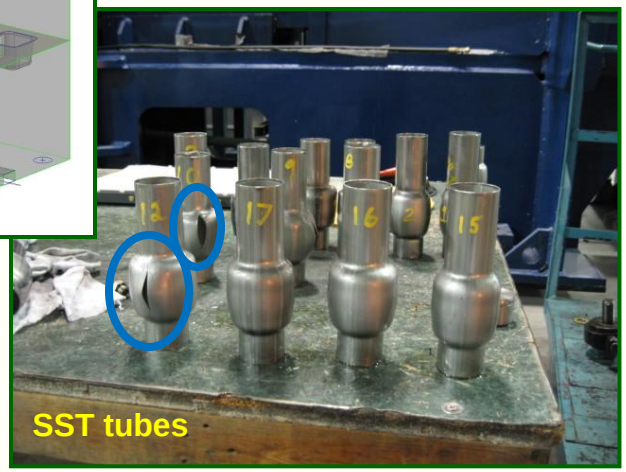

Fermilab's plan of action

- Funding in FY11 for this R&D effort has been provided by ART
- Buy tubes
  - Some extruded billet material left over from initial manufacturing run of Black Labs/Wah Chang tube
    - Provide clear specifications on tube properties
  - Provide samples to those doing materials characterization
- Submit Request For Proposal for design/fabrication of equipment for a nine-cell cavity hydroforming facility
  - We expect companies to draw upon the experience gained with the machines at DESY and KEK, but not necessarily copy/paste
  - The proposals should include a plan for obtaining any material properties data needed for the design
  - Target March 2011 for awarding a contract
- Support "beyond the baseline" R&D where possible
  - Leverage alternate sources of funding (SBIRs, etc.)

Conclusions

- Seamless cavity R&D in the US is still in its infancy
  - But we are not starting from zero!
- FNAL workshop helped to chart a course for the future
- Our plan right in line with what Singer identifies as the "next steps" for hydroforming
  - Industrialization of the established process
  - Real-world cost evaluation
- The planned time scale is to be producing cavities in about two years
- There are already a number of efforts underway to improve and/or optimize tube fabrication