MDI and Integration Update

Karsten Büßer
DESY

ILD Meeting
21. October 2010

Agenda

Main integration and MDI topics under discussion:

- Inner detector integration
- Realistic detector services and cabling for input in simulations
- Adaption of ILD assembly/integration to possible ILD mountain sites
- Common detector motion system for ILD and SiD

Inner Region Integration Studies (M. Joré)

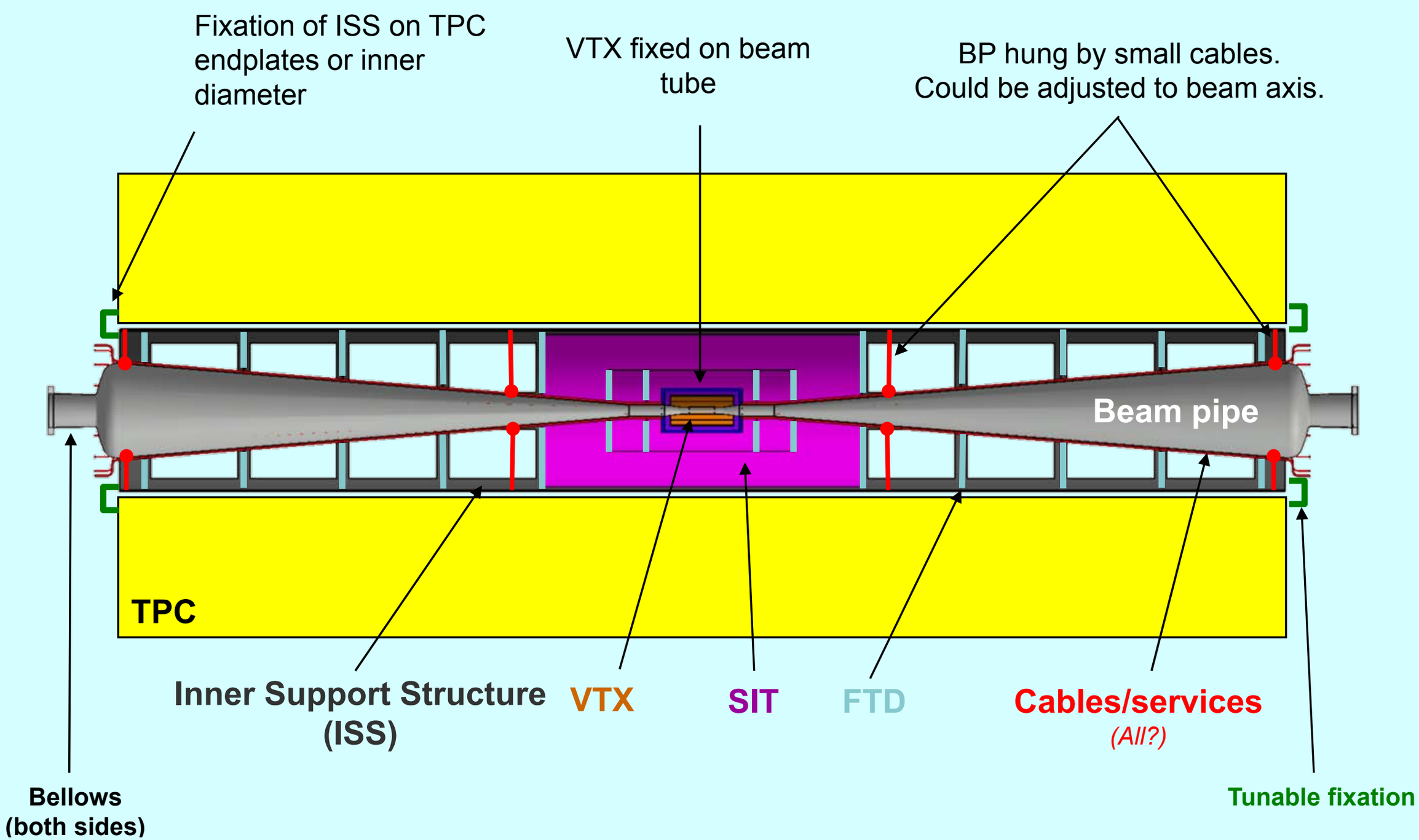

Inner Region Integration Studies (M. Joré)

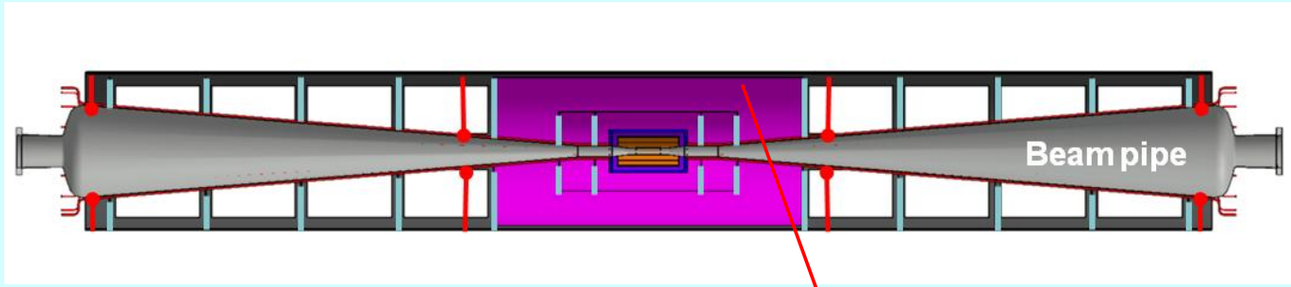

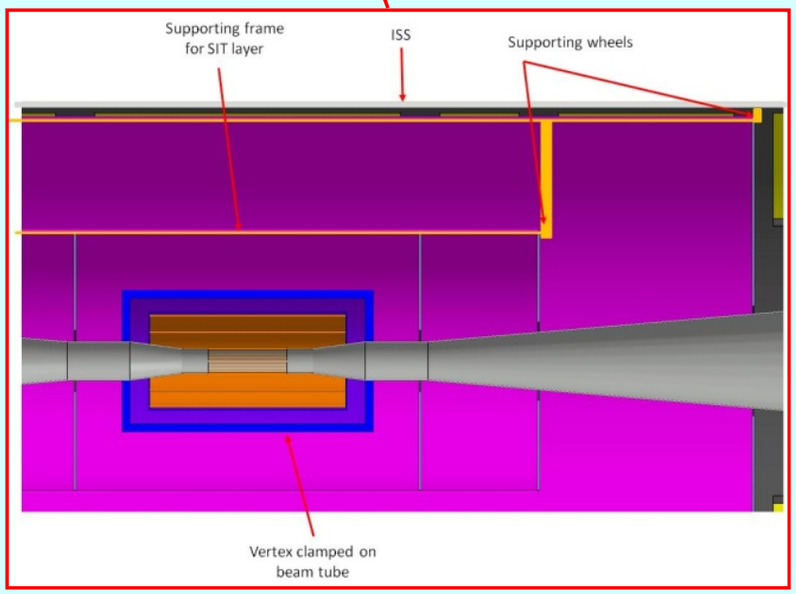

- Components to be supported :
  - **Vertex : 300g supported on FTD3**
  - **FTD : 500g / disks**
  - **SIT : estimated at 5Kg supported on FTD3**
  - **Beam pipe : ab. 15Kg with wires**
  - **Cables : ab. 15Kg supported with FTD disks (ab. 1Kg/disks)**

- Material : Carbone fiber / epoxy composite :
  - **Young modulus : 50GPa**
  - **Density : 1750Kg/m3**
  - **First assumed to be isotropic**
    - Realistic with the pure traction/compression loading (flexure of the tube)

Inner Region Integration Studies (M. Joré)

- Semi tube with reinforcement rings

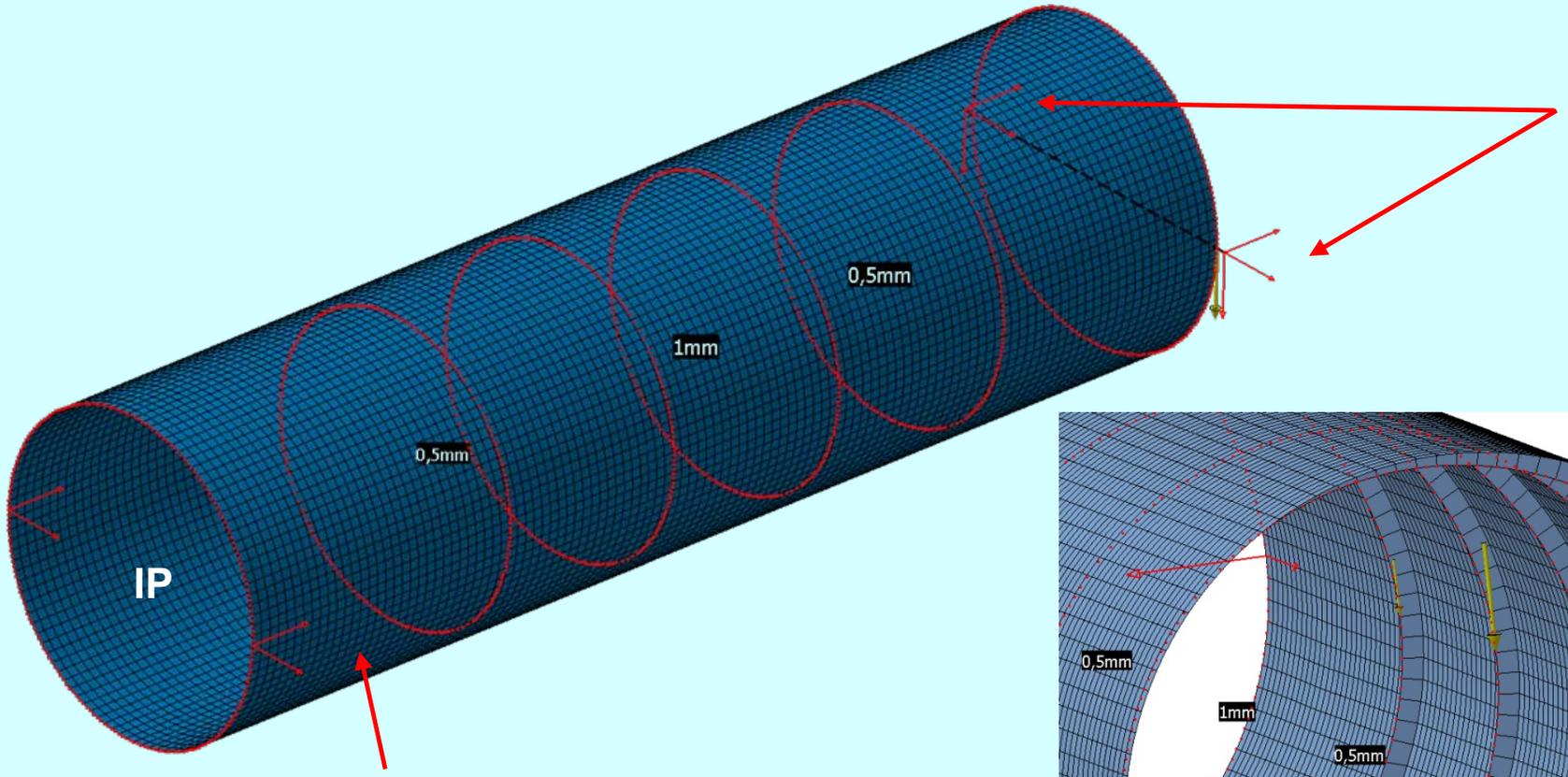

Fixation on TPC

Ring 0,5mm thick

Main tube 1mm thick

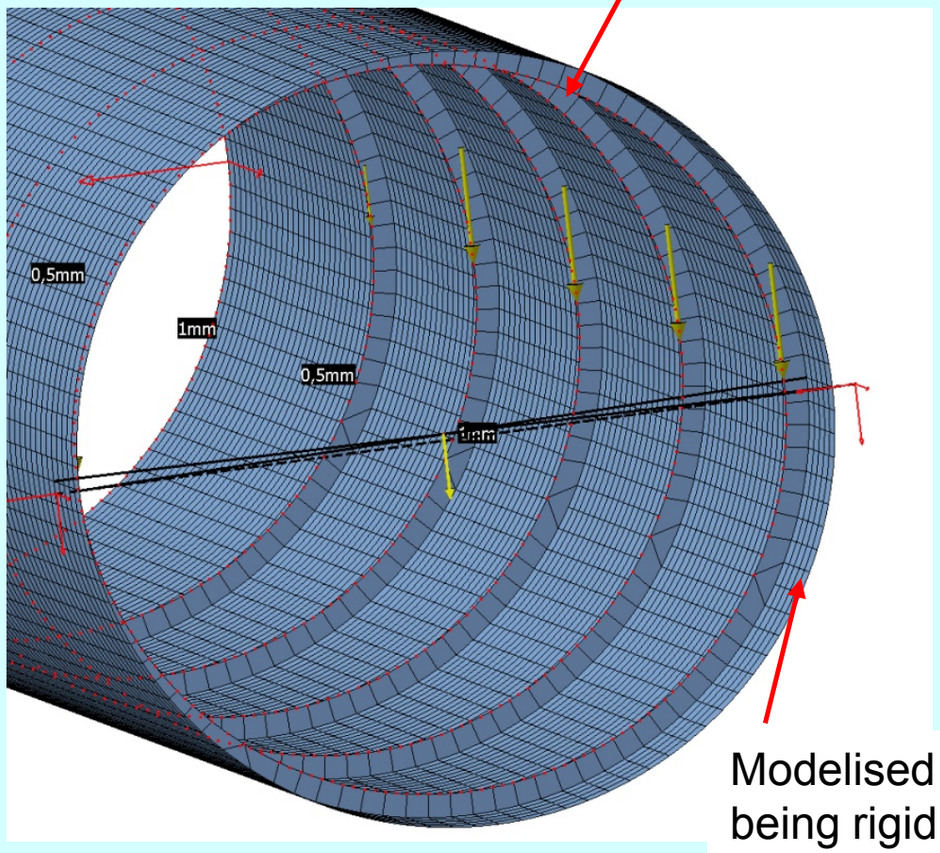

Modelised as being rigid

Inner Region Integration Studies (M. Joré)

- Displacement

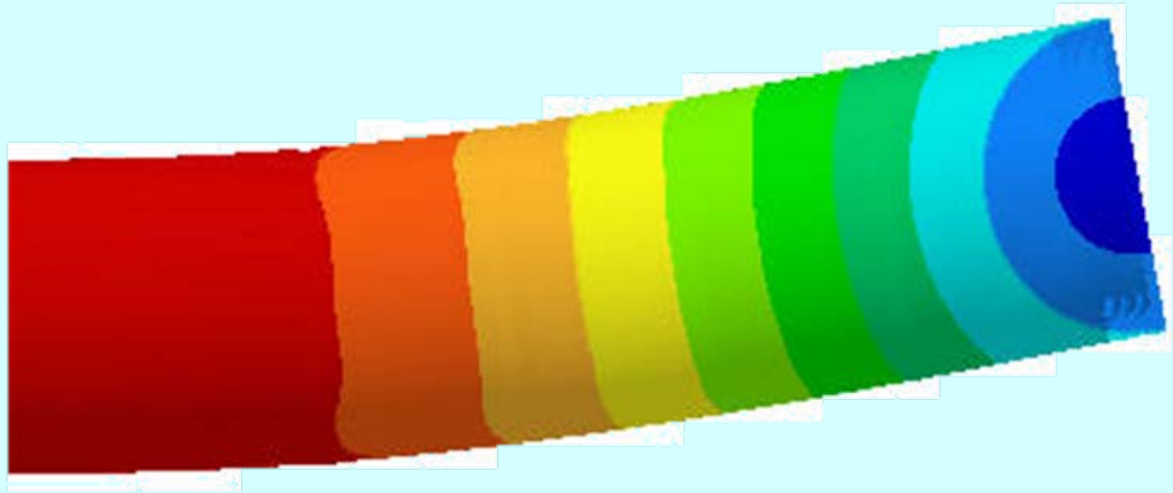

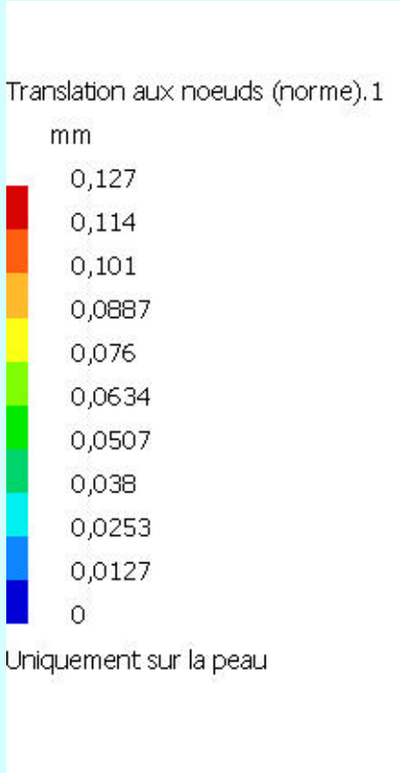

- Stress

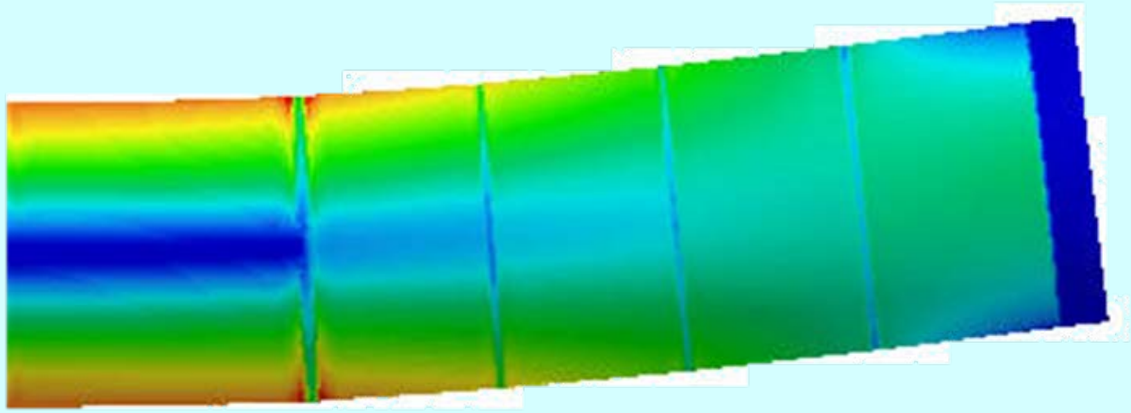

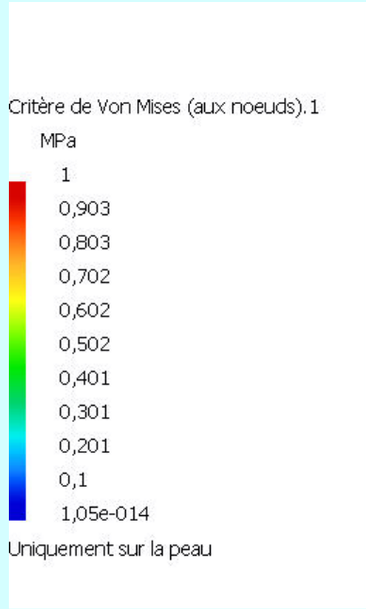

Inner Region Integration Studies (M. Joré)

- Rough estimation seems fine :
  - **Max displacement of about 0,1mm**
  - **First resonant frequency at 90Hz**
  - **Thickness of tube could be 1mm of CFRP (P≈20Kg)**
  - **0,33% X0**

    ➔ *Could be implemented in the simulation*

- But effort is needed to produce a more detailed design, needed for DBD 2012 :
  - **Reduce X0?**
  - **Improve simulation with real composite properties**
    - Who could perform this because I'm not expert on CFRP structure?
  - **How to split the tube?**
  - **Connection pieces (more material)**
  - **Connection to TPC (more material)**
  - **Design of BP wire supporting system**
  - **Add holes for assembly (use of temporary support)**

Detector Services Updates (C. Clerc)

Services section vs way-out

Missing : TPC cooling
Liquid supply line = 5 mm ID; 7 OD
Vapor return = 8 mm ID; 10 OD

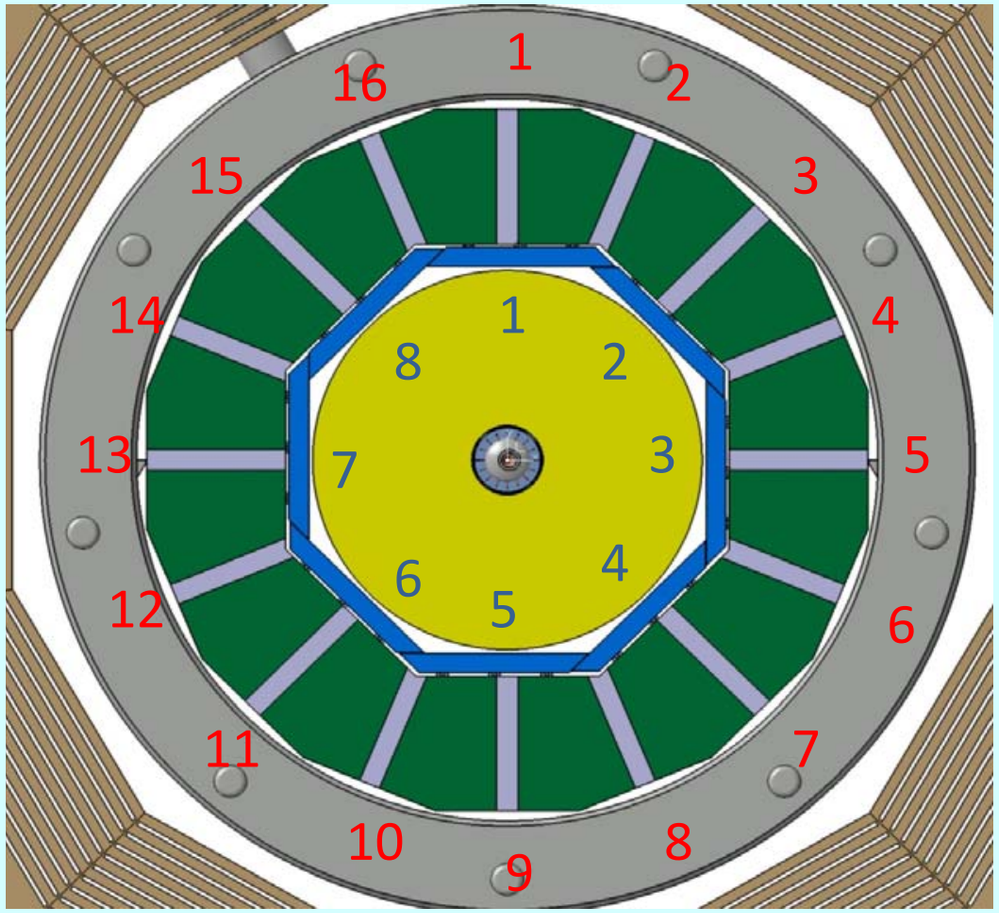

FACE Z-

	Cables				Ecal cooling		
Way in	Hcal	TPC	Ecal Barrel	Ecal Endcaps	Water Barrel Water Endcaps	Endcaps	Total cm²
1	100	0					100
2	0	10	30	7		0	47
3	100	0					100
4	0	10	30	7		0	47
5	100	0					100
6	0	10	30	7	42	14	103
7	100	0					100
8	0	10	30	7	28	14	89
9	100	0					100
10	0	10	30	7	14	14	75
11	100	0					100
12	0	10	30	7	28	14	89
13	100	0					100
14	0	10	30	7		0	47
15	100	0					100
16	0	10	30	7		0	47

Worse case : path (6), 103 cm²

Detector Services Updates (C. Clerc)

Gap : Barrel-endcaps

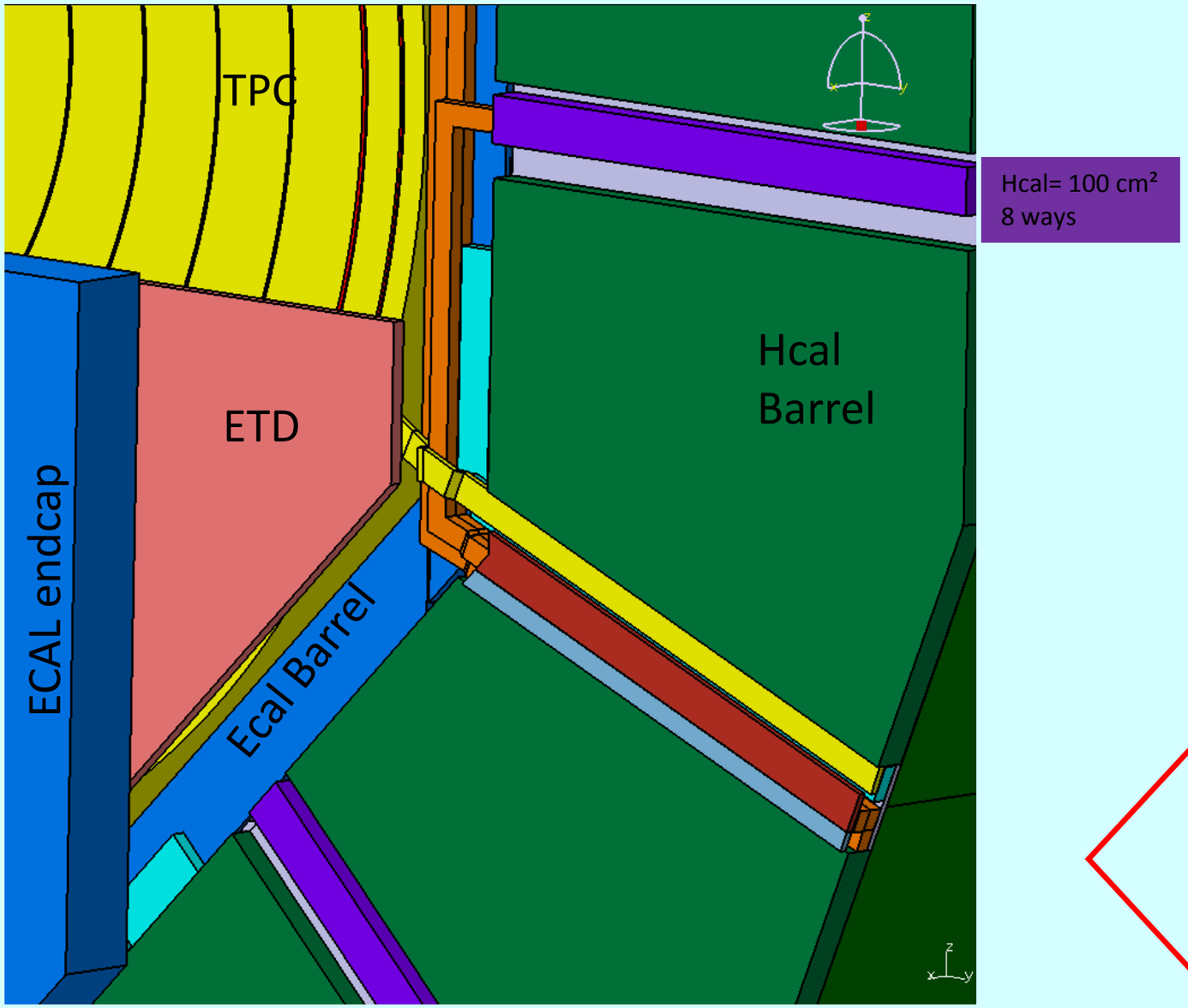

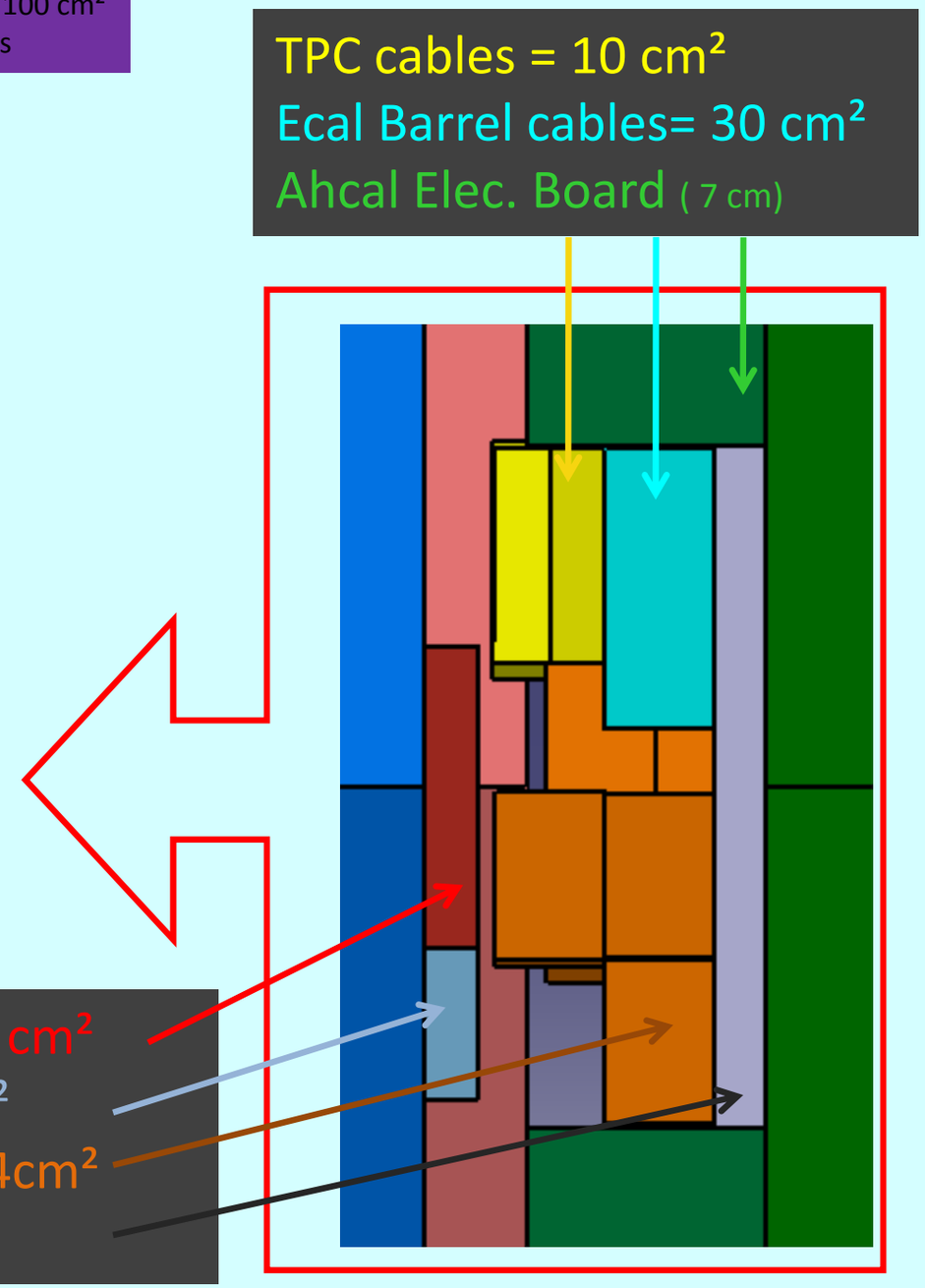

Detector Services Updates (C. Clerc)

Ecal-Hcal

Fixing system :3 rails Alu
10.3x3.5 cm² each

Cooling :
2 lignes in/out ∅16 per module
then 2 lignes in/out ∅6 par column

Cables
10 cm² per module

LDA & Front-end

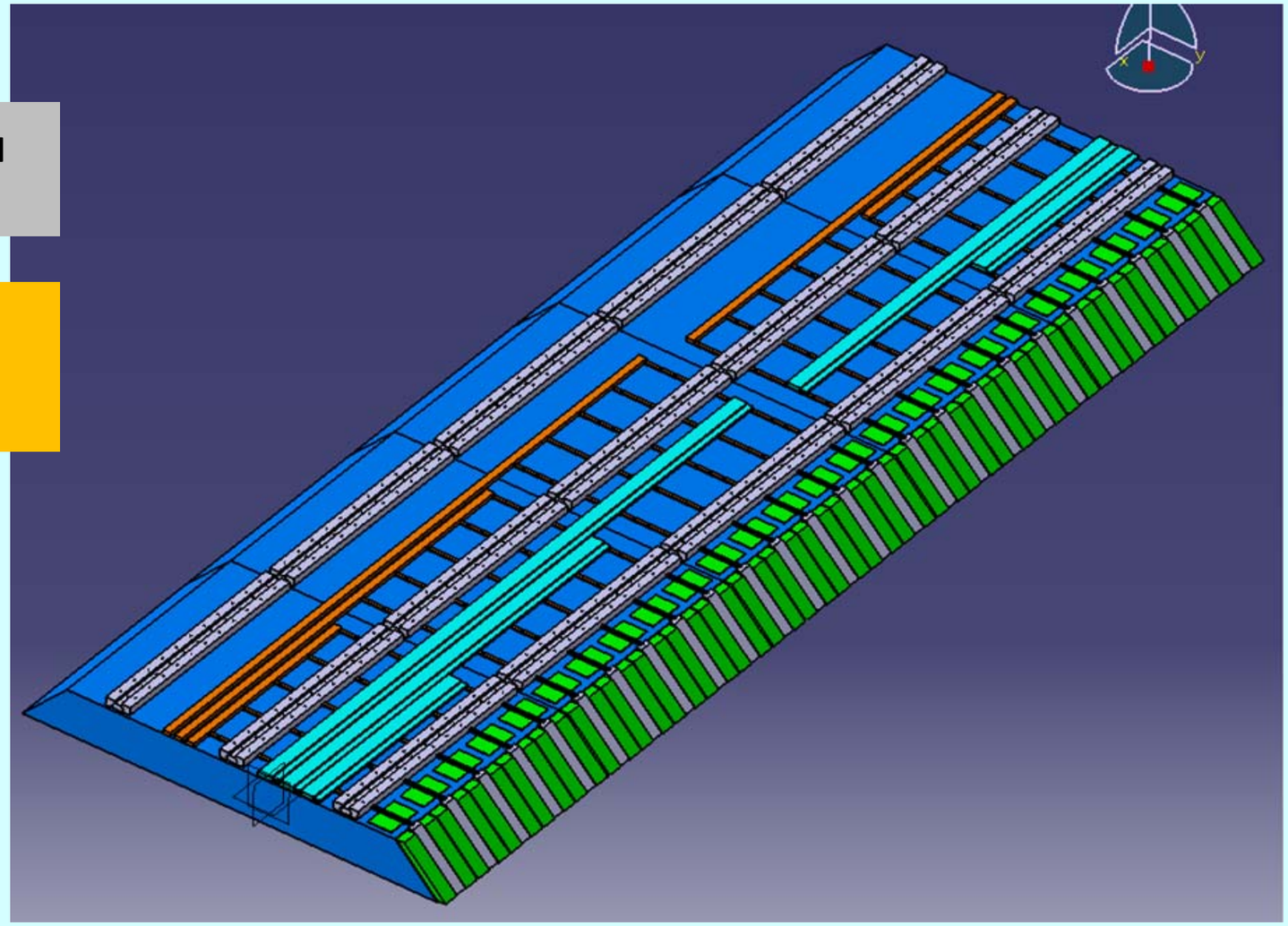

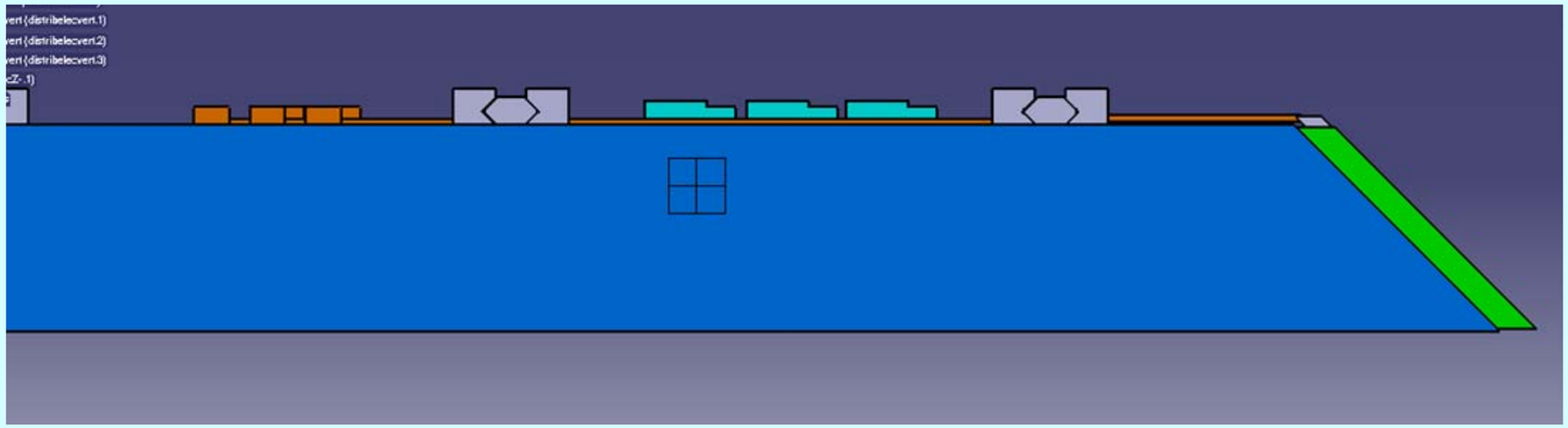

Detector Services Updates (C. Clerc)

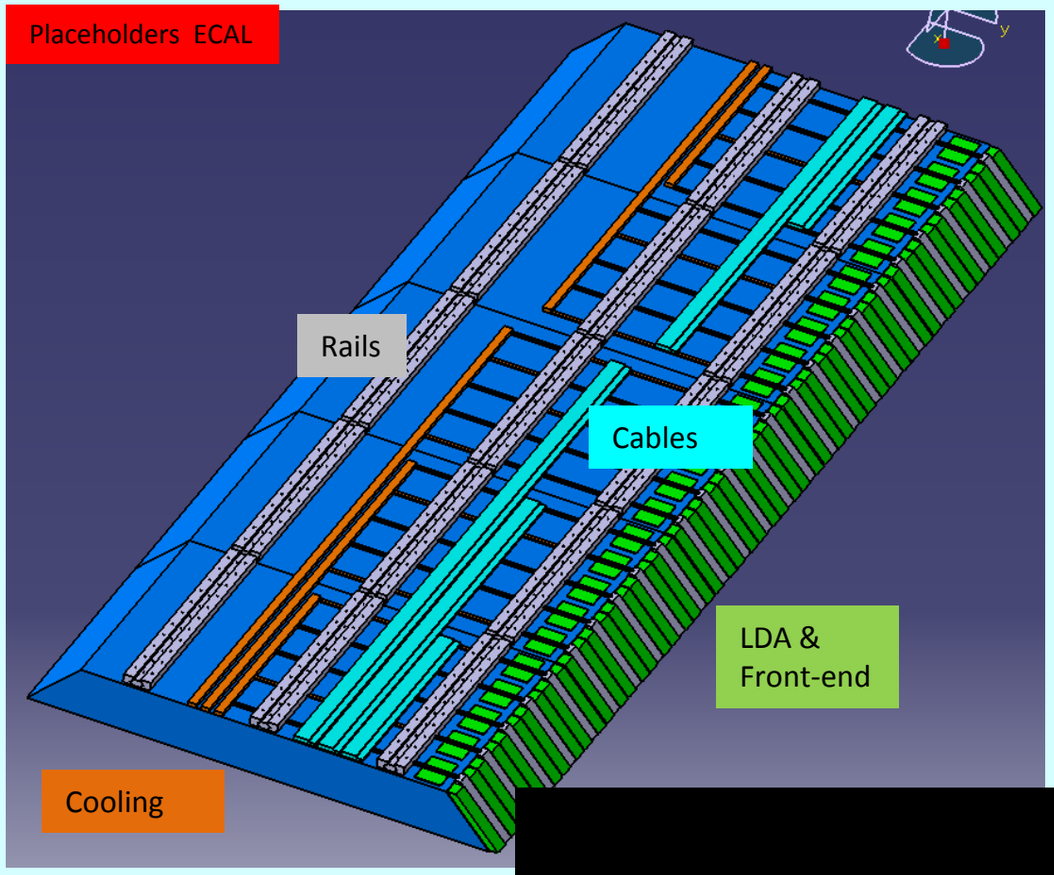

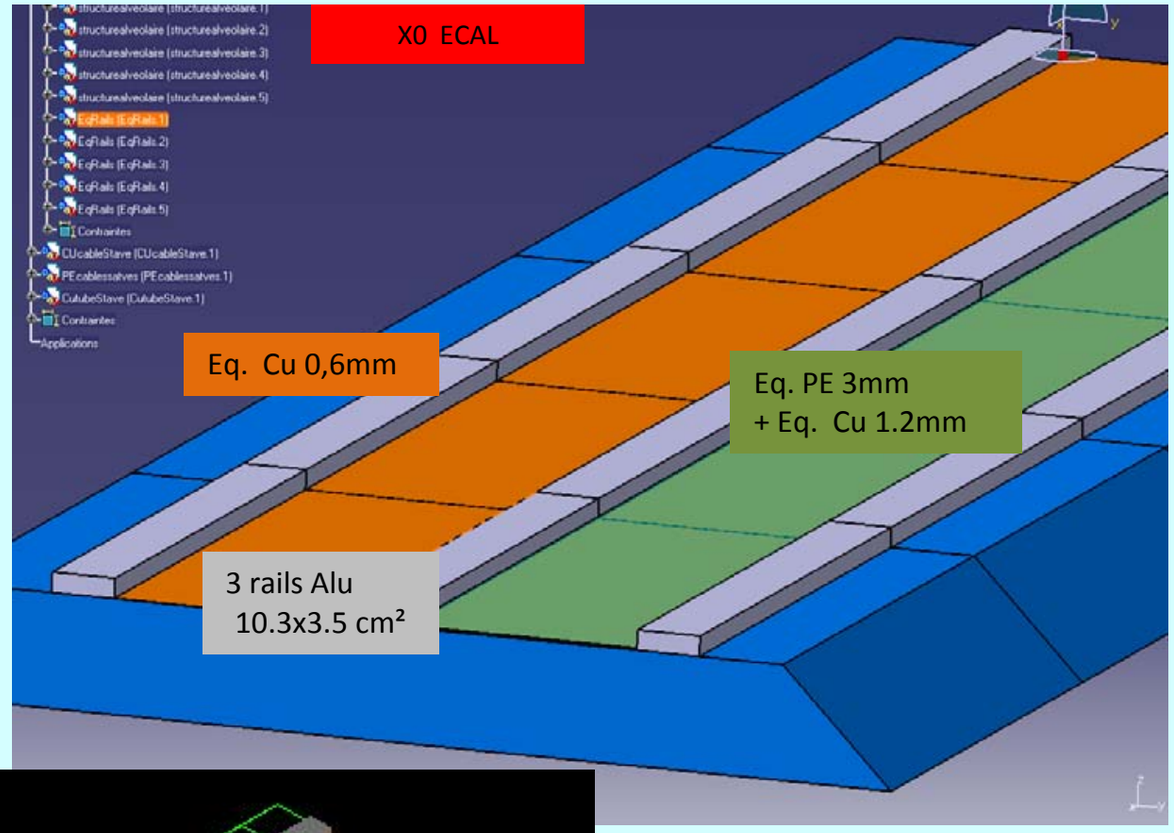

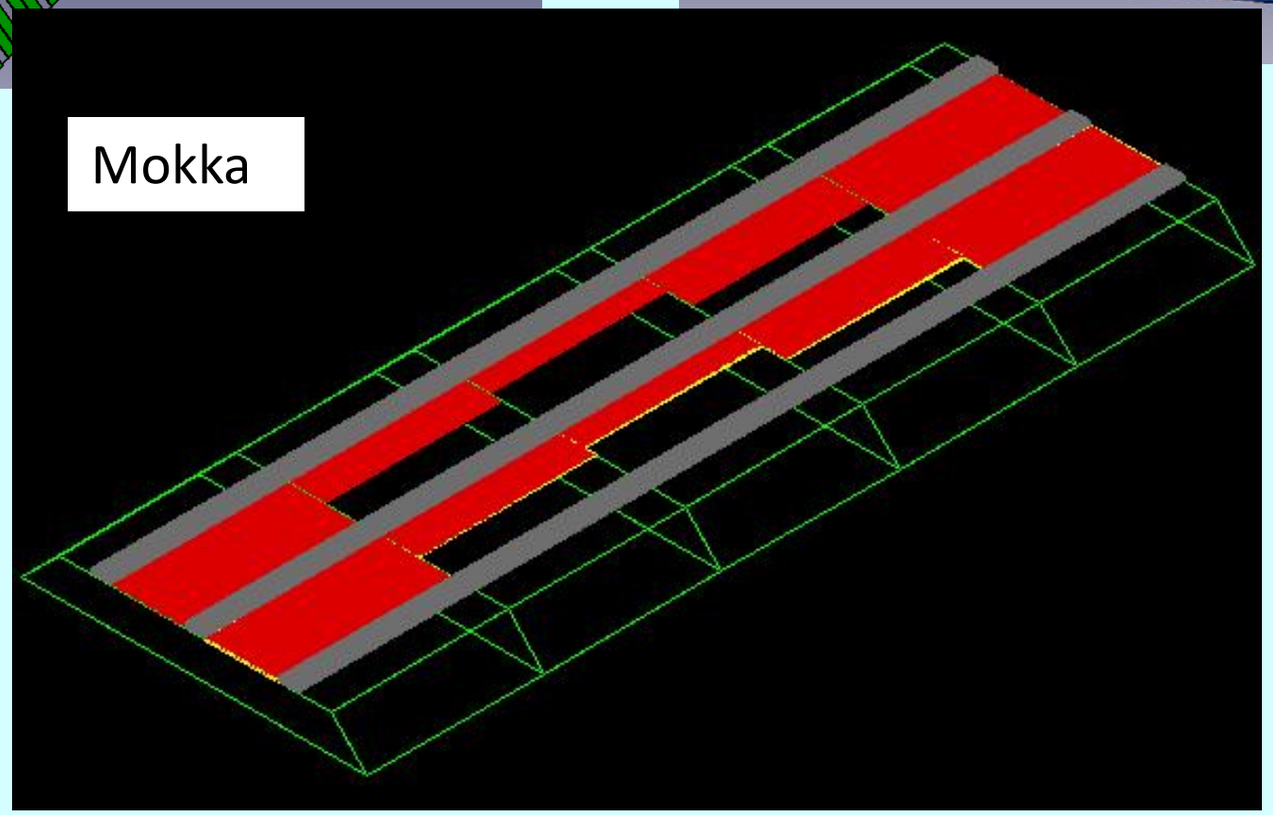

Detector Services Updates (C. Clerc)

In the 16 ways in front of Hcal

- Support SS 1.5 cm thick
- Polyethylene
- Cu

	Z-	Z+	Average
Cu (mm)	0,82	0,74	0,78
Cu X0	57,01%	51,41%	54,21%
PE	2,75	2,56	2,65
PE X0	5,85%	5,44%	5,65%

In MOKKA !

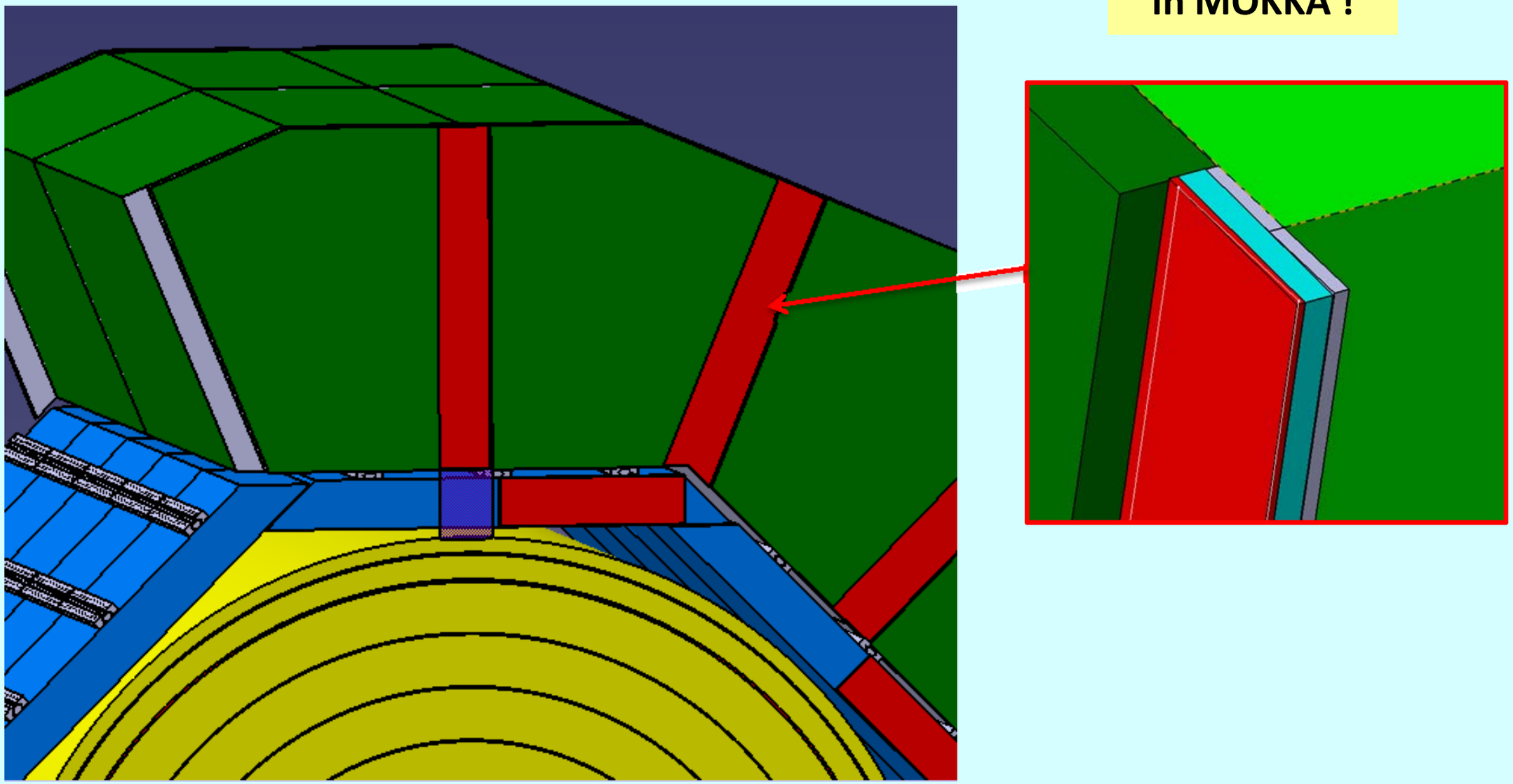

Detector Services Updates (C. Clerc)

In the 8 ways in front of Ecal stave

- Polyethylene
- Cu

Ecal front part

	Z-	Z+	Average
Cu (mm)	0,52	0,35	0,44
Cu X0	36,34%	24,22%	30,28%
PE	1,24	0,83	1,04
PE X0	2,65%	2,20%	2,43%

In MOKKA !

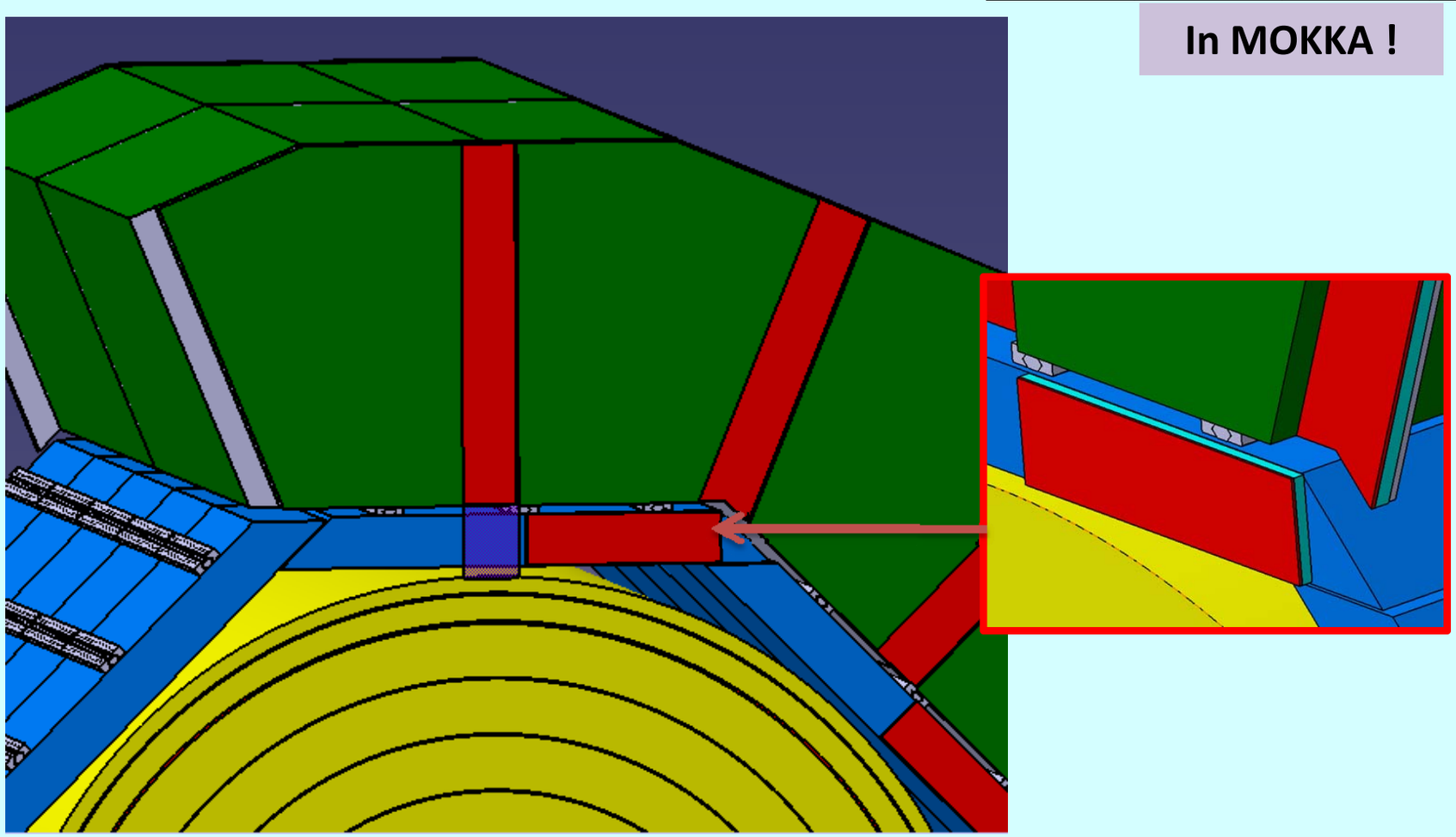

Detector Services Updates (C. Clerc)

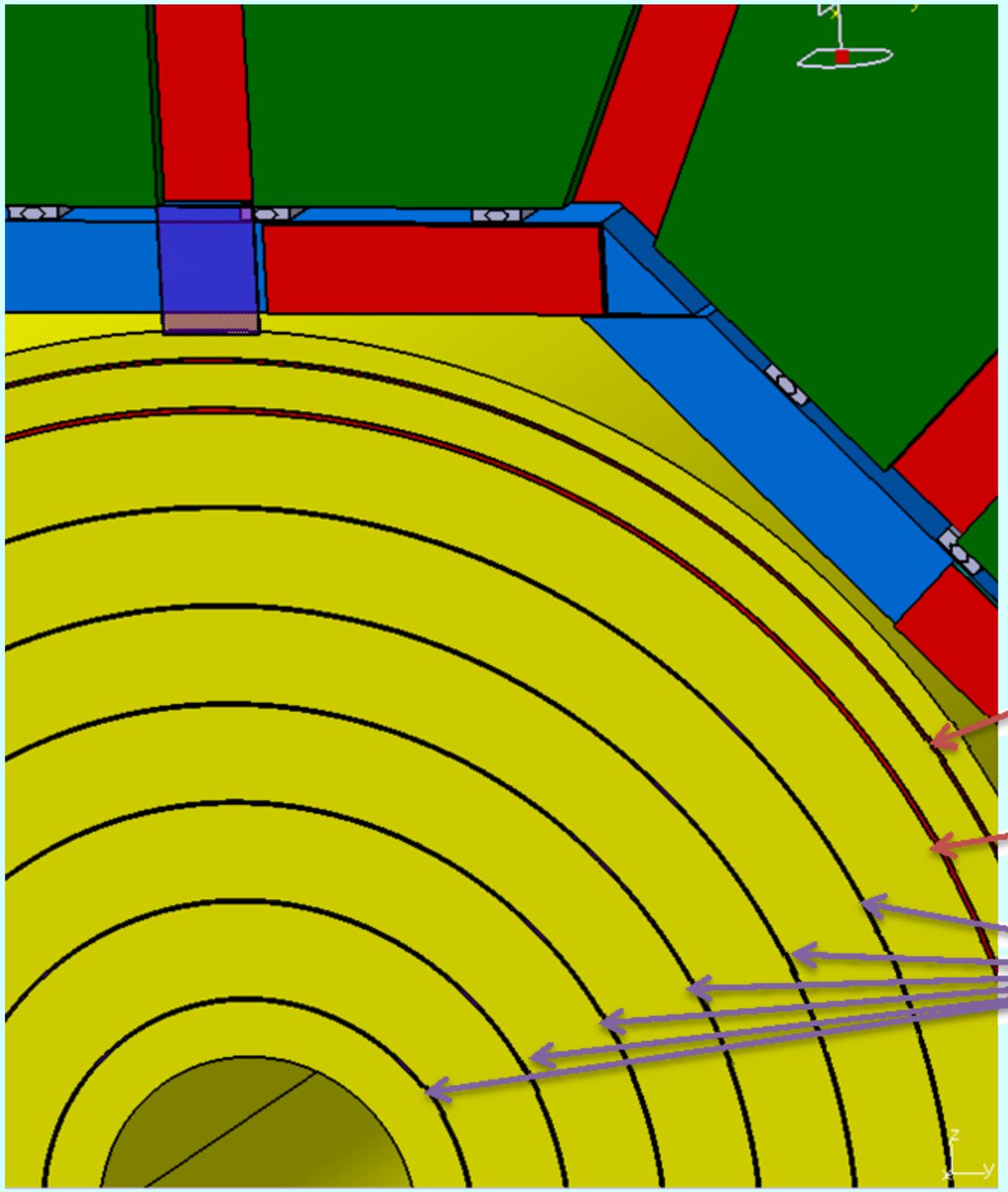

rings of equivalent thickness in copper

Liquid supply ring 7x2.7 mm²

Vapor return ring 10x2.8 mm²

6 Cooling tubes 4x1.9 mm²

IN MOKKA !

Detector Services Updates (C. Clerc)

Now....

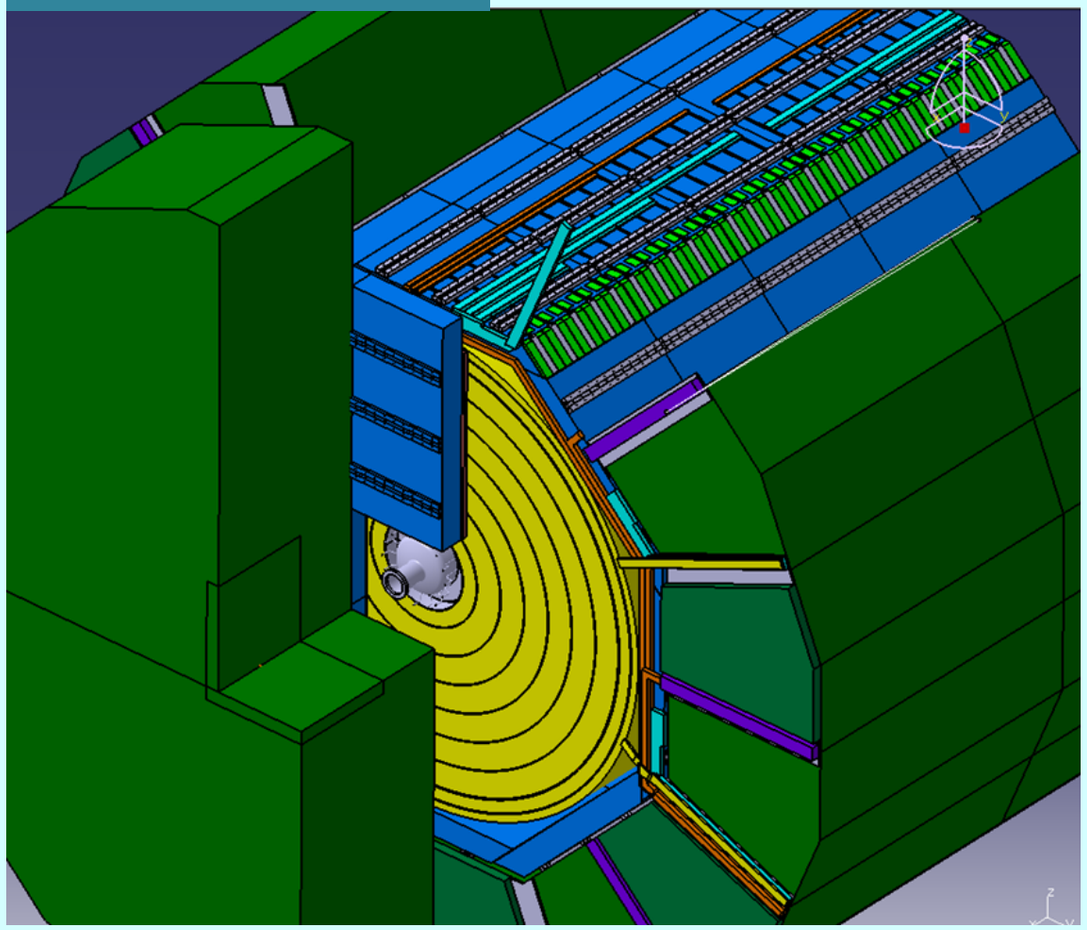

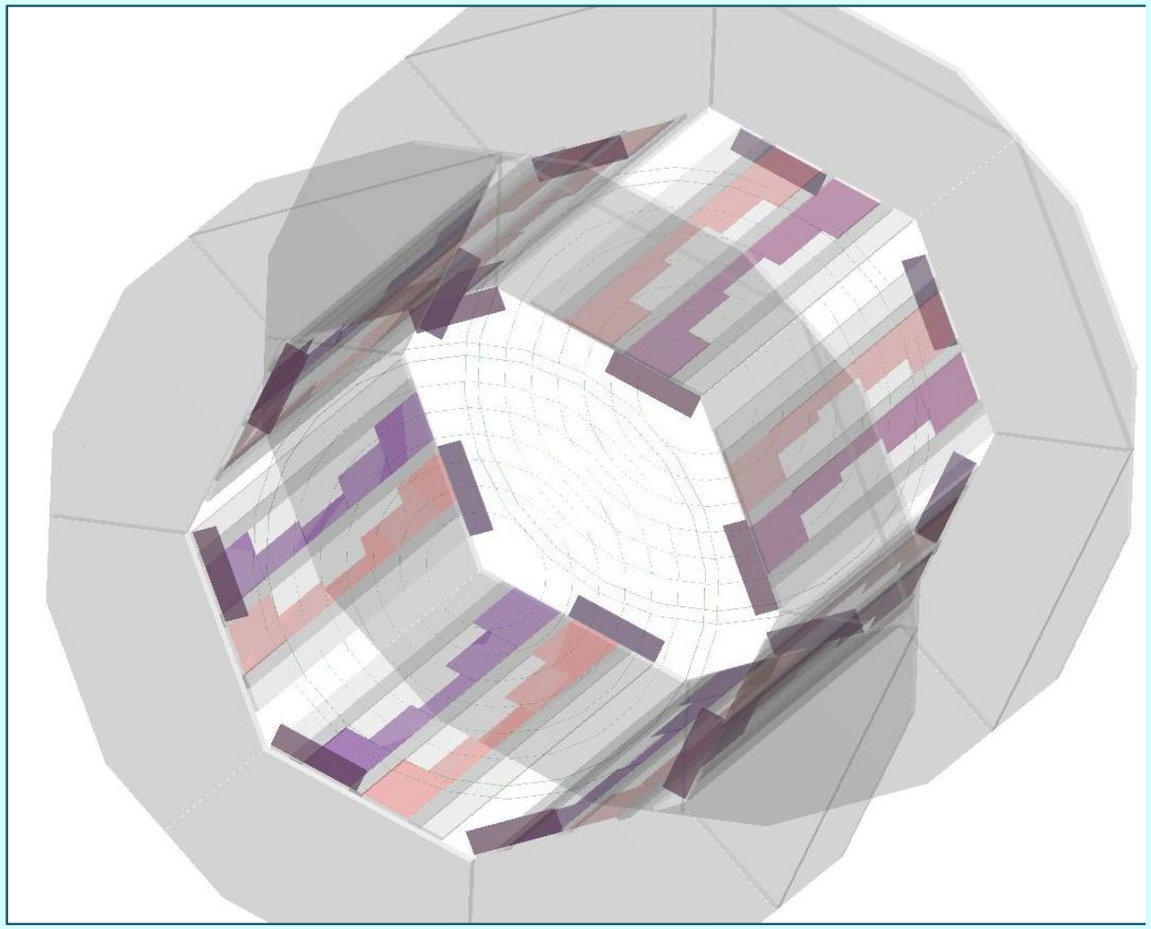

Then....

- Higher level of dissymetry in the gap Barrel-endcap in the simulation ?
- DHcal model
- Inner part ???

Alternative Detector Assembly Studies (Y. Sugimoto)

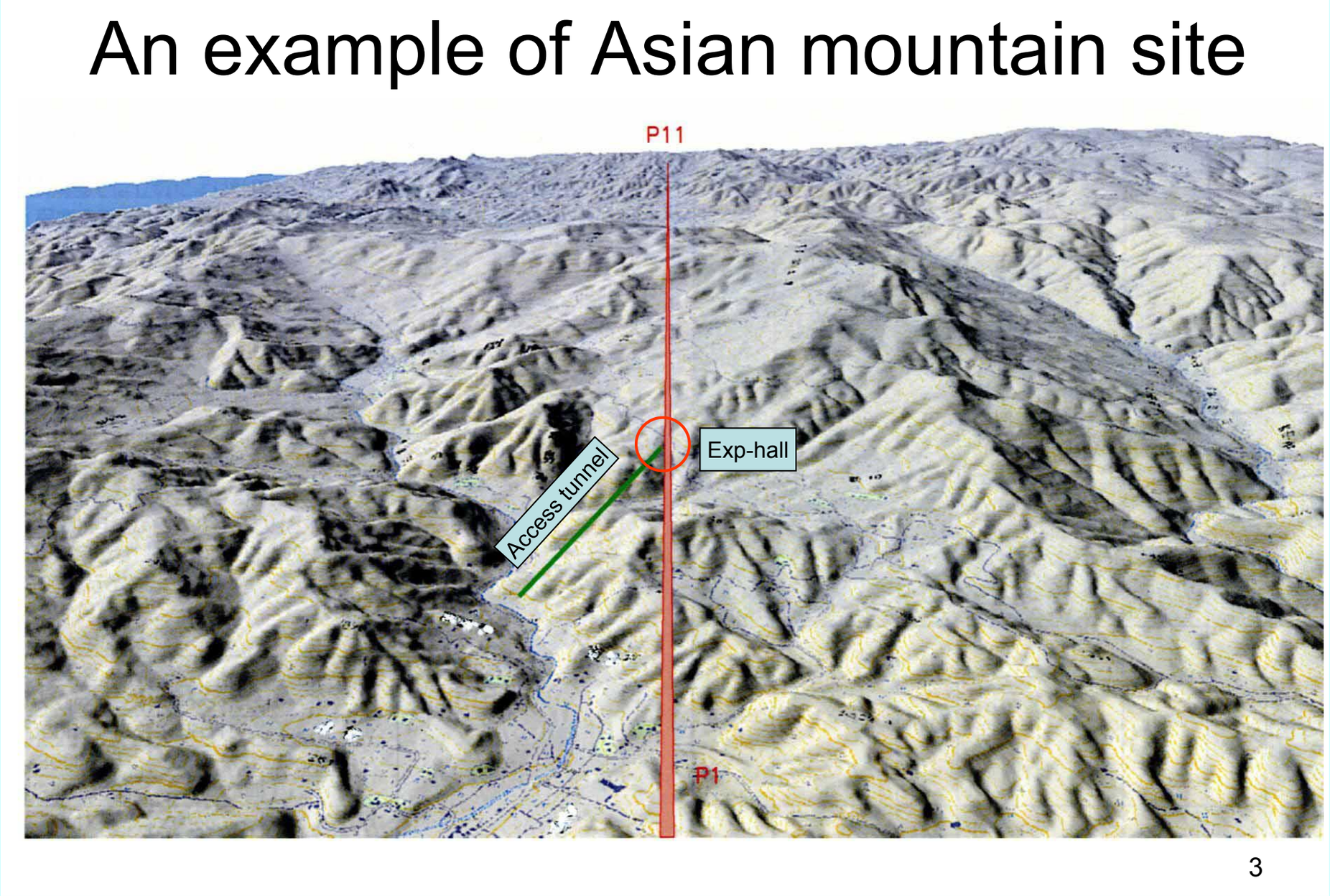

- ILC site could be quite different from „plain field“ assumptions
- No vertical access shafts (~100m) but horizontal access tunnels (~1km)
- CMS-type assembly of detector needs to be reviewed

Alternative Detector Assembly Studies (Y. Sugimoto)

A possible design of exp-hall

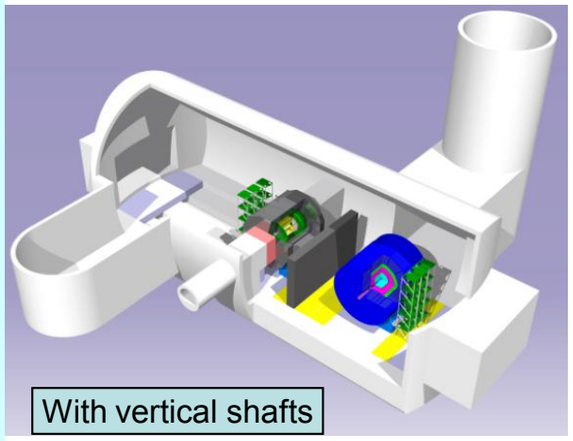

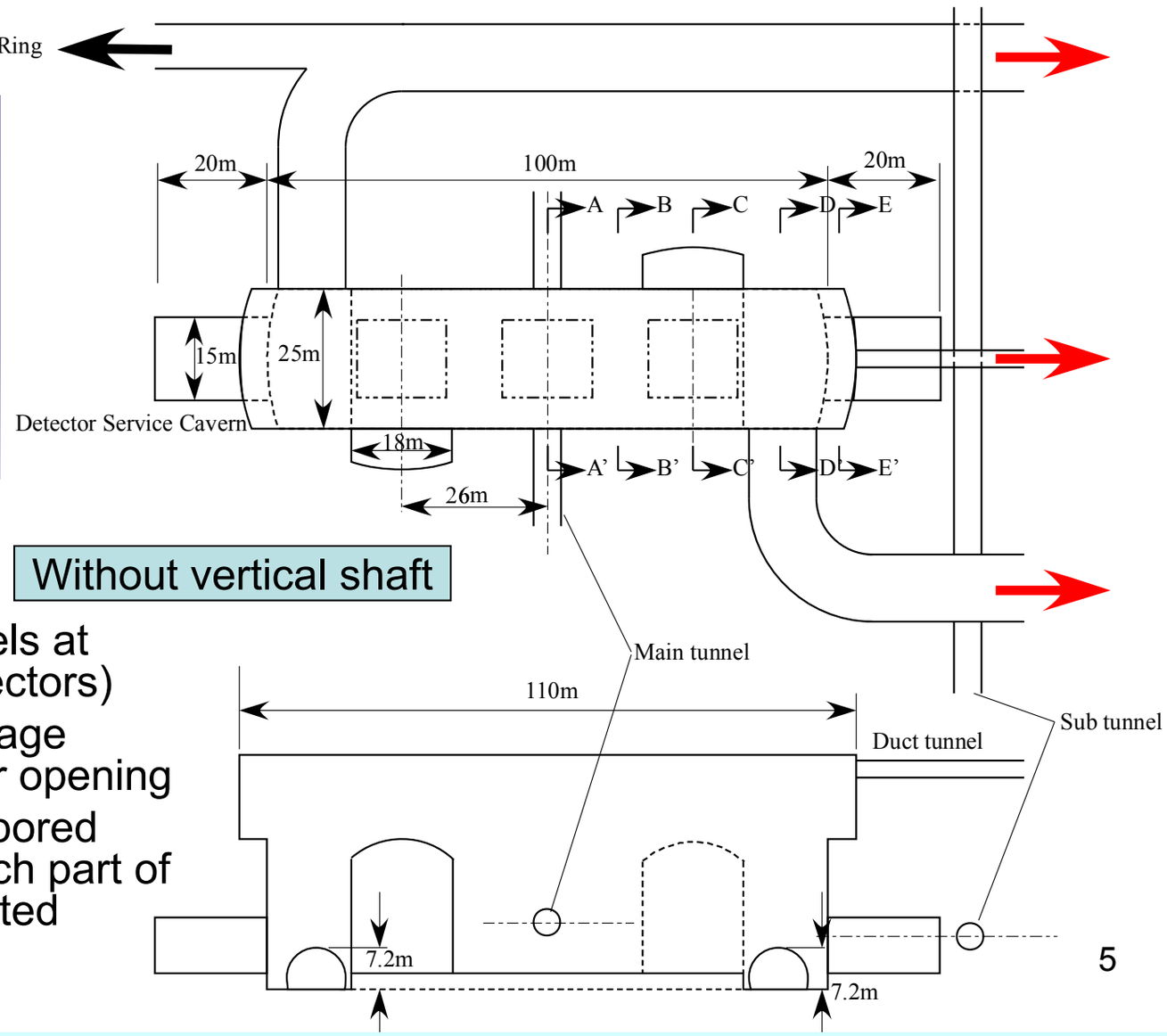

- Bottom access tunnels at both ends (for 2 detectors)
- Small alcoves at garage positions for detector opening
- Top (duct) tunnel is bored first, and then the arch part of the cavern is excavated

5

Alternative Detector Assembly Studies (Y. Sugimoto)

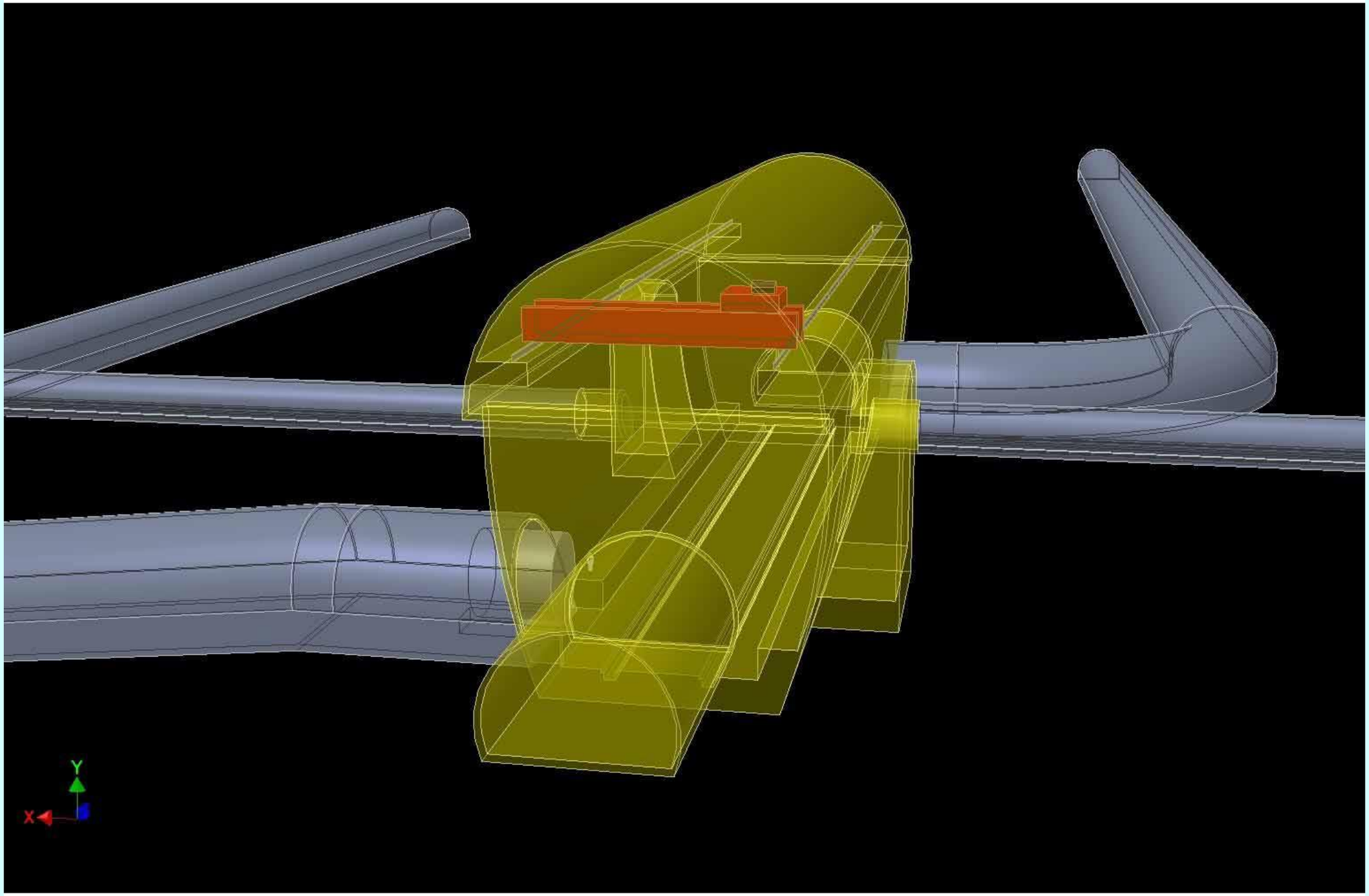

Alternative Detector Assembly Studies (Y. Sugimoto)

Space for assembly

- We need enough space to assemble the iron yoke and the solenoid in parallel
- Solenoid assembly procedure and installation method have to be studied
- Exp-hall should be equipped with two 200-ton cranes: usually one for each detector, and occasionally two cranes are used together to carry heavy (>200 ton) components

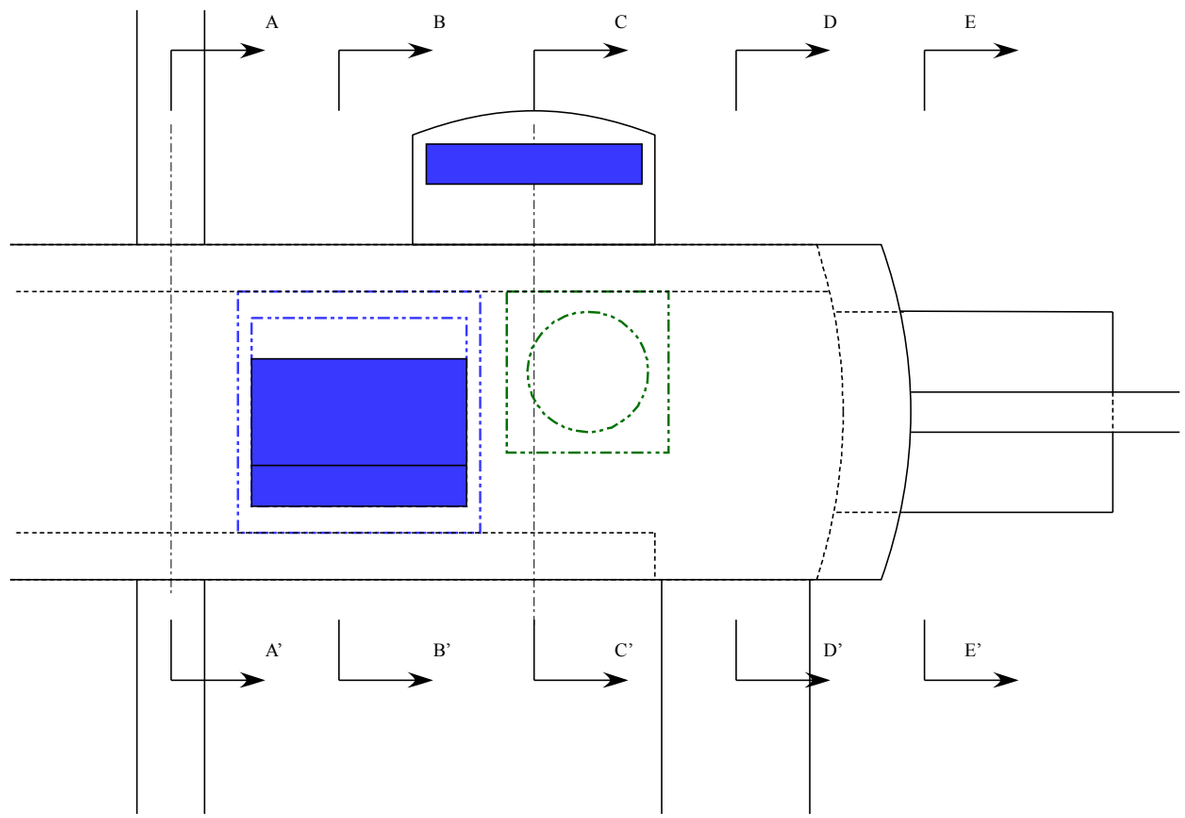

12

- Needs to be studied carefully

Detector assembly

- Assembly hall locates at the entrance of access tunnel where wide flat surface and wide roads exist
- Detector would be assembled to relatively small pieces (<100~200 ton) at the assembly hall, carried to the cavern through the access tunnel, and integrated to the large detector inside the cavern (Similar to “modified CMS style assembly” which was proposed by GLD group in 2006)
- Barrel iron structure would be divided in ϕ (and R) direction, rather than Z direction
- Solenoid coil would be wound on surface for 5 modules, and these modules are connected into one solenoid in the cavern
- Detailed study on the assembly method is necessary

6

Alternative Detector Assembly Studies (Y. Sugimoto)

New modified CMS style

ID	Name	Duration
1	Project approval	0d
2	**Beam lines construction**	**1955d**
3	Cavern/Tunnel	260w
4	Beamline harware install	105w
5	Start of beam commissioning	0d
6	BDS pre-commissioning	26w
7	BDS ready for detectors	0d
8	**Detector construction on surface**	**1850d**
9	Surface assembly hall	120w
10	Detector assembly on surface	250w
11	**Detector assembly in cavern**	**550d**
12	Yoke assembly	53w
13	Solenoid assembly/install/test	66w
14	Field mapping	4w
15	HCAL install/cabling/test	12w
16	ECAL install/cabling/test	12w
17	TPC install/cabling/test	8w
18	SIT/FTD/VTX install/cabling/test	8w
19	**Commissioning**	**235d**
20	Detector pre-commissioning	26w
21	Detector roll-in	4w
22	Detector check-out	4w
23	Final beam commissioning	13w
24	Ready for physics run	0d

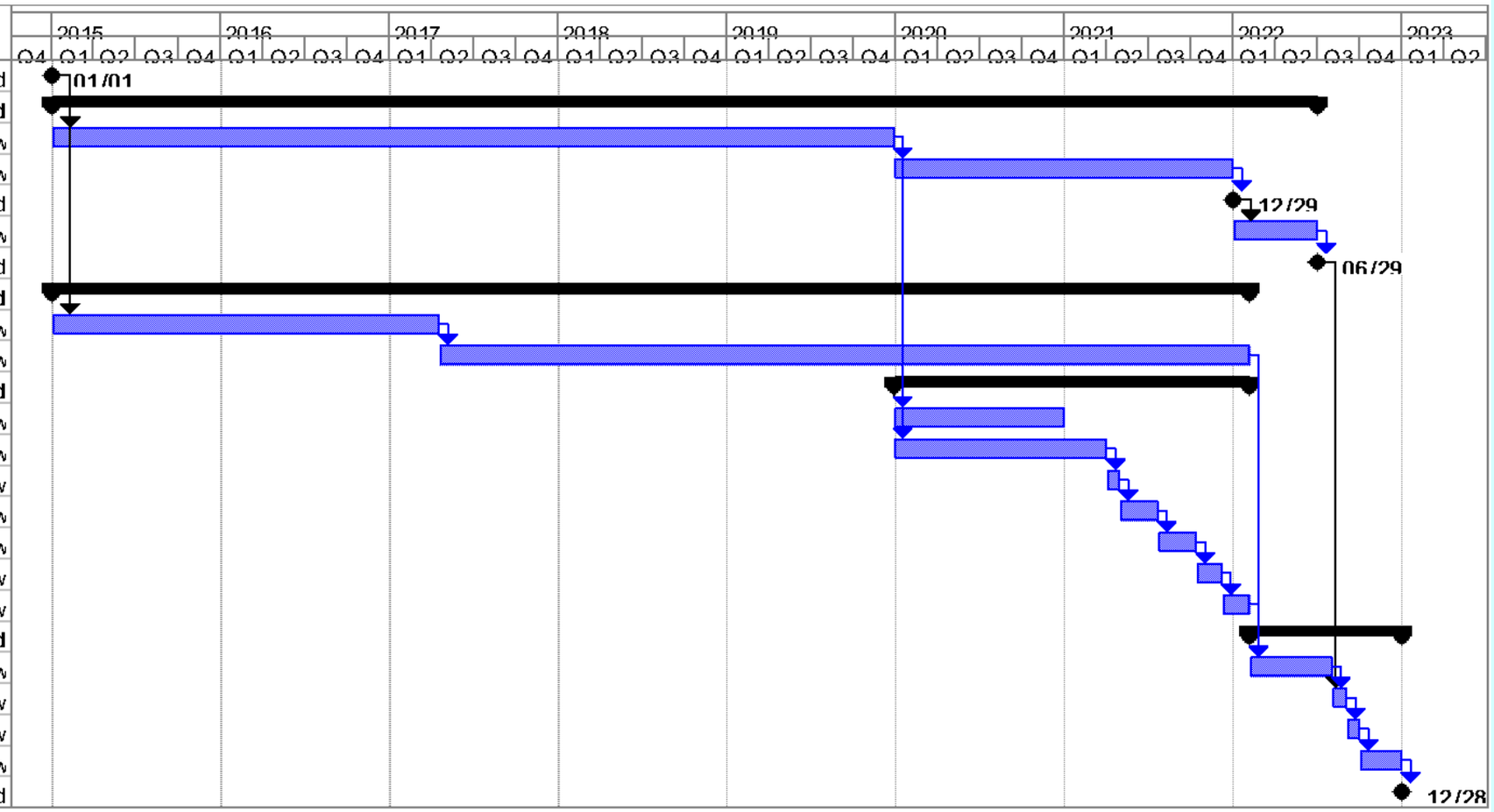

- Timing issues need to be studied in more detail

Detector Motion System Assessment (A. Hervé)

ETH Institute for Particle Physics

Conclusions-I

- The push-pull operation to quickly exchange two detectors on IP is an important feature of any LC.
- To be efficient this operation has to be carried out in less than three or four days including precise realignment on beam.
- This is a very challenging and difficult task as this system cannot fail even if local conditions worsen with time.
- The risk of finishing after some years with a non-functioning system must be avoided at all cost.

Alain Hervé, CLIC08 Workshop, 16 October 2008 28

Detector Motion System Assessment (A. Hervé)

ETH Institute for Particle Physics

Conclusions-II

- SiD and ILD have chosen two different solutions that today look incompatible.
- The only solution that seems to satisfy all needs is to have one platform for each detector.
- Clearly the choice of a platform must not jeopardize the QD0 stability in SiD, that support them from the endcaps.
- The CMS plug is a good example of a platform and its vibration performance could be used to benchmark the simulation programs developed at SLAC.

Alain Hervé, CLIC08 Workshop, 16 October 2008 29

Detector Motion System Assessment (A. Hervé)

ETH Institute for Particle Physics

Both detectors on a platform

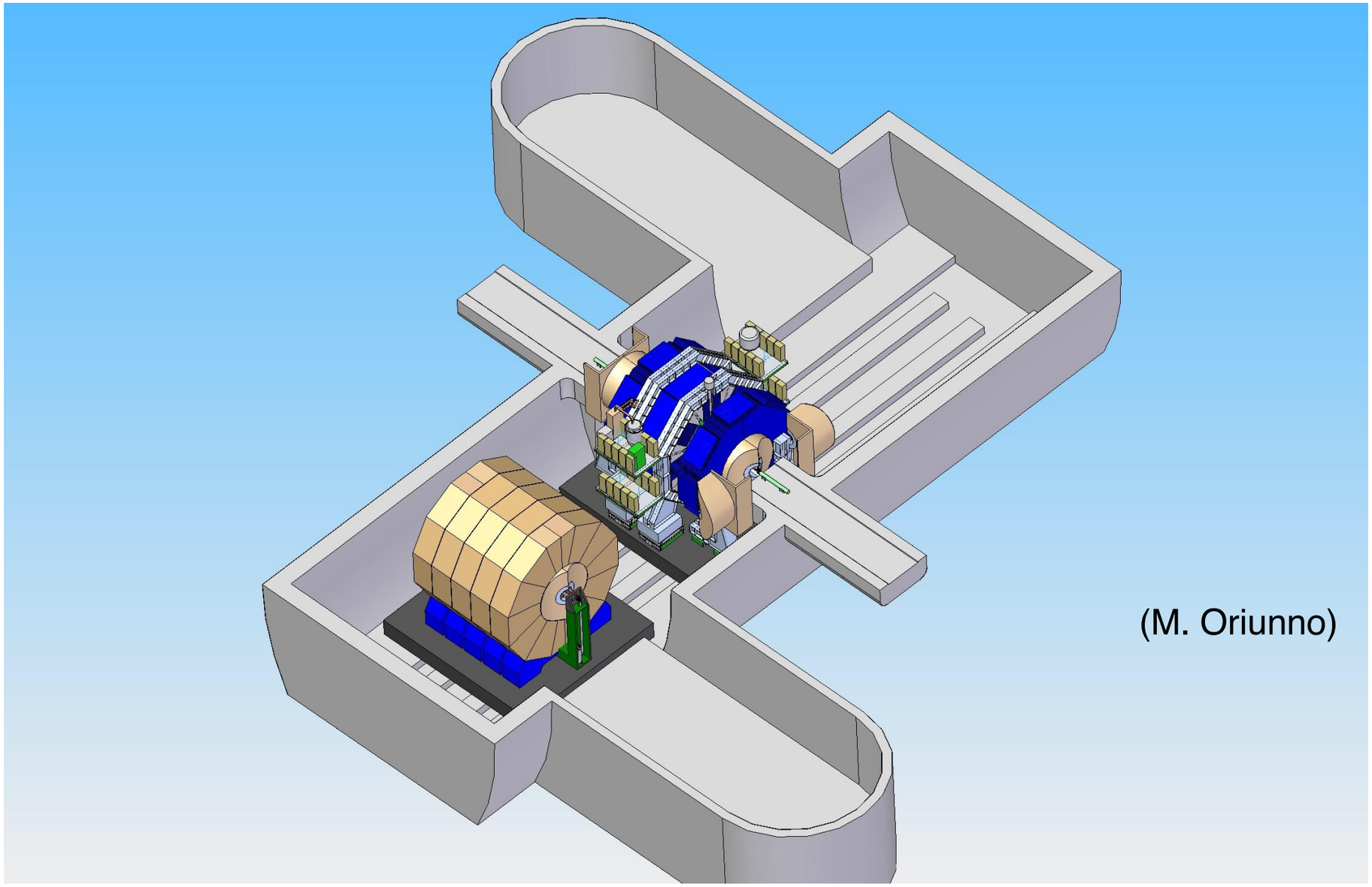

Alain Hervé, CLIC08 Workshop, 16 October 2008 5

- ILD prefered solution

Detector Motion System Assessment (A. Hervé)

ETH Institute for Particle Physics

No detector on a platform
(*it looks at first like the simplest solution*)

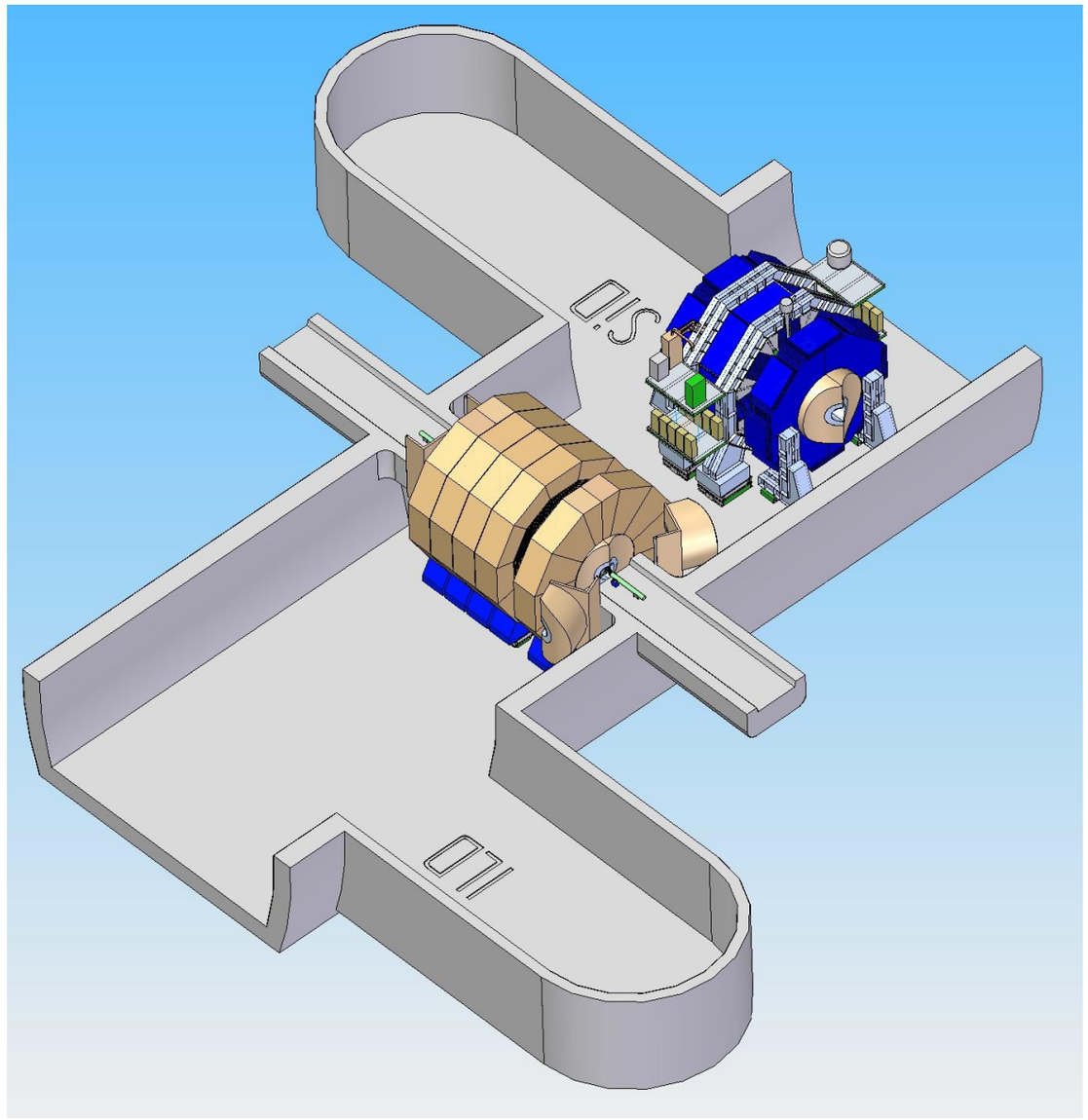

(M. Oriunno)

Alain Hervé, CLIC08 Workshop, 16 October 2008 6

- SiD prefered solution

Detector Motion System Assessment (A. Hervé)

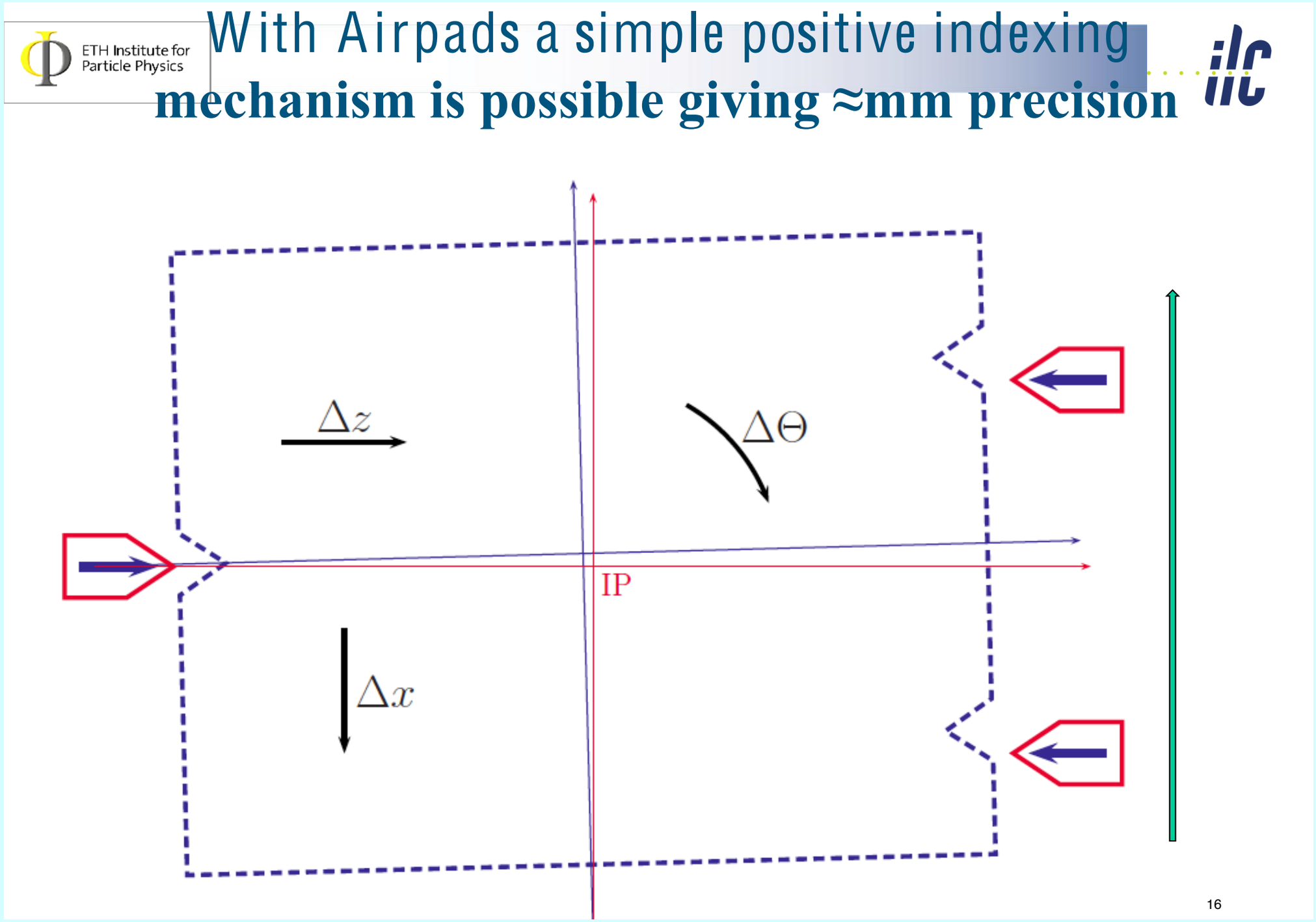

- Final precision: +-1 mm and +- 0.1 mrad

Detector Motion System Assessment (A. Hervé)

ETH Institute for Particle Physics

The load distribution can be optimized

Weight distribution of a typical experiment

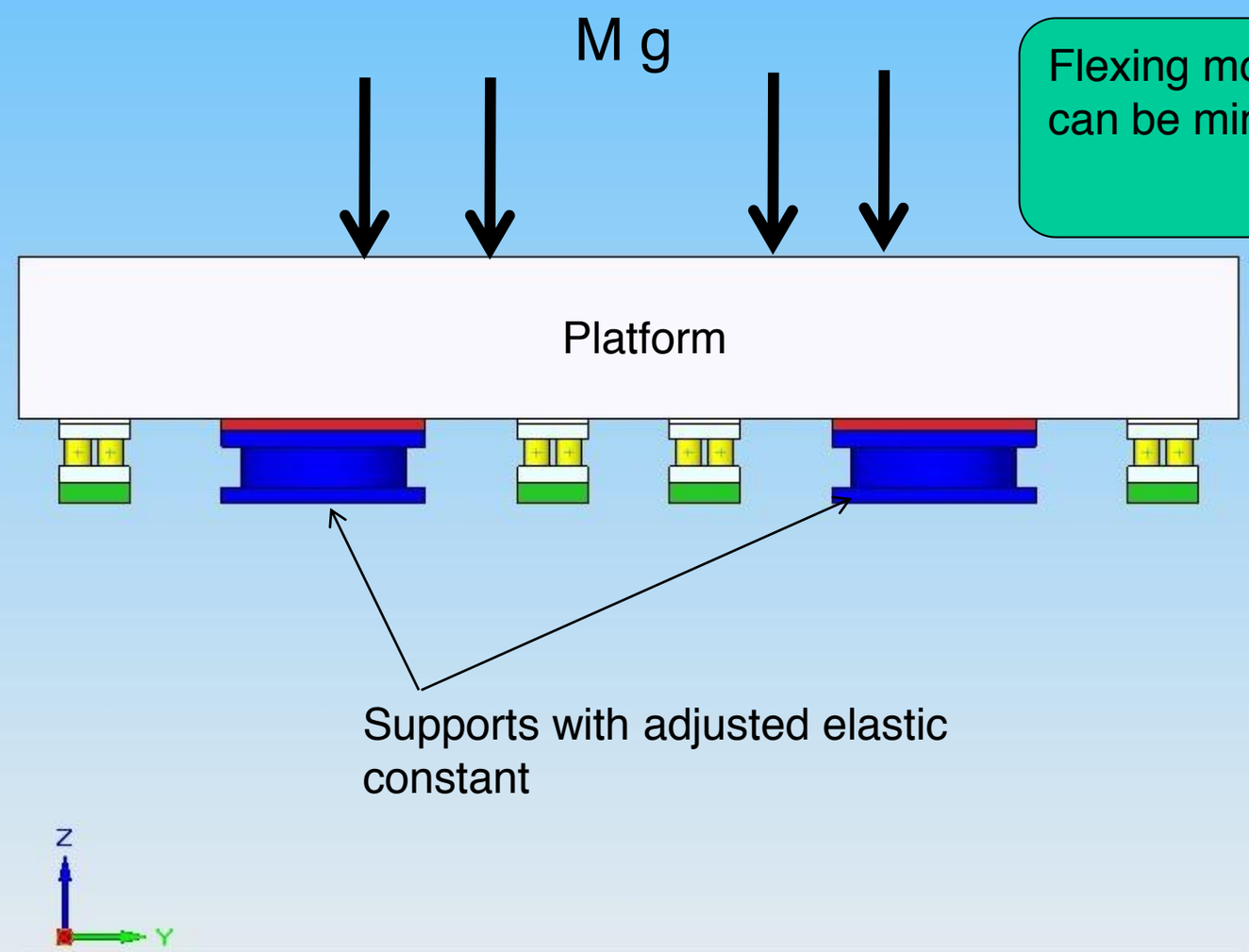

Flexing moments can be minimized!

Alain Hervé,

21

Detector Motion System Assessment (A. Hervé)

ETH Institute for Particle Physics

Vibration consideration at CMS

Vibrations on top of CMS central barrel YB0 with 'Quiet experimental area'

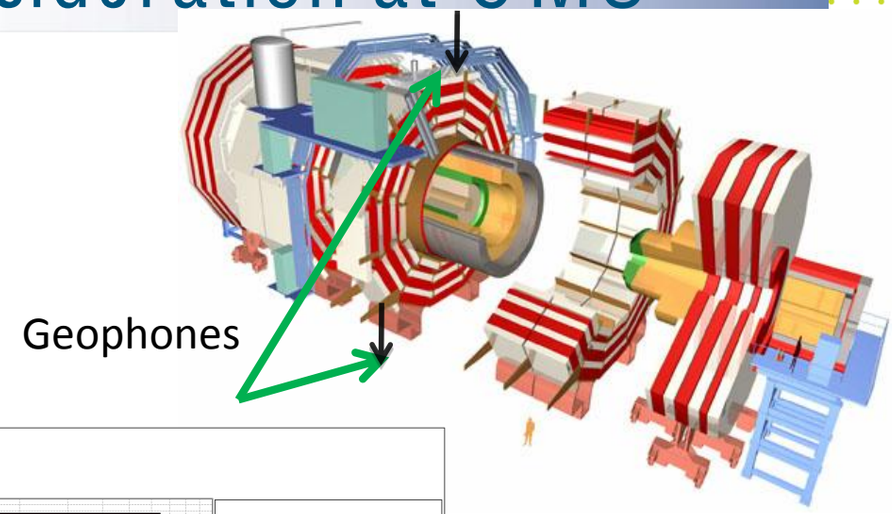

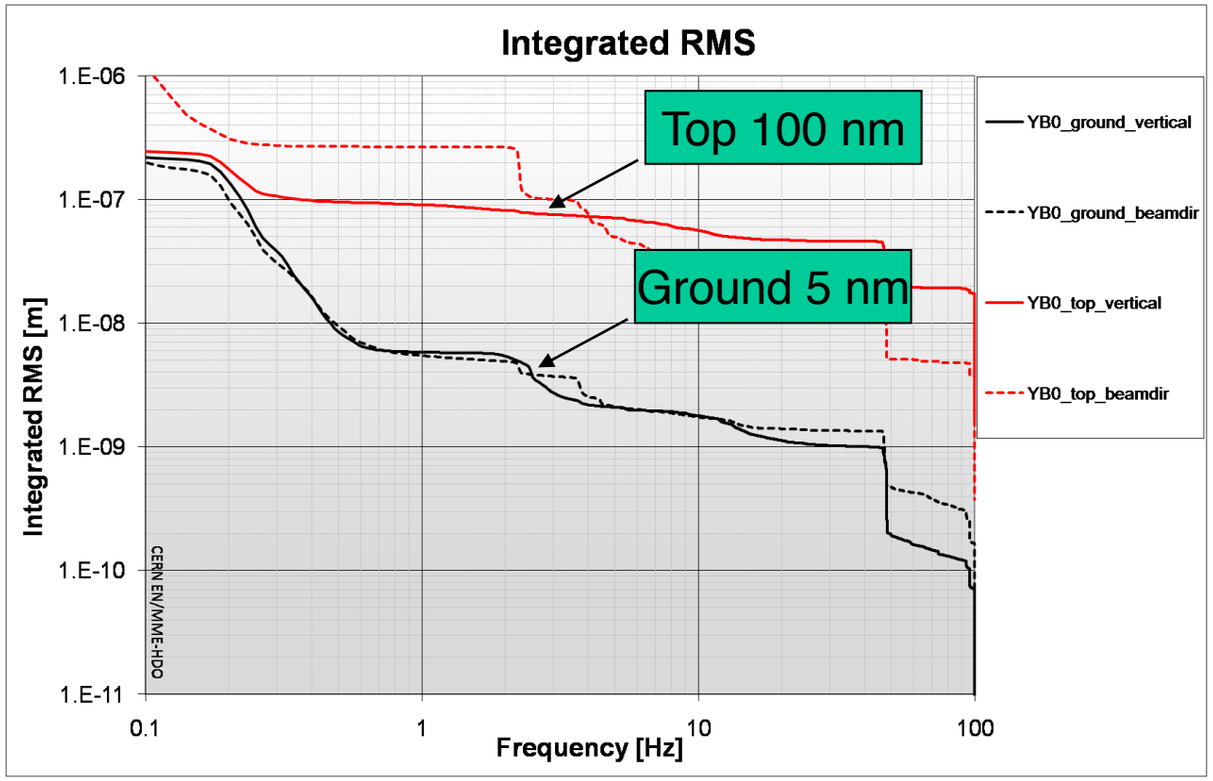

Measurements at KEK on BELLE (Hiroshi Yamaoka) have also shown a degradation of performances when moving up along the yoke.

Alain Hervé, CLIC08 Workshop, 16 October 2008 19

- Vibration limit: 50nm at beam line
- What would a platform change?

Vibration Issues (M. Oriunno)

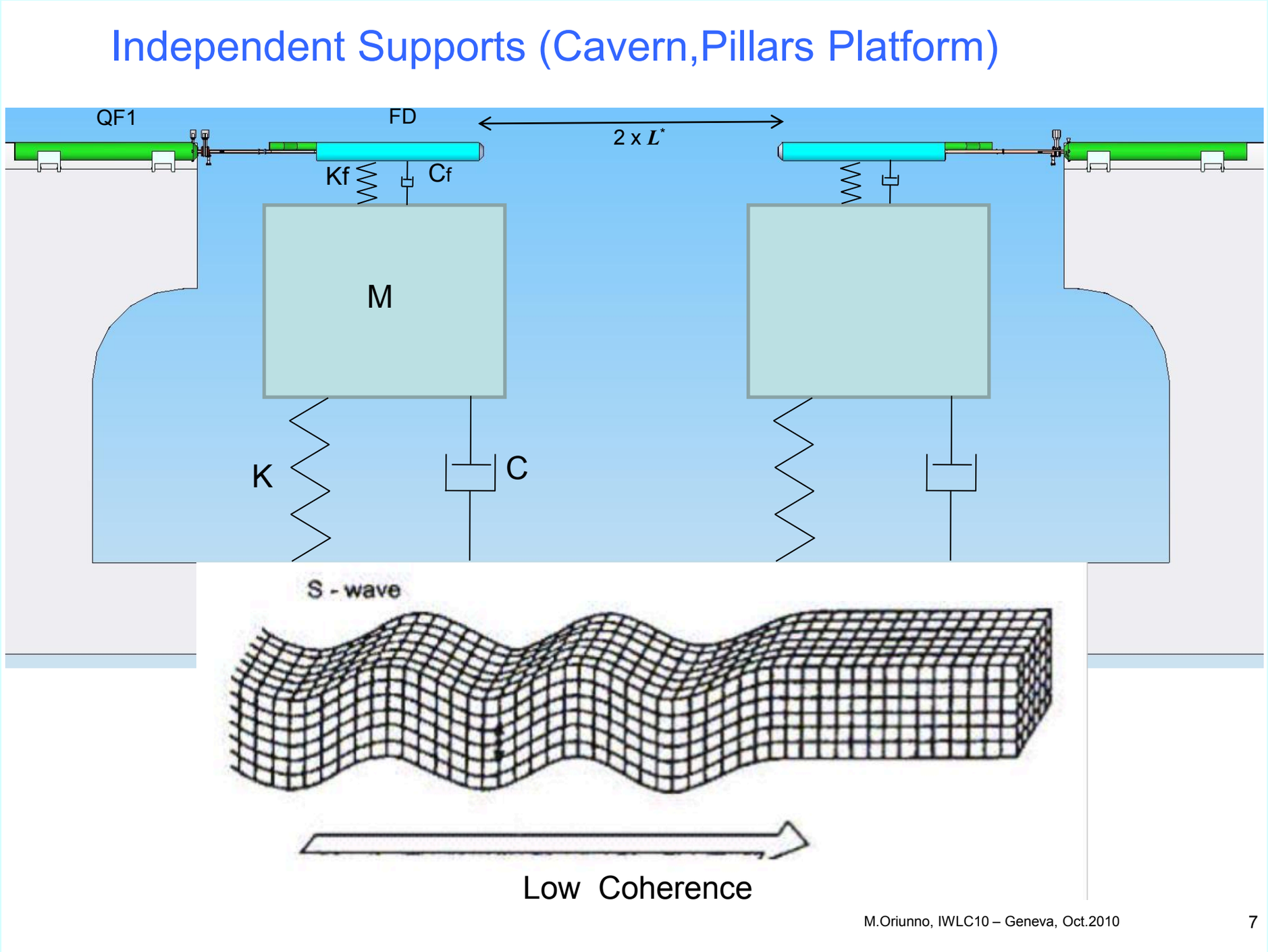

- ILD situation

Vibration Issues (M. Oriunno)

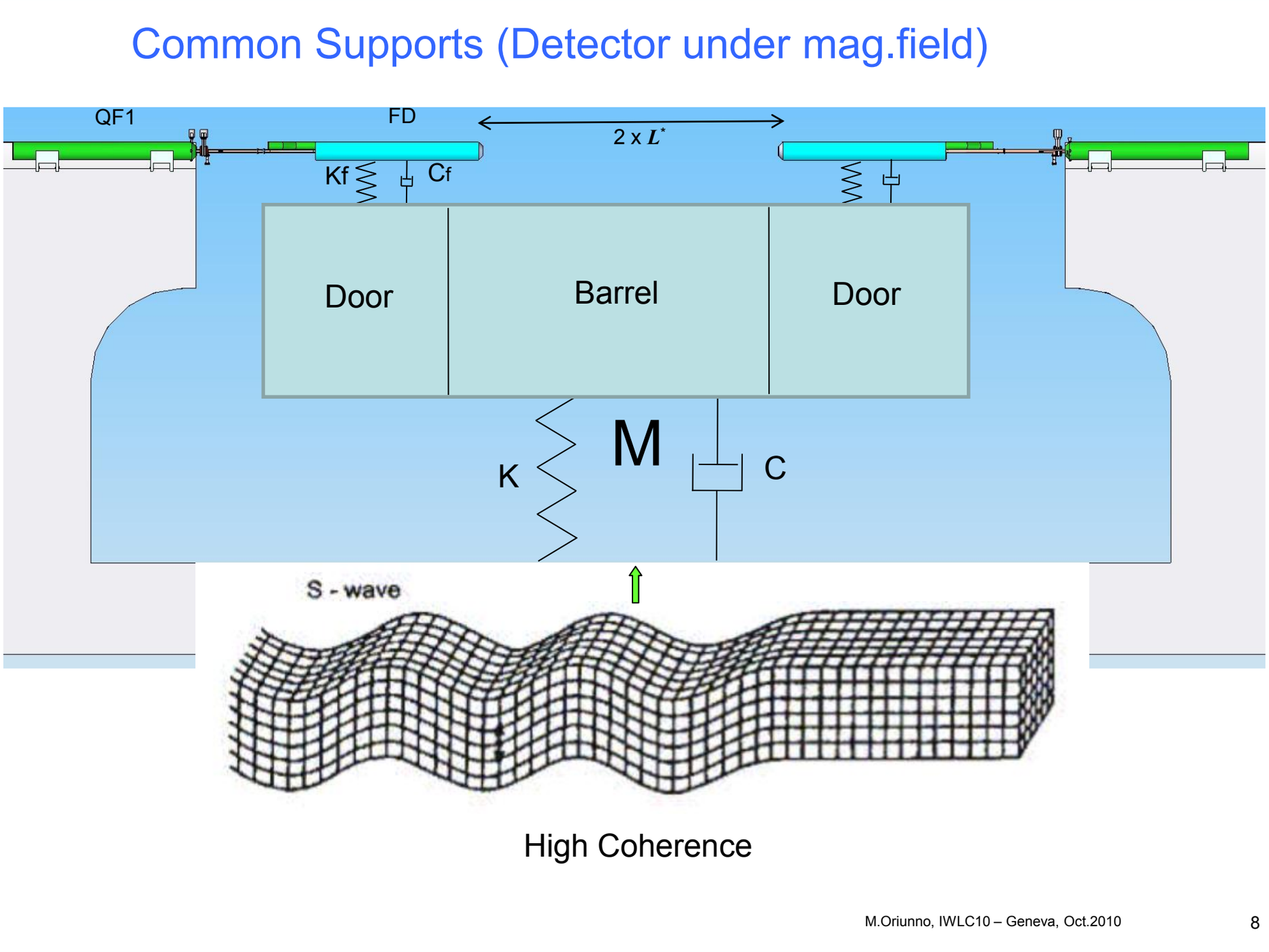

- SiD situation
- SiD claims that this should be better w.r.t vibration stability

Vibration Issues (A. Hervé)

ETH Institute for Particle Physics

Steel reinforcement of CMS Plug ⇒ Models need benchmarking

to evaluate damping and Young's modulus

24

Vibration Issues (A. Hervé)

ETH Institute for Particle Physics

CMS Plug finished

Vibration Issues (M. Oriunno)

New Vibrations Measurements done at CERN last week, Analysis of the data in progress (CERN-EN Department)

- Absolute PSD spectra on various locations on the top of the platform, P1…P7, with the reference points PREF1, PREF2
- Relative PSD spectra, P12, …. P17 (Coherence) (can be calculated from the previous measurements)
- Transfer functions on various locations on the top of the platform P1-2-3-4-5 with respect to the reference points
- Transfer Functions P1…P7 with reference to the ground vibration

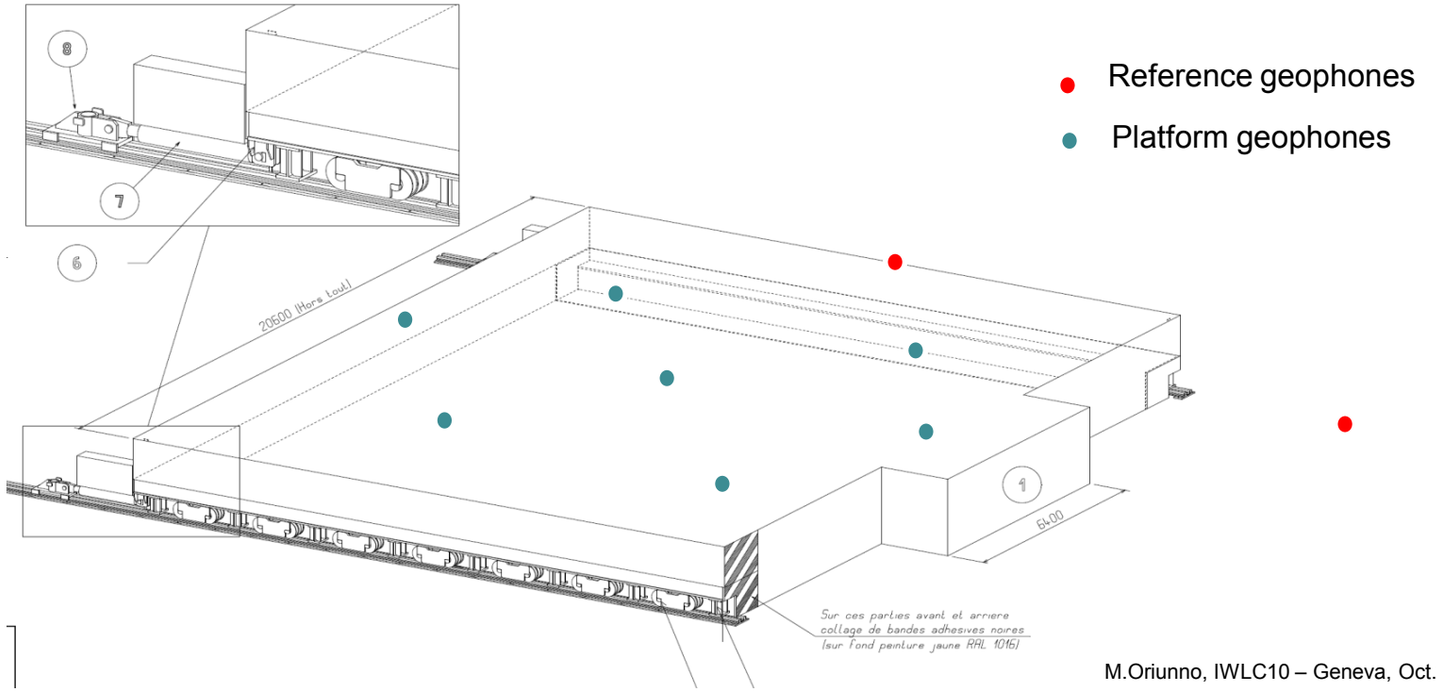

M.Oriunno, IWLC10 – Geneva, Oct.2010 15

- Measurements on CMS platform done
- Benchmarking the simulation codes

Vibration Measurements and Analysis (H. Yamaoka)

Introduction

Vibration measurements have been done at KEKB/Belle.

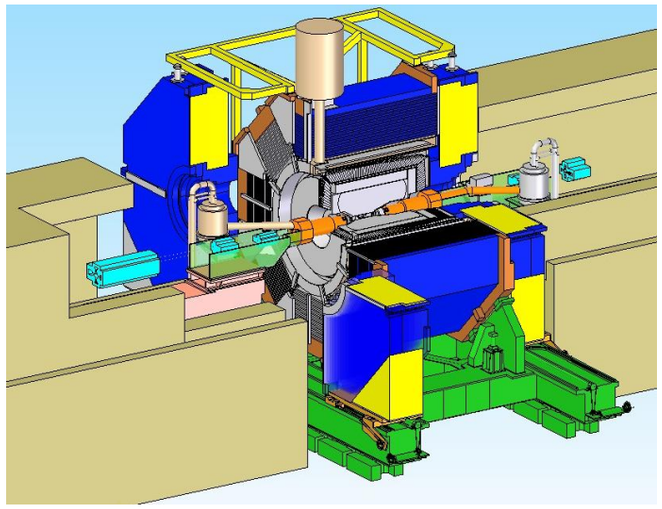

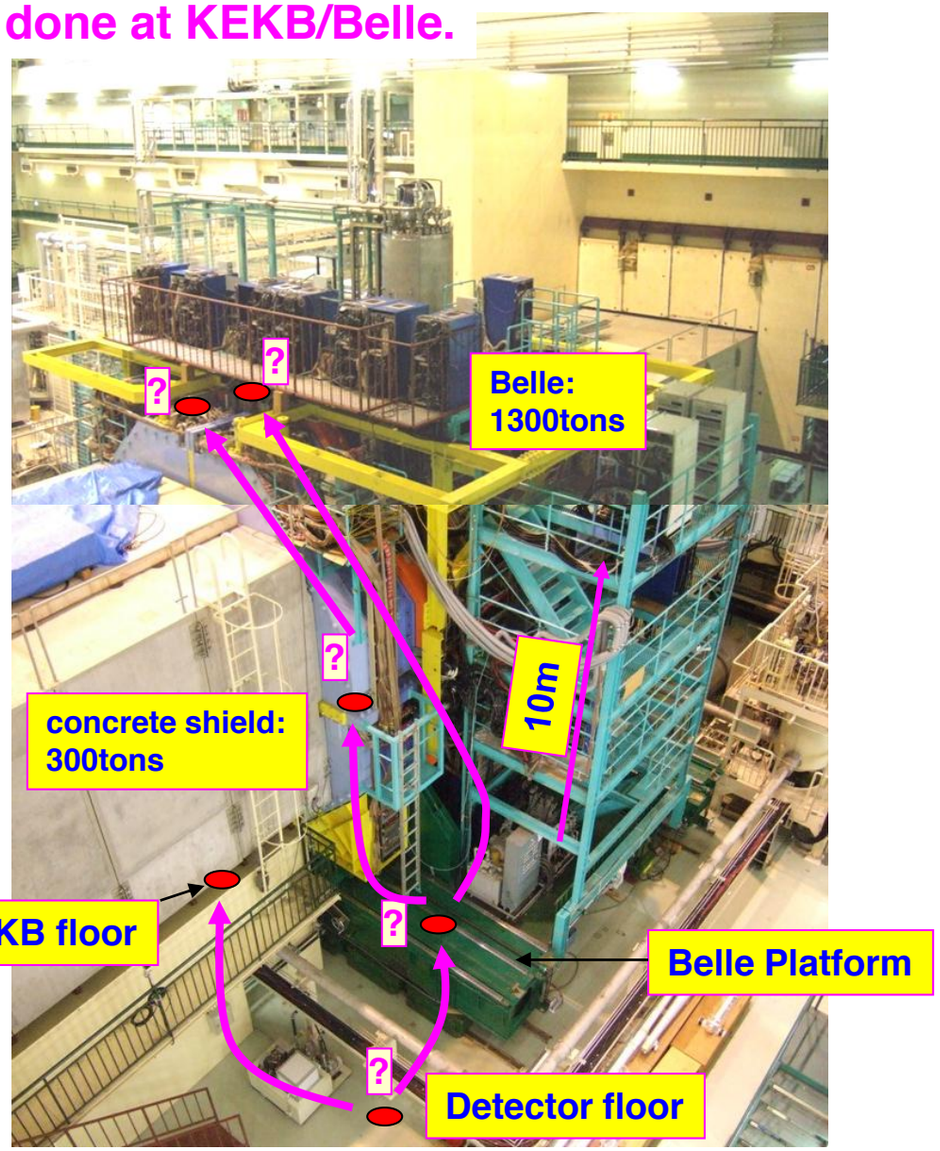

Measure vibrations at KEKB

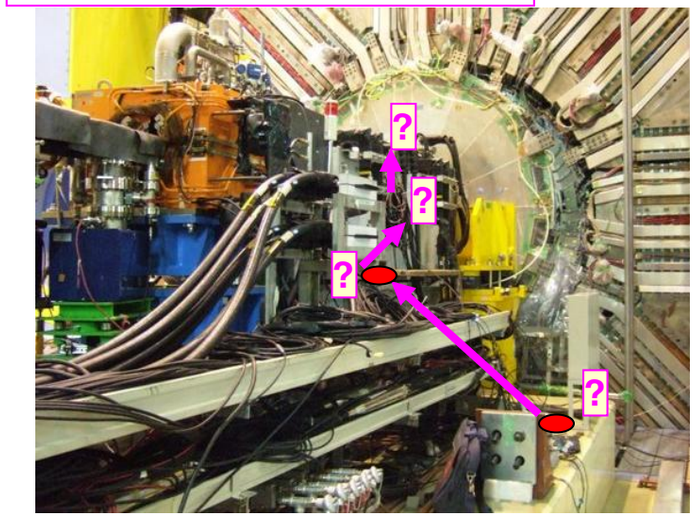

- **Is it possible to evaluate these vibrations by FEM?**
- **Are those calculations consistent with measurements?**

2

Vibration Measurements and Analysis (H. Yamaoka)

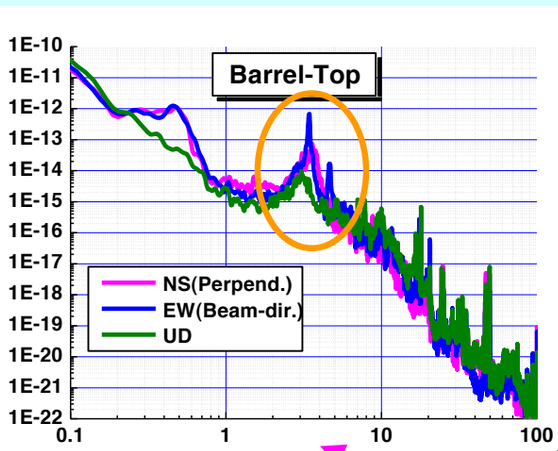

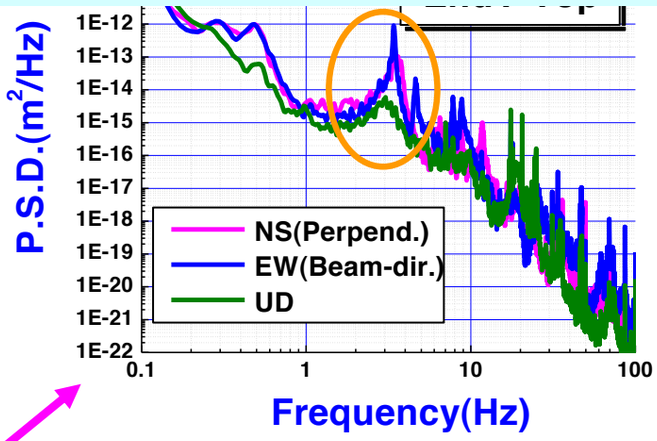

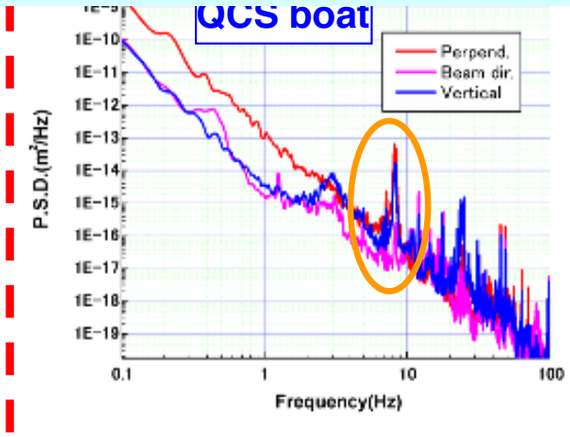

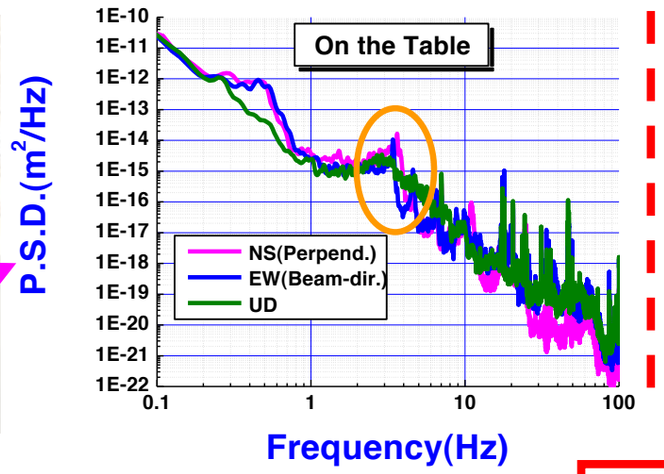

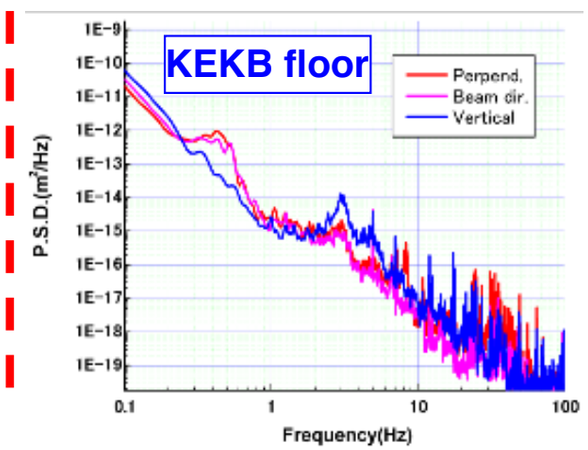

Integrated amplitude(nm)						
	>1Hz			>10Hz		
	Perpend	Beam	Vertical	Perpend	Beam	Vertical
Barrel-Top	196	301	93	18	12	9
EY-Top	248	354	80	25	17	20
EY-Mid.	204	254	121	14	27	19
Belle platform	105	69	71	13	11	13
Detector floor	50	46	67	4	3	9
KEKB floor	55	45	68	10	5	9
Mag.-table	90	50	76	12	16	19
QCS-boat	250	60	118	15	21	30
QC1RE	241	77	112	52	50	46

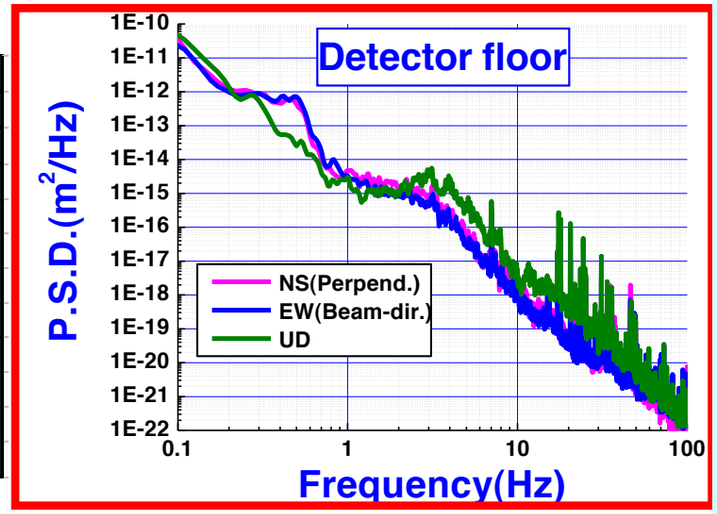

Vibration Measurements and Analysis (H. Yamaoka)

The belle platform

FEM model

Steel
E=211GPa
Density=7.85
Damping= 0.5%

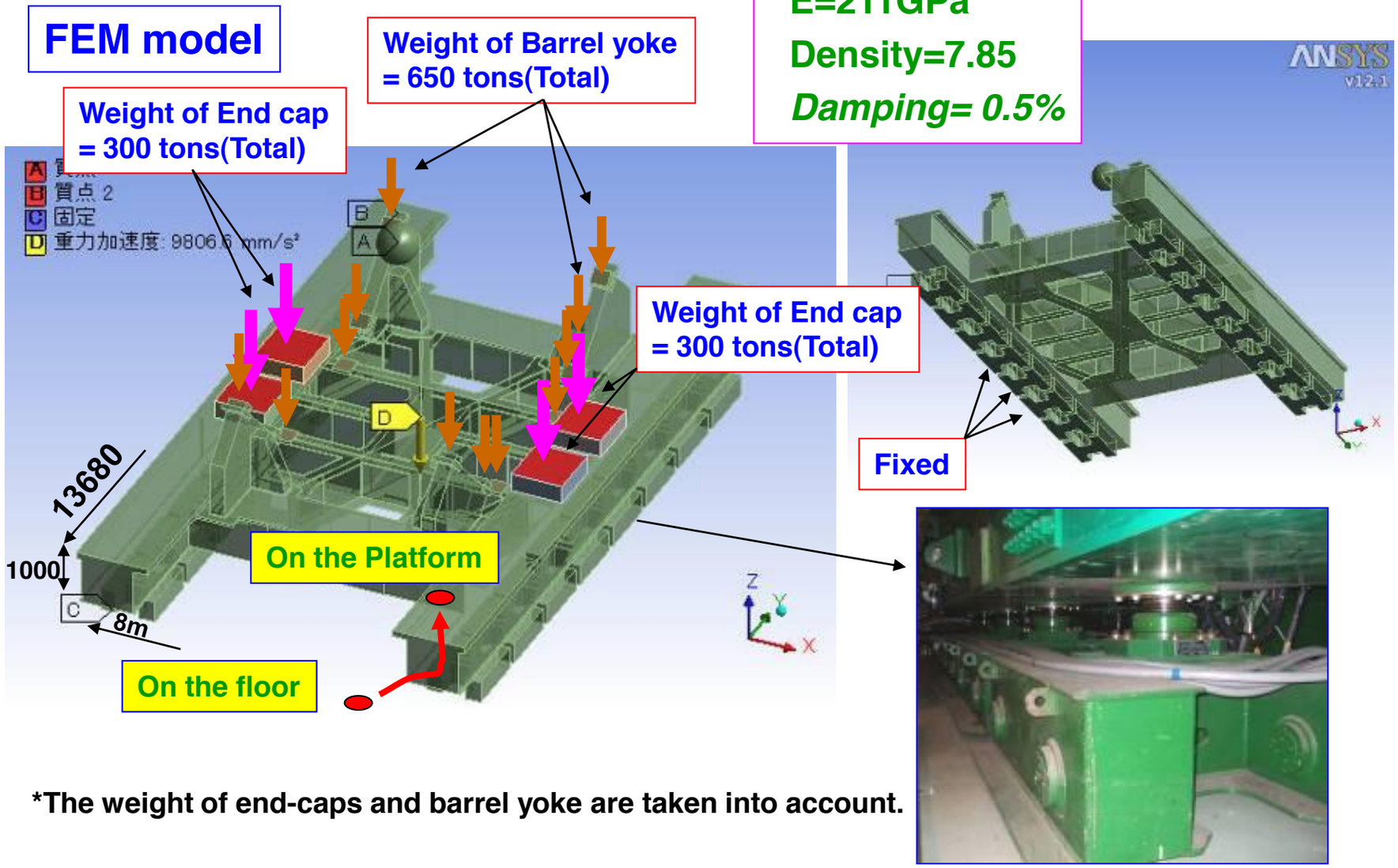

*The weight of end-caps and barrel yoke are taken into account.

The platform is assembled with square pipes reinforced by ribs.

15

Vibration Measurements and Analysis (H. Yamaoka)

Deformation

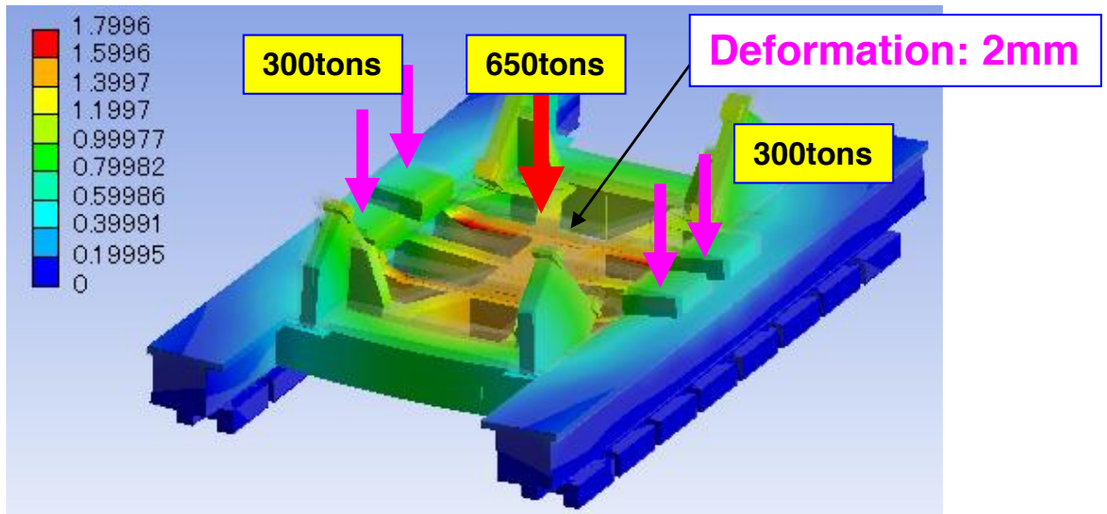

Natural frequencies

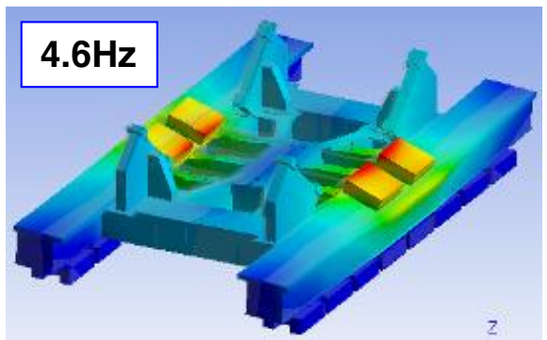

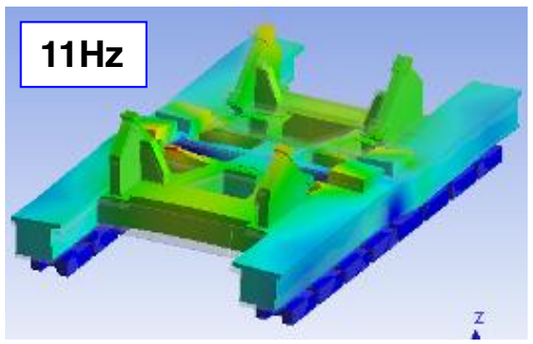

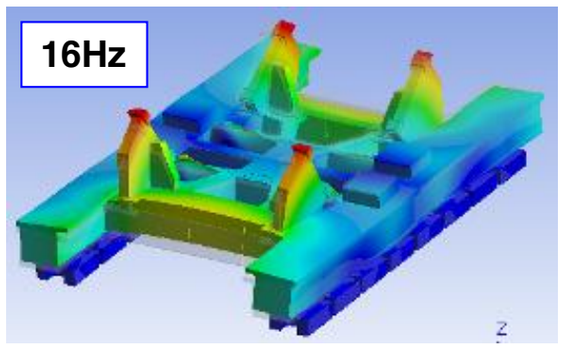

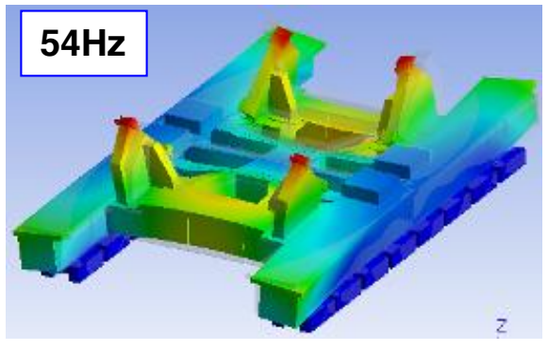

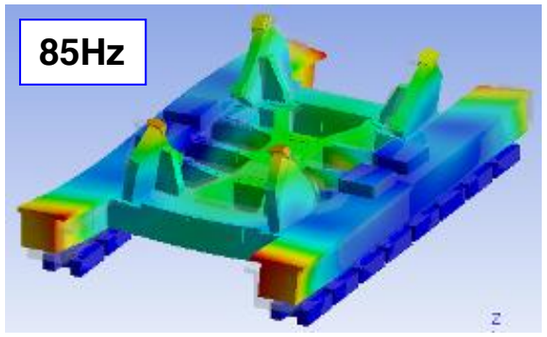

***The weight of end-caps and barrel yoke are taken into account.**

16

Vibration Measurements and Analysis (H. Yamaoka)

Vibrations(Amplitude)

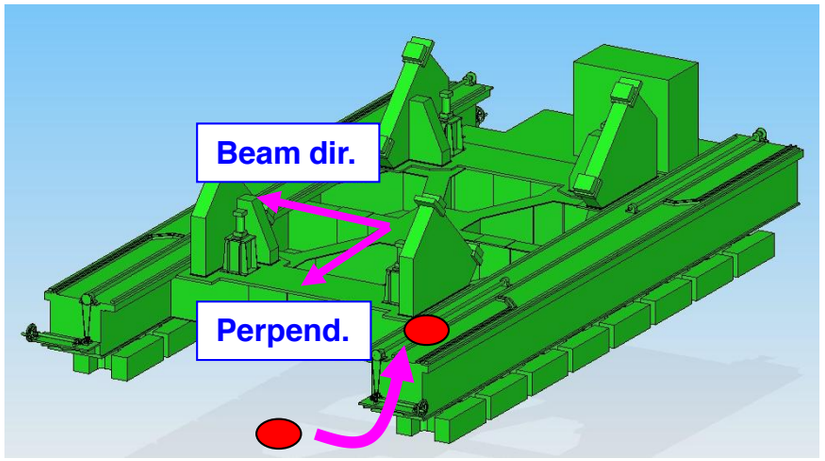

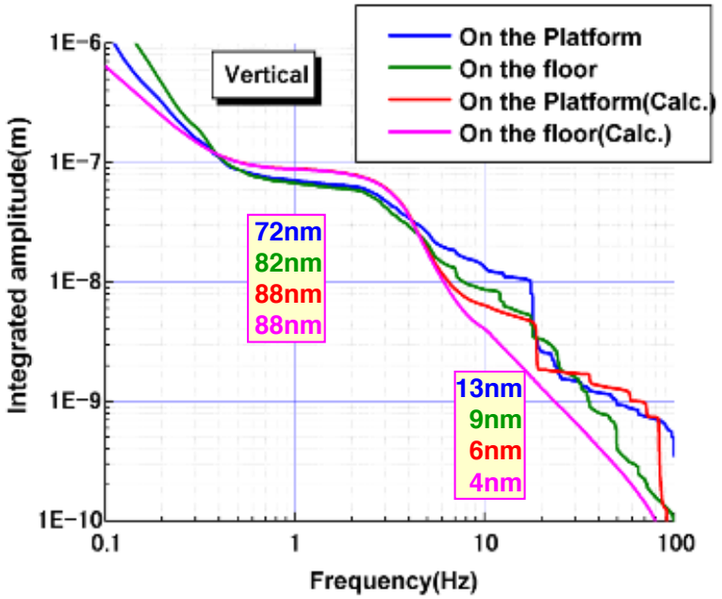

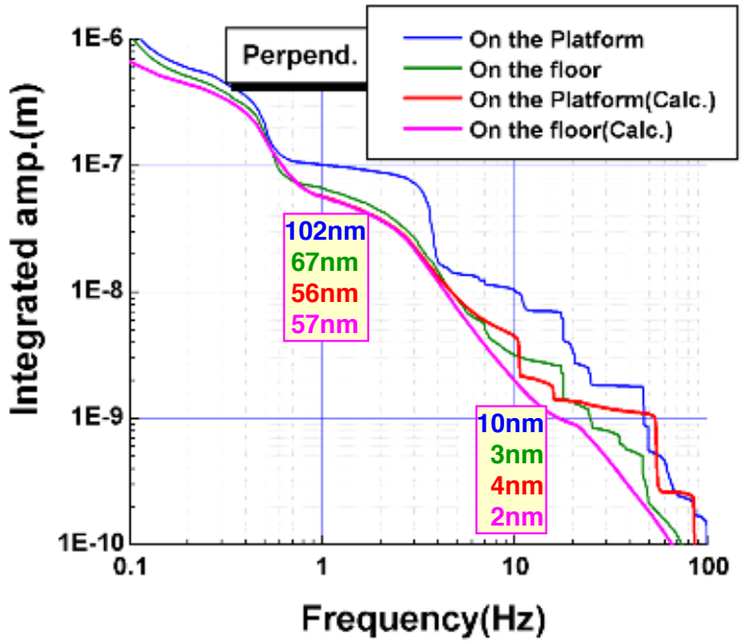

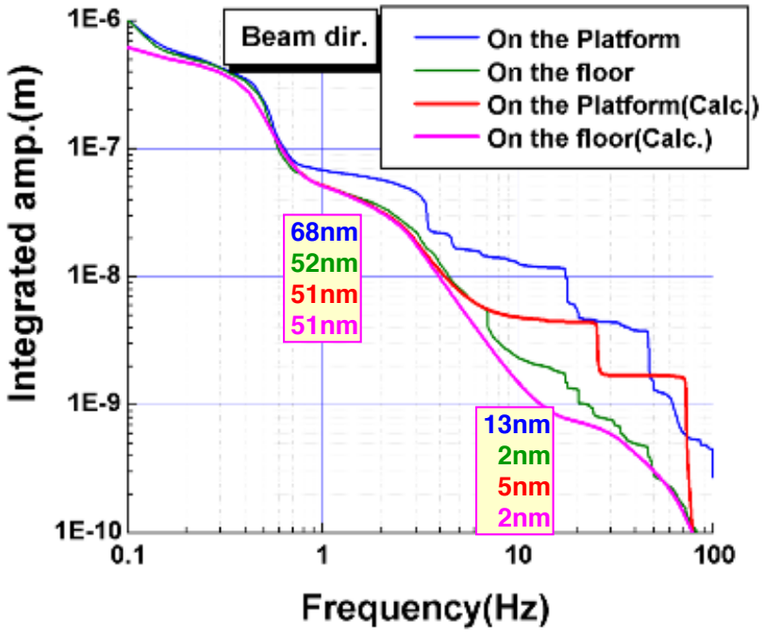

18

- Comparison of measurements and data is reasonably well

Detector Motion System Decision

A decision needs to be taken soon

- Any concept has some work to do if the decision would reject its currently preferred system:
  - ILD would have to be re-designed largely if there is no platform
  - SiD would need to adapt to a platform
- Current DBD timescale requires a decision before the mid of 2011
- We will try to come to a decision at the next ILC workshop in Oregon (03/2011)

- BTW: Who decides?

- My opinion: decision by CLIC to go for a platform based push-pull system has broken the symmetry between ILD and SiD
- Nevertheless: we want to have a fact- and not opinion-driven decision
- We still need to show that we can stabilise the QD0 magnets to the required precision on a platform
  - Vibration analysis and measurements are key ingredients