ILD integration studies :

Gaps & dead materials
Inputs for simulation
Average values for reconstruction

C.Clerc **LLR, Ecole polytechnique, Palaiseau**
P.Mora de Freitas
G.Musat

Gap Barrel-Endcap :

Services of the Barrel ; 16 ways-out (170 cm²each)

- TPC 80 cm²
- AHCAL 800 cm²
- ECAL 352 cm² (cooling case (2))
- SET

But Also

In case AHCAL electronic in the gap (10cm long)

Services of the Endcaps in 16 ways out

- Ecal endcaps
- ETD

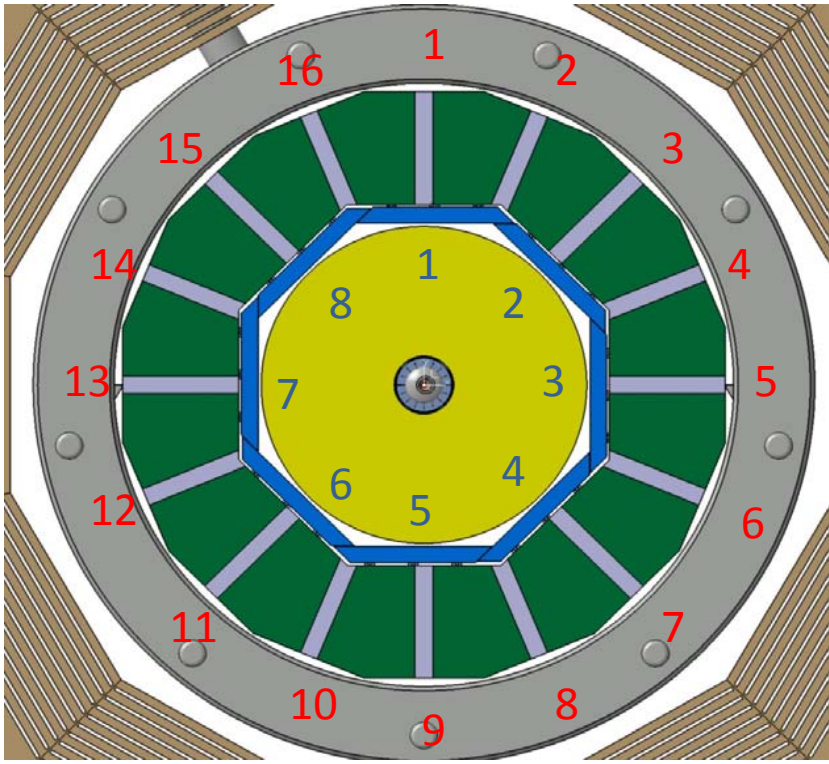

COOLING ECAL Barrel, 3 possibilities, leak less system with heat pipes .
(*J.Giraud & al, LPSC)*

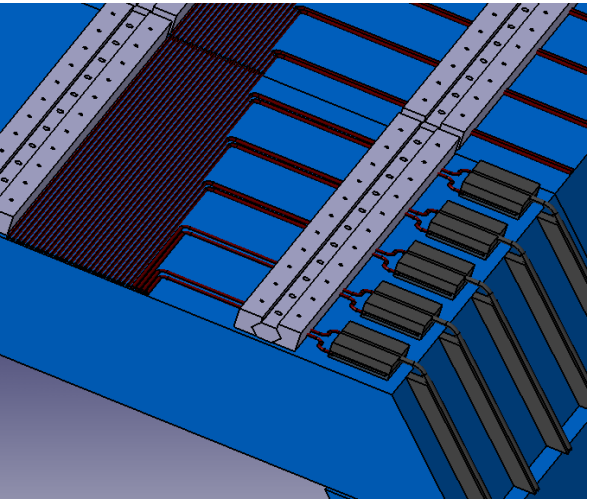

(1)
Small Cu pipes distributing each columns

400 tubes full barrel

15 W max

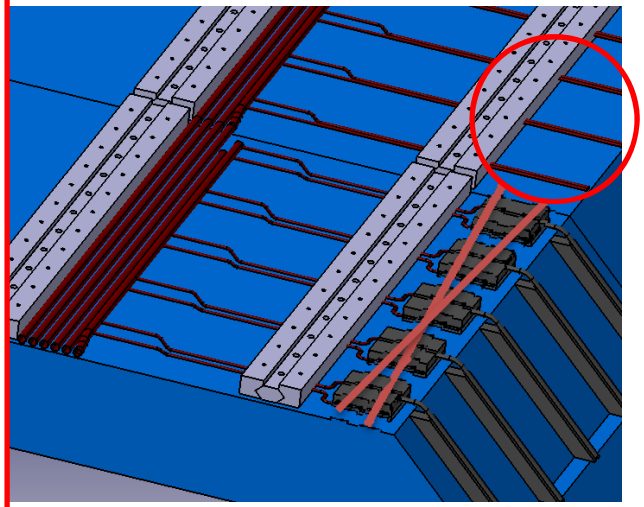

(2)
2 bigger pipes per modules

80 tubes full barrel

150 W

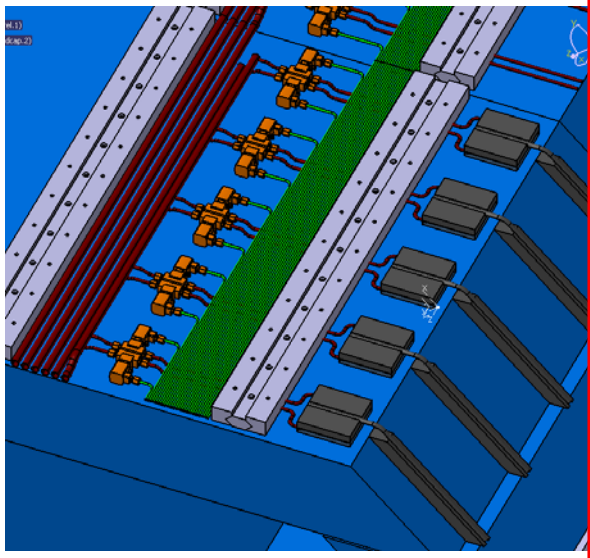

(3)
Same as (2) + pneumatic valves

80 (water) + 400 (air)

150 W

COOLING ECAL Barrel (*J.Giraud & al, LPSC)*

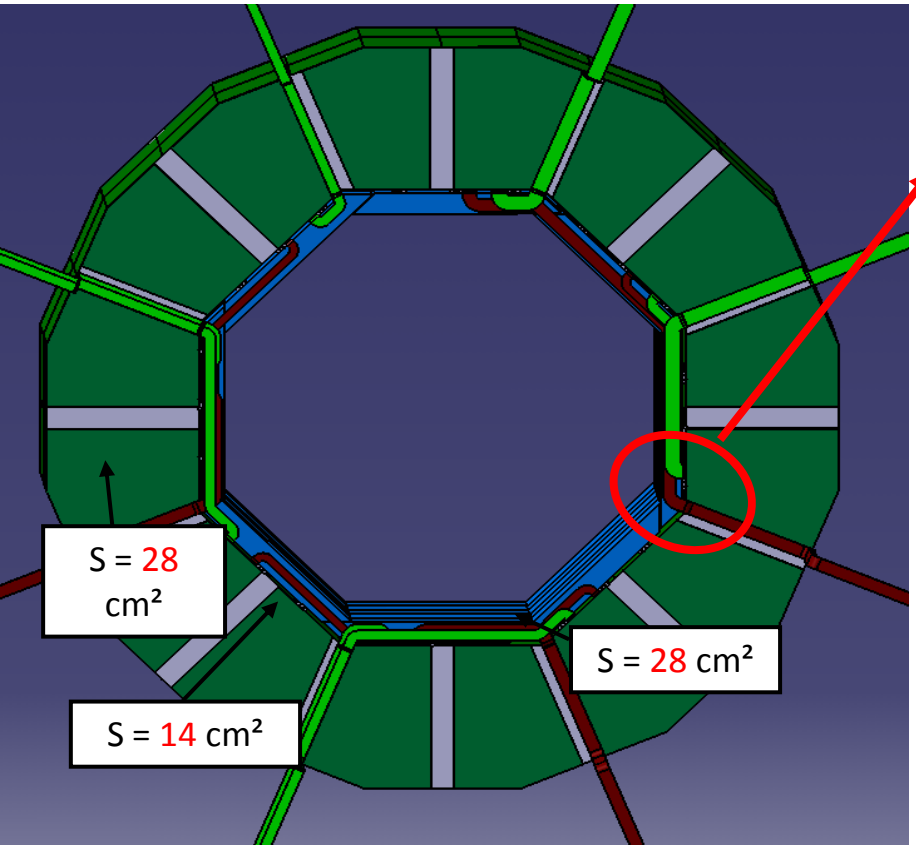

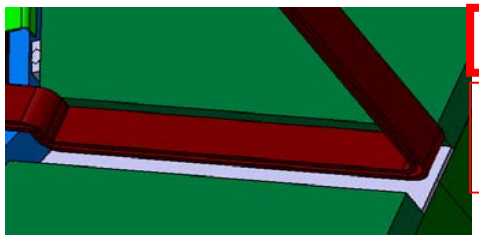

Smax = 42 cm²

3 overlapped lines of 6 pipes ∅15 mm

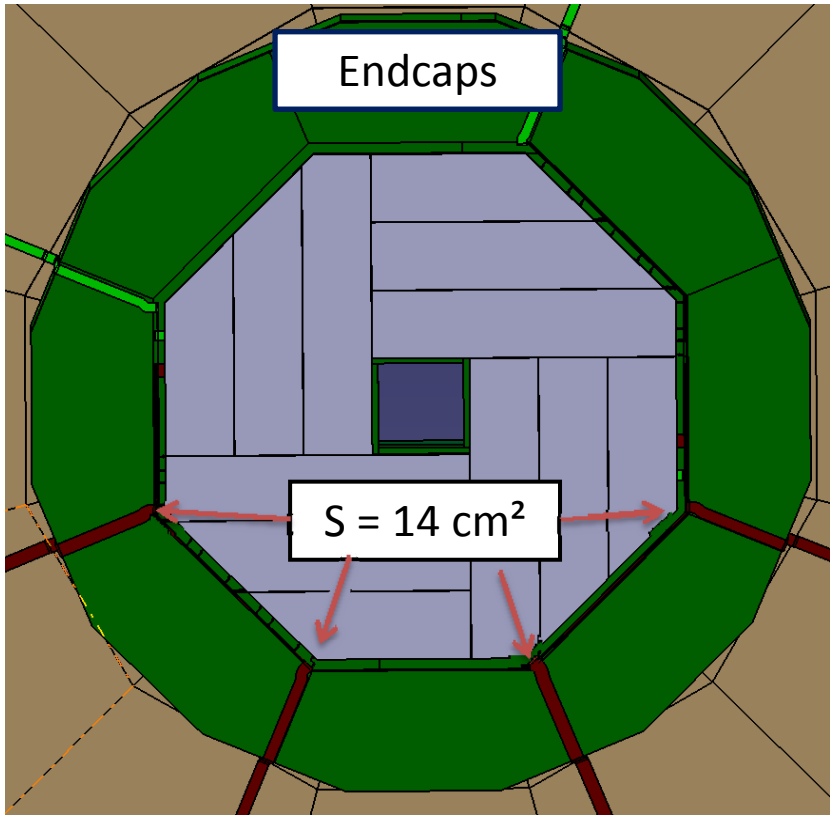

Green : air path
(no longer in this study)
Red : water pipes

Cables and services from the endcaps in the gap Barrel/endcaps:

AHCAL electronic in the gap ⇨ those services cannot be distributed on all the circumference ; i.e. They have to find their way in the 16 paths.
+ Due to the positions of the exit of the slabs : 8 ways, same than Ecal barrel

Ecal :

- Cooling = 56 cm^2 (minimal thickness 1.5 cm) Only 4 ways-out
- Cables (?)= 15Mch $\approx$ 53 cm^2 (i.e : 7 cm^2 in 8 paths)

ETD : not yet considered.

Services section vs way-out

Missing : TPC cooling
Liquid supply line = 5 mm ID; 7 OD
Vapor return = 8 mm ID; 10 OD

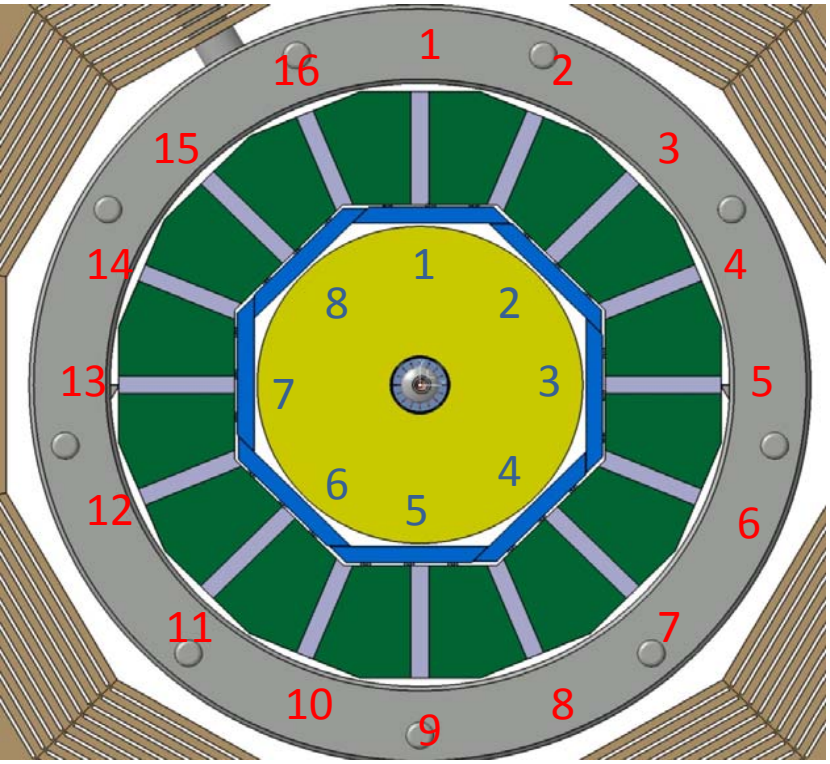

FACE Z-

	Cables				Ecal cooling		
Way in	Hcal	TPC	Ecal Barrel	Ecal Endcaps	Water Barrel Water Endcaps	Endcaps	Total cm²
1	100	0					100
2	0	10	30	7		0	47
3	100	0					100
4	0	10	30	7		0	47
5	100	0					100
6	0	10	30	7	42	14	103
7	100	0					100
8	0	10	30	7	28	14	89
9	100	0					100
10	0	10	30	7	14	14	75
11	100	0					100
12	0	10	30	7	28	14	89
13	100	0					100
14	0	10	30	7		0	47
15	100	0					100
16	0	10	30	7		0	47

Worse case : path (6), 103 cm²

Gap : Barrel-endcaps

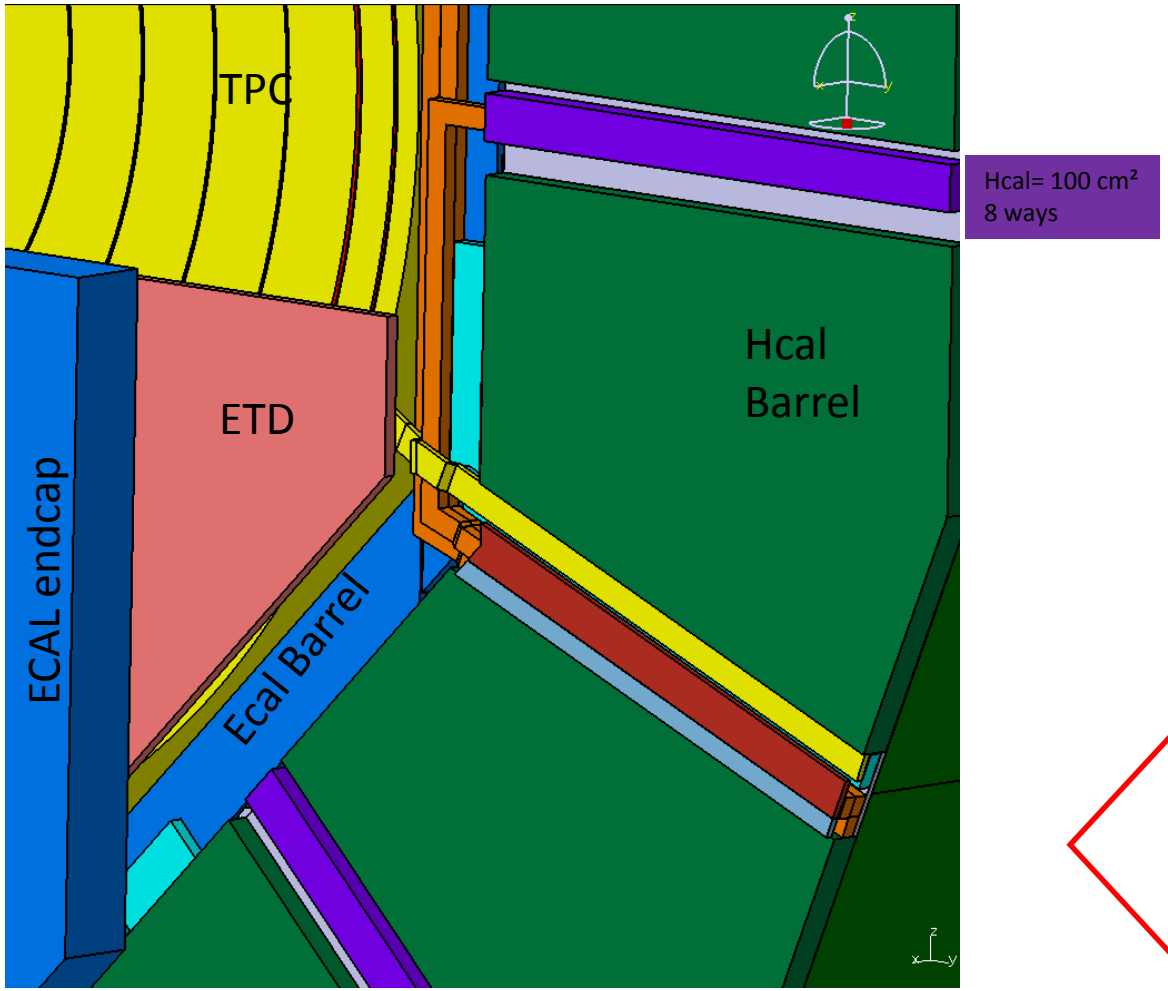

TPC cables = 10 cm²
Ecal Barrel cables= 30 cm²
Ahcal Elec. Board (7 cm)

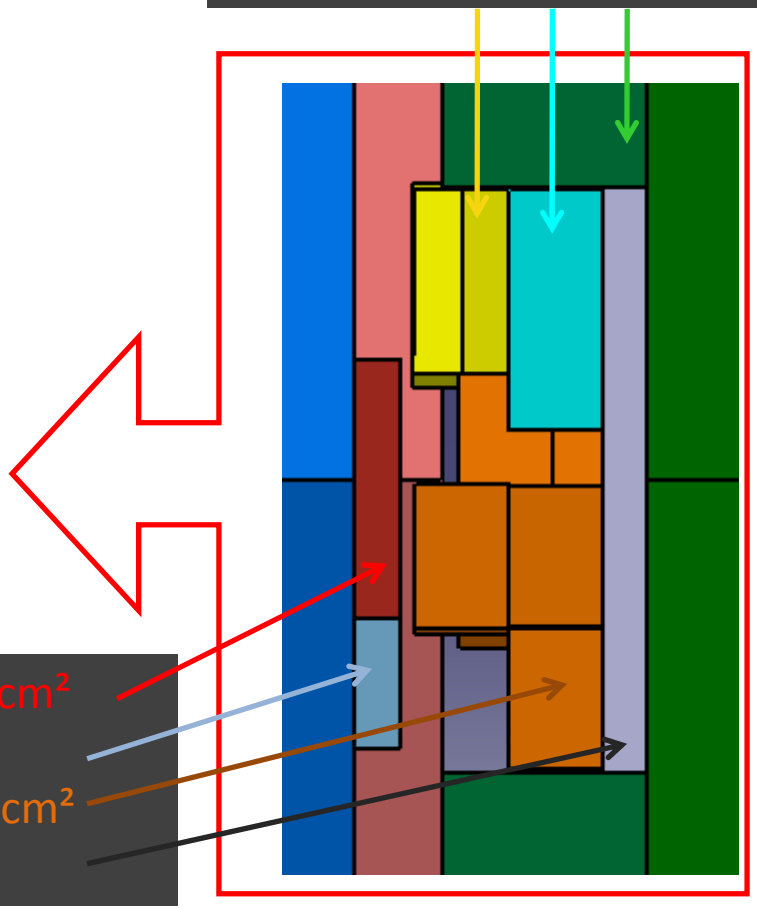

Ecal cooling (Endcaps) = 14 cm²
Ecal Endcaps cables = 7 cm²
Ecal cooling (Barrel) = 3* 14cm²
Mechanical support

Each Ecal cooling lines 14 cm²
(for 3 modules in length)

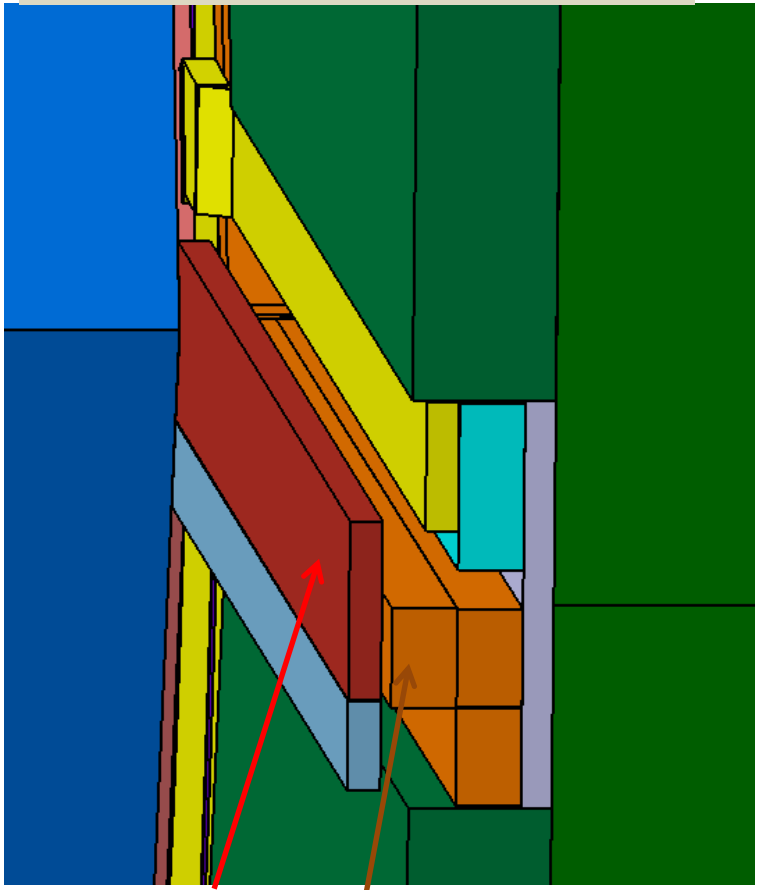

Ecal cooling (Endcaps)
Ecal cooling (Barrel)

But if connections in gaps
S = 58 cm²

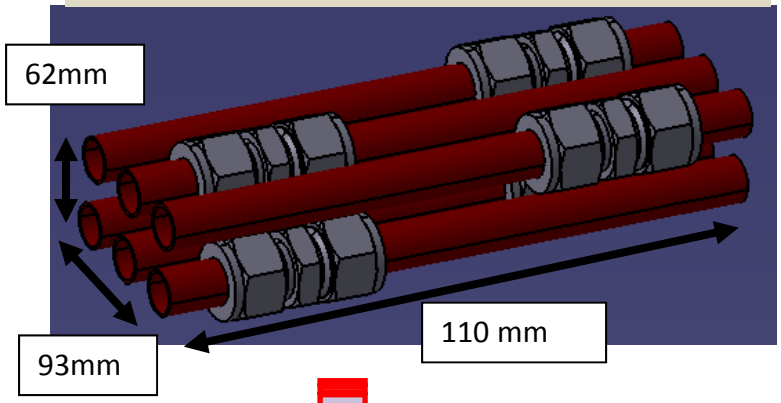

Way 6 :
S = 58 cm² X3 > 170 cm² availables
Already too much

Fixing system :3 rails Alu
10.3x3.5 cm² each

Cooling :
2 lignes in/out ∅16 per module
then 2 lignes in/out ∅6 par column

Cables
10 cm² per module

LDA & Front-end

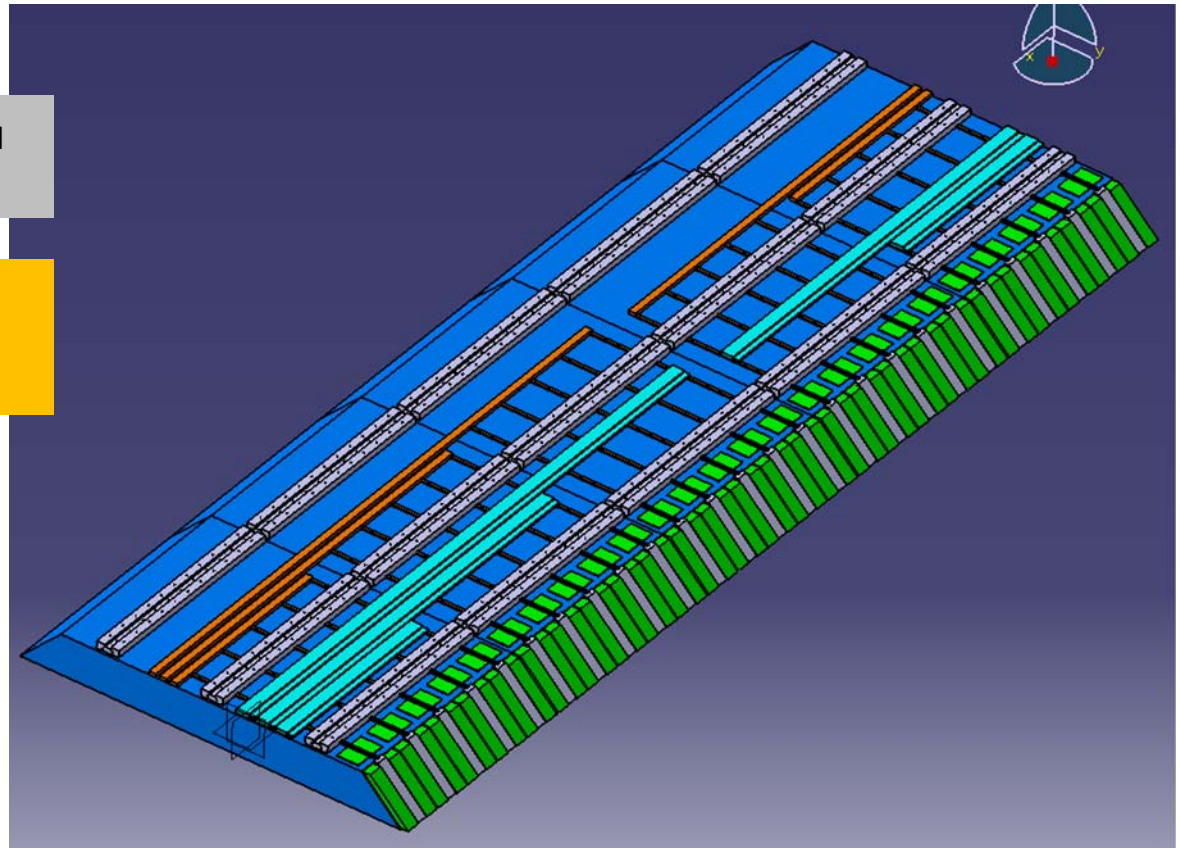

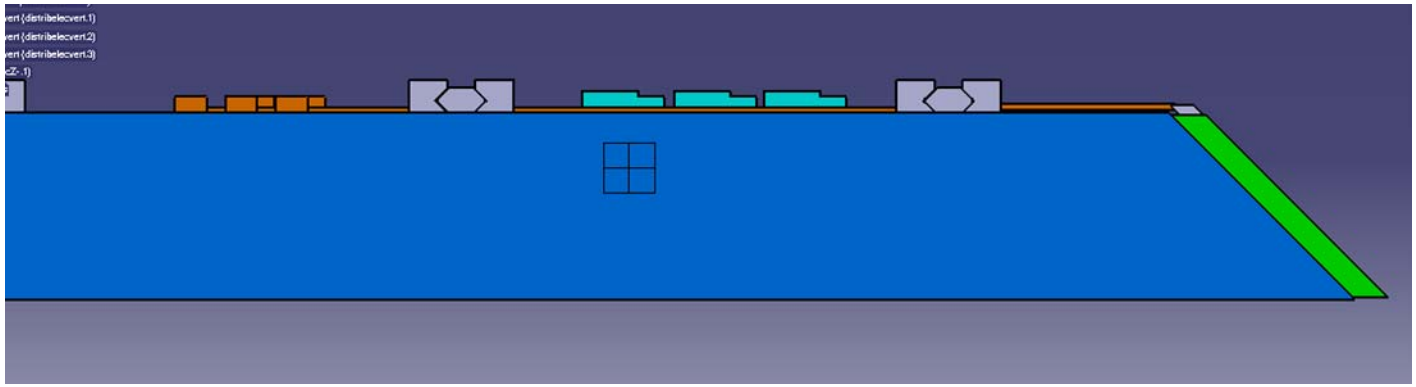

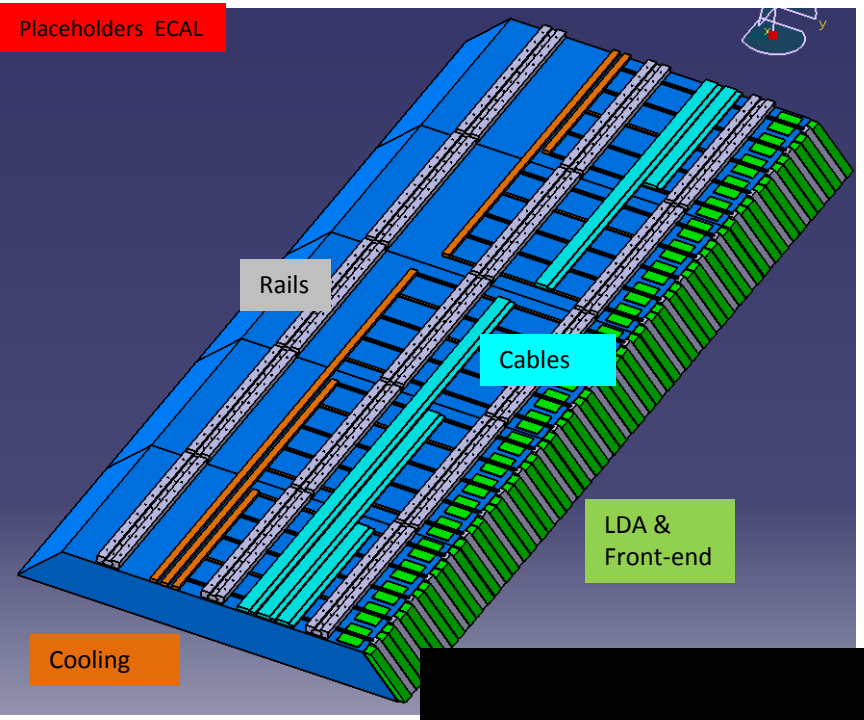
Placeholders ECAL
Rails
Cables
LDA &
Front-end
Cooling

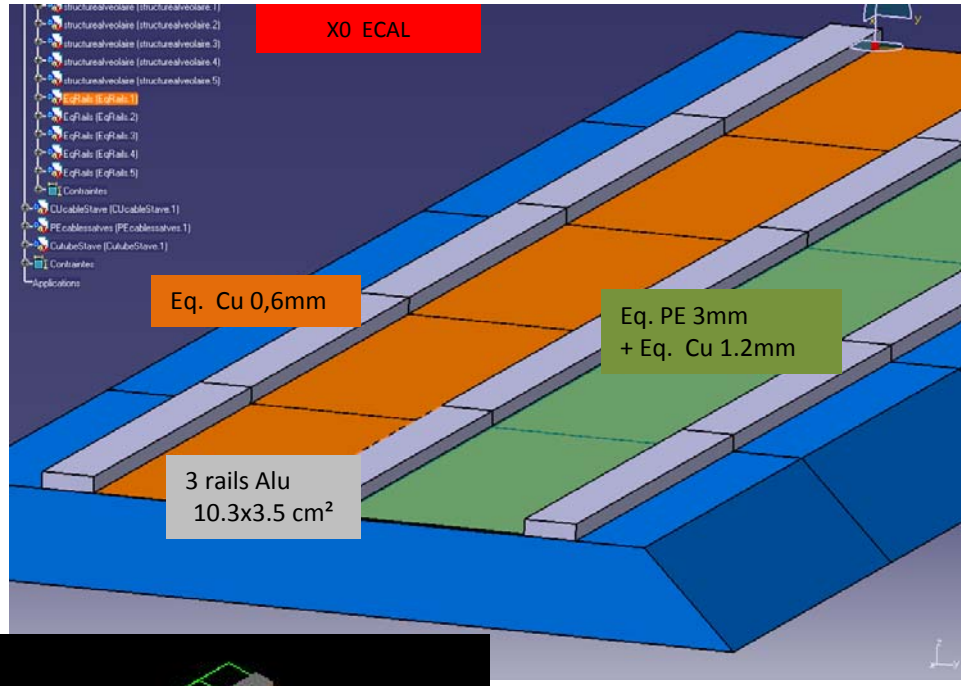
X0 ECAL
Eq. Cu 0,6mm
Eq. PE 3mm
+ Eq. Cu 1.2mm
3 rails Alu
10.3x3.5 cm²

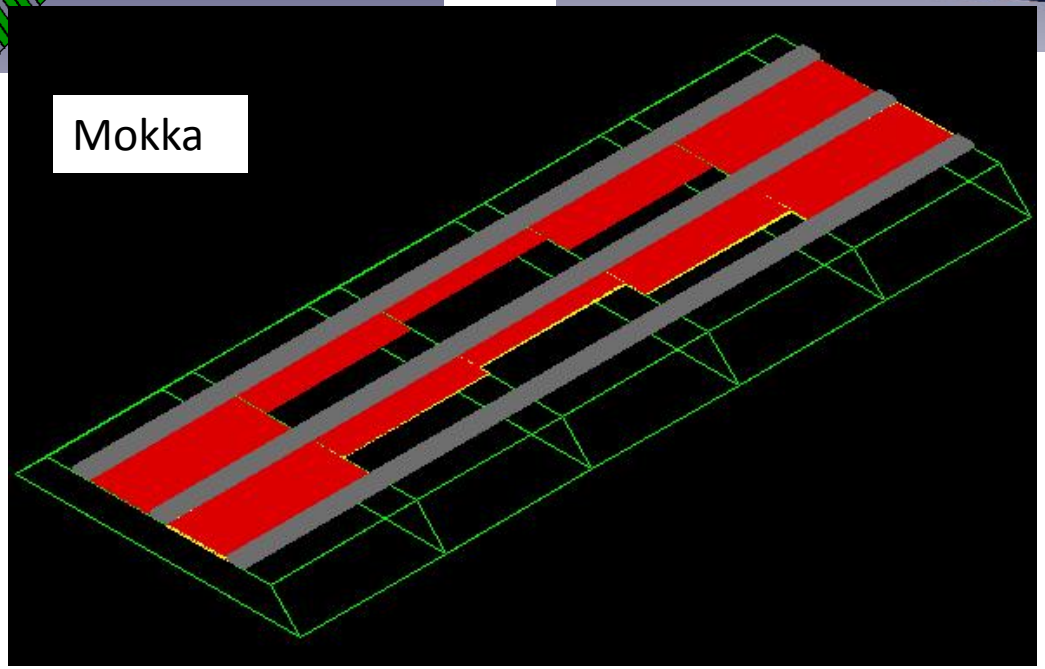
Mokka

If we don't take into account the dissymetry between face Z- and Z+

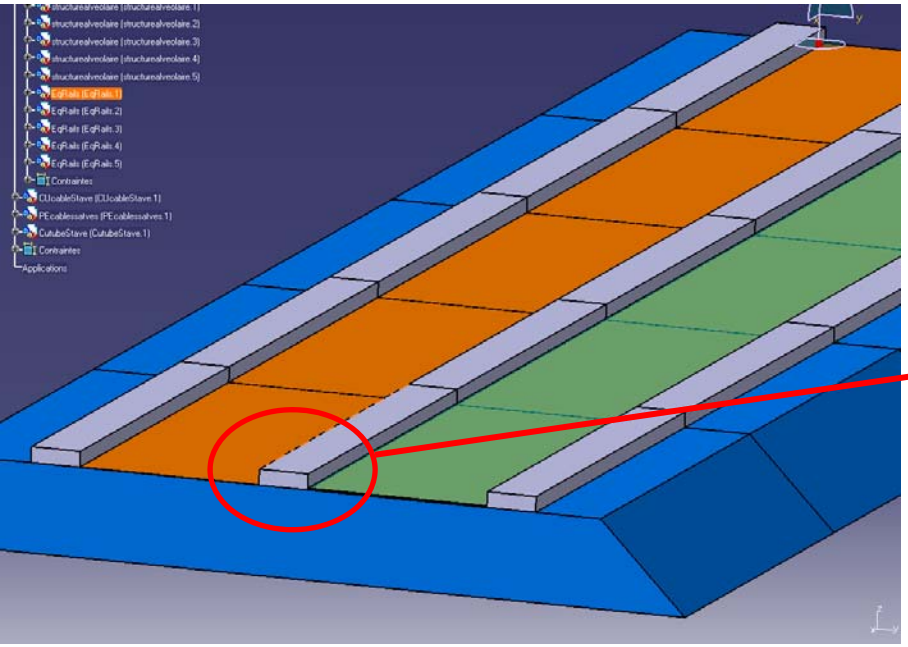

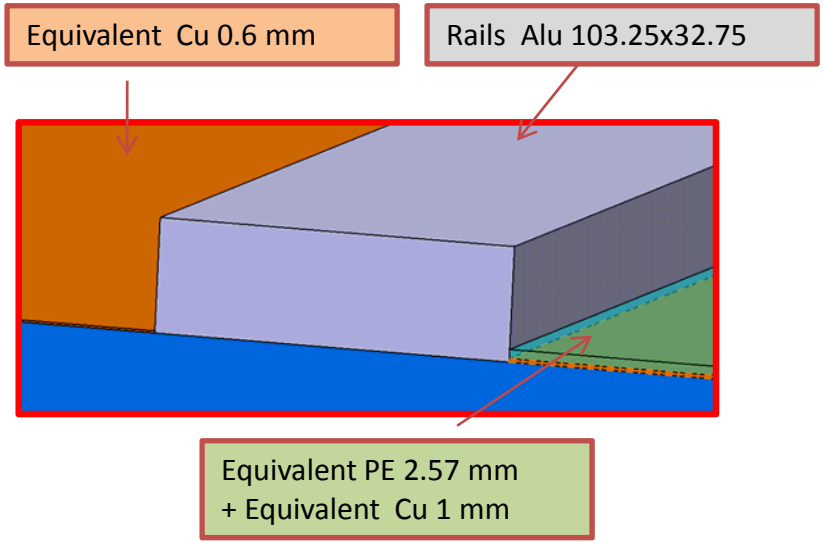

Or even simpler

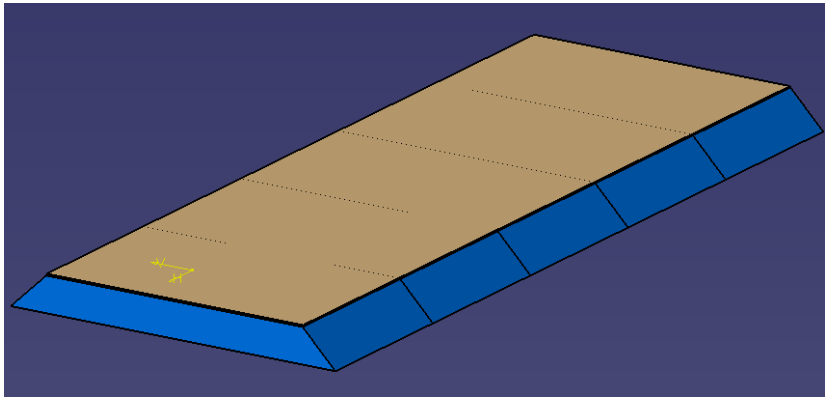

An average value all over the surface of the stave :

Eq. Thickness Al= 7.3 mm
+ Eq. Thickness Cu= 0.42 mm
+Eq. Thickness PE= 0.7 mm

In the 16 ways in front of Hcal

- Support SS 1.5 cm thick
- Polyethylene
- Cu

	Z-	Z+	Average
Cu (mm)	0,82	0,74	0,78
Cu X0	57,01%	51,41%	54,21%
PE	2,75	2,56	2,65
PE X0	5,85%	5,44%	5,65%

In MOKKA !

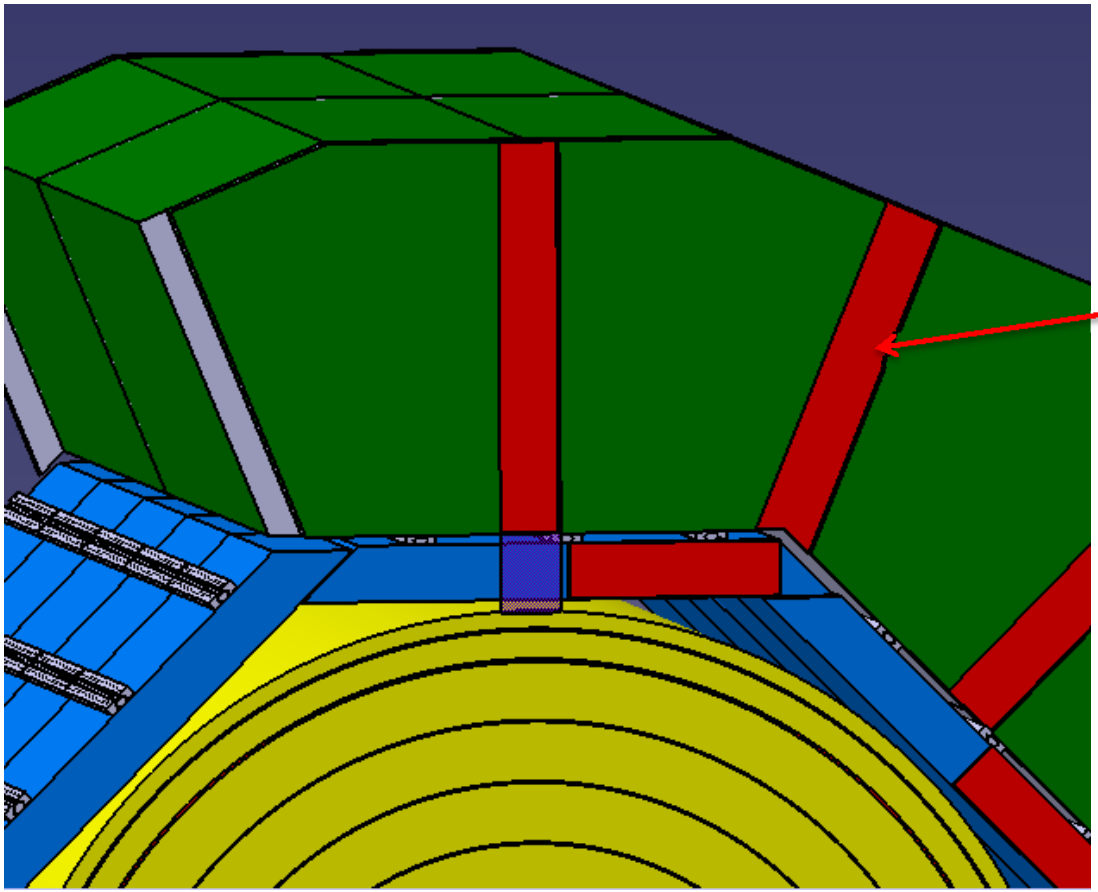

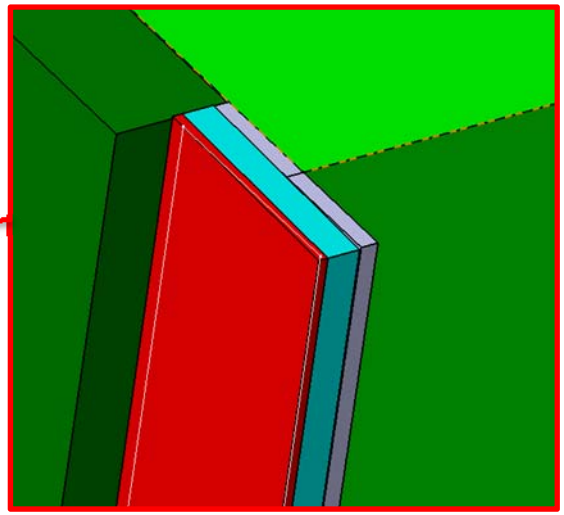

In the 8 ways in front of Ecal stave

- Polyethylene
- Cu

Ecal front part

	Z-	Z+	Average
Cu (mm)	0,52	0,35	0,44
Cu X0	36,34%	24,22%	30,28%
PE	1,24	0,83	1,04
PE X0	2,65%	2,20%	2,43%

In MOKKA !

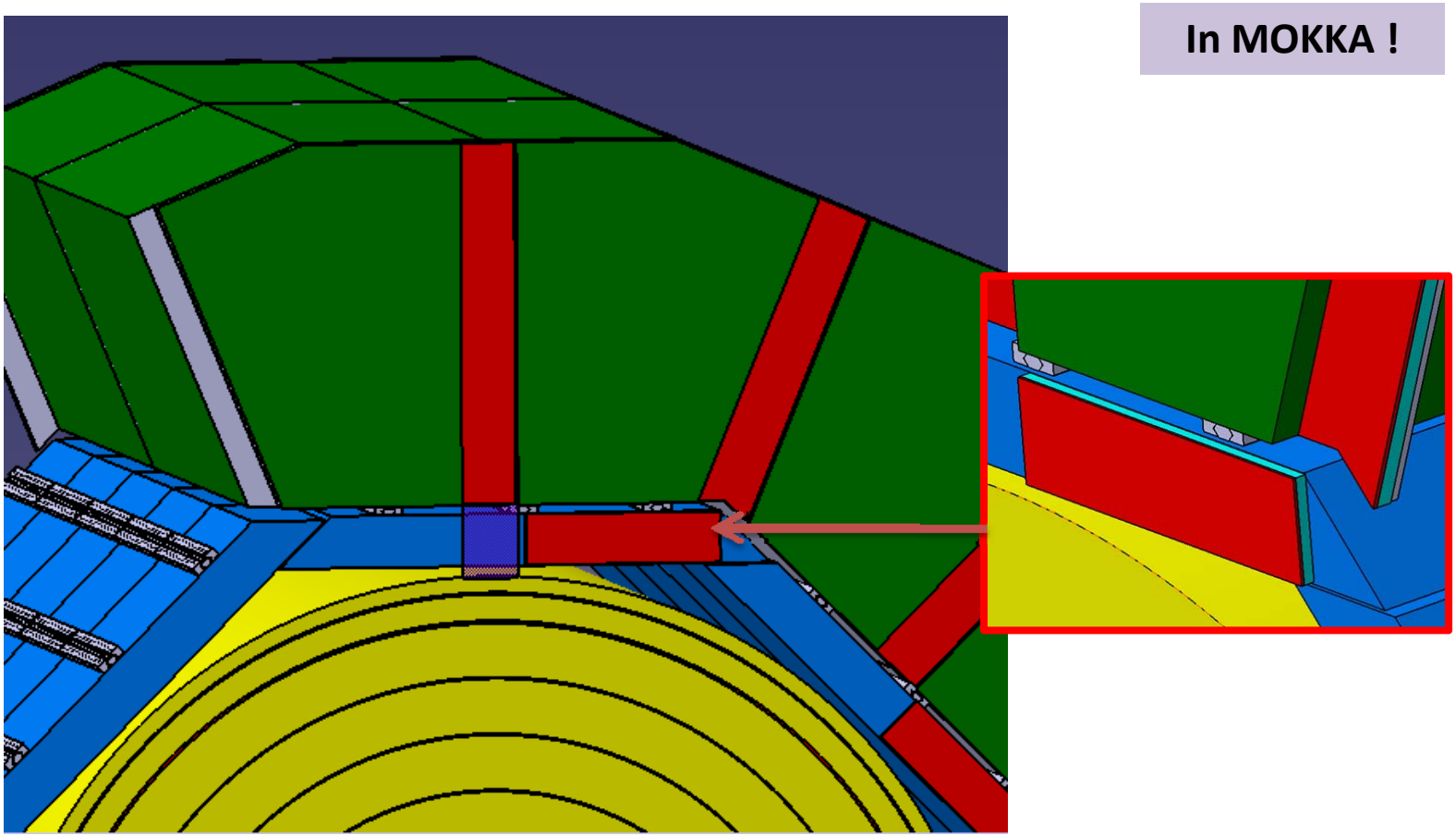

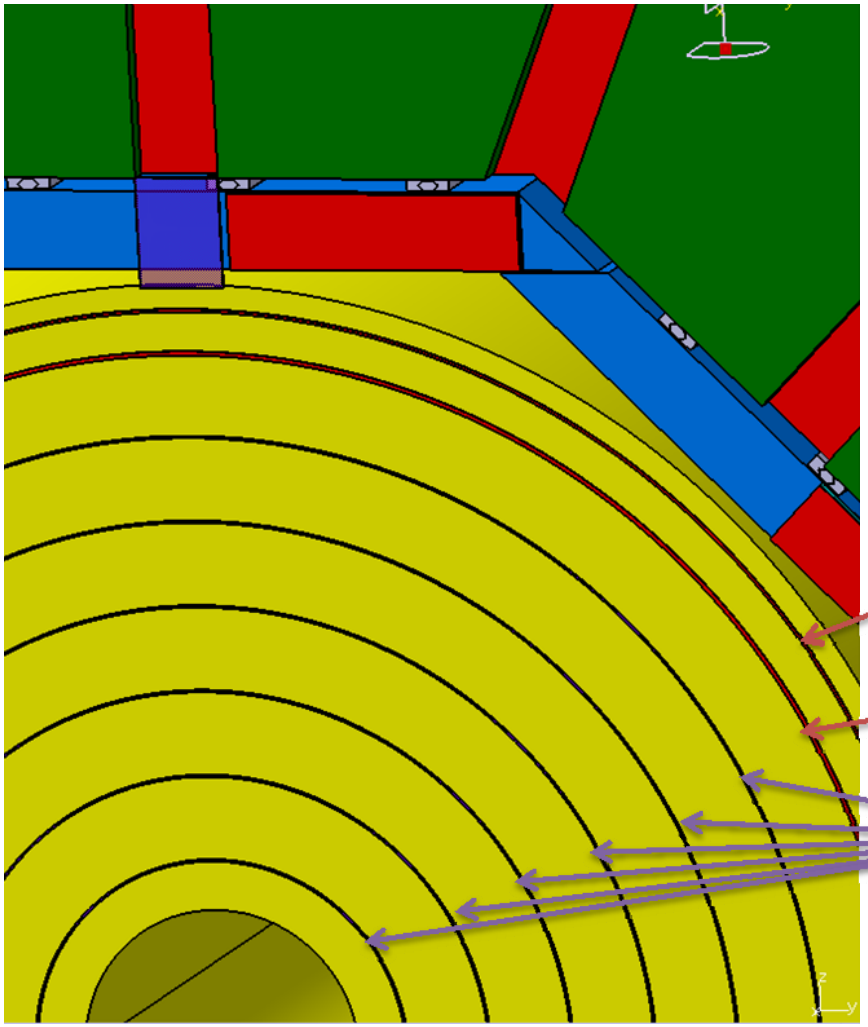

rings of equivalent thickness in copper

Liquid supply ring 7x2.7 mm²

Vapor return ring 10x2.8 mm²

6 Cooling tubes 4x1.9 mm²

IN MOKKA !

3D PDF view from Mokka (G.Musat- P.Mora de Freitas)

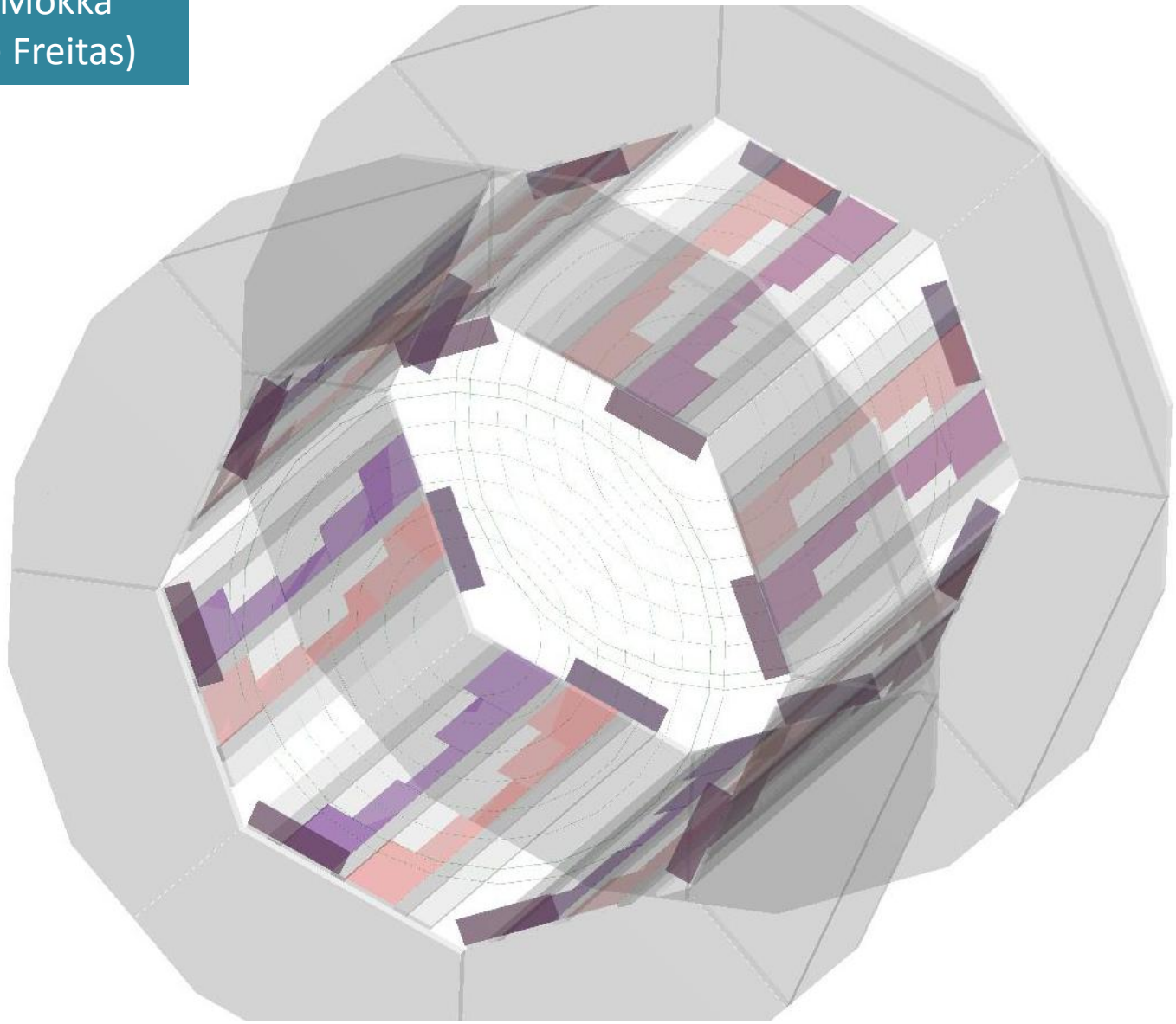

Now....

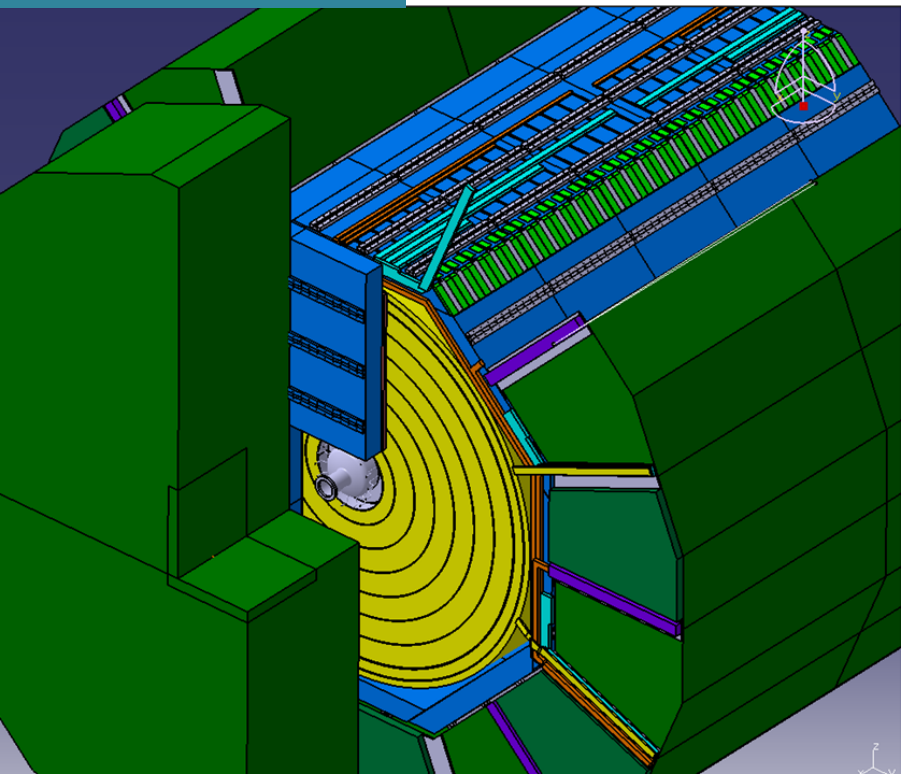

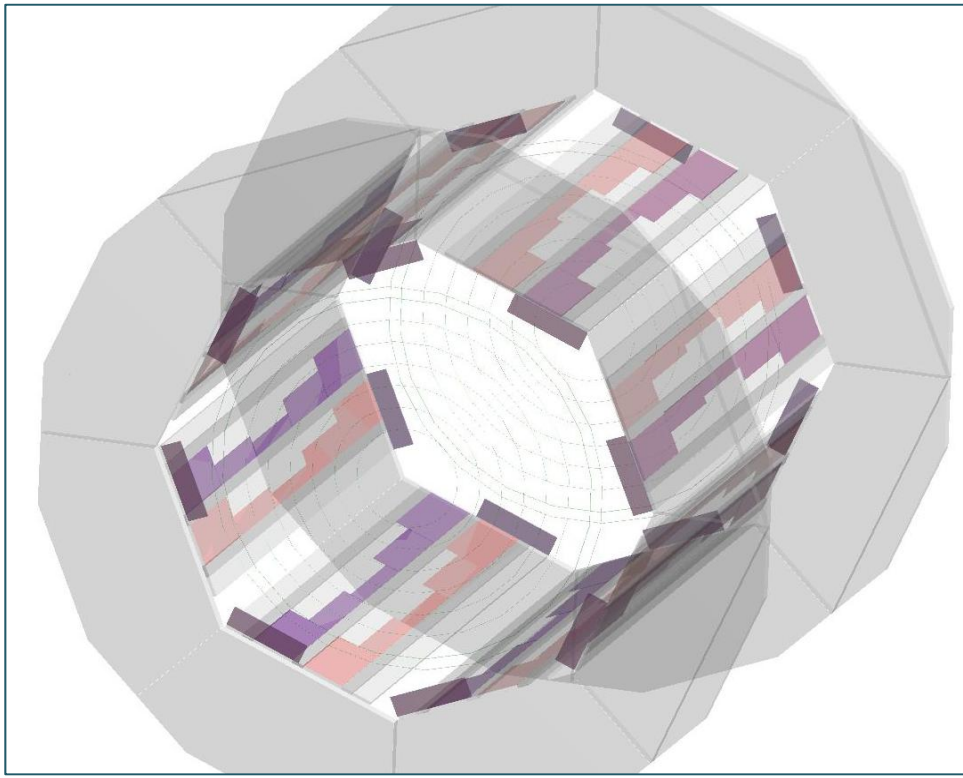

Then....

- Higher level of dissymetry in the gap Barrel-endcap in the simulation ?
- DHcal model
- Inner part ???

Backup slides

Gap : Barrel-endcaps