IWLC2010 International Workshop on Linear Colliders 2010

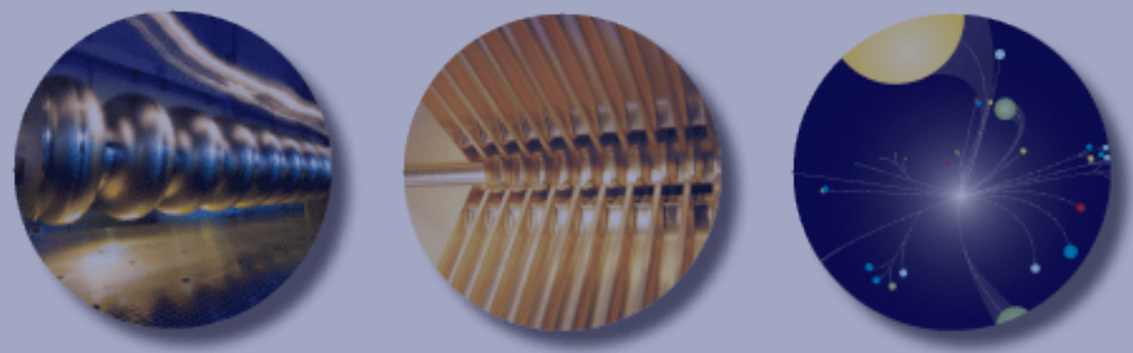

Highlights from the Commissioning of **the PHIN Photoinjector**

Öznur Mete, CERN/EPFL
for the PHIN Team

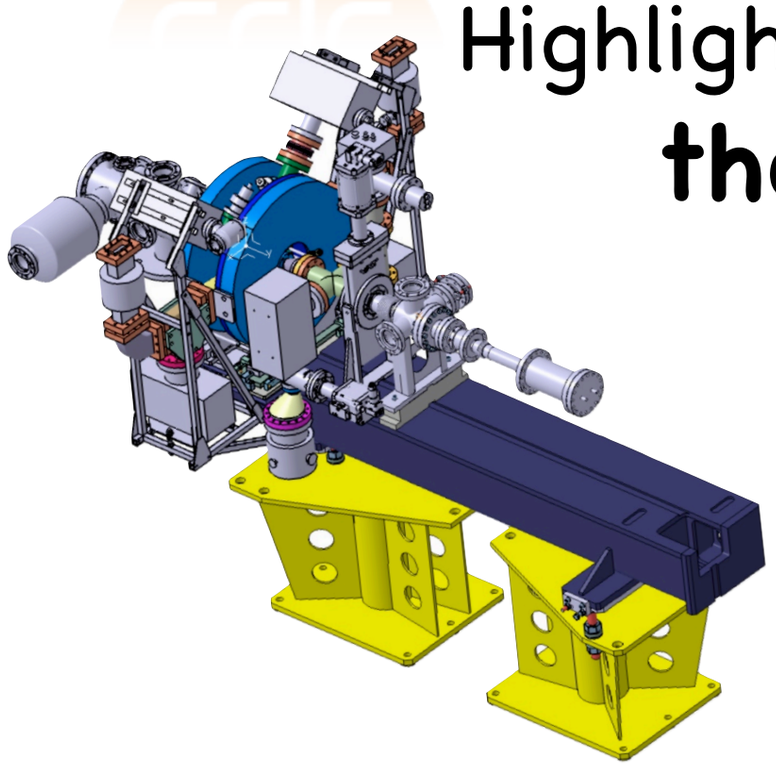

Outline

Why a photoinjector ?

Introduction to the PHIN photoinjector at CERN

Highlights from the commissioning

- High charge production
- Time-resolved measurements
- Measurements at full train

Stability

Conclusions

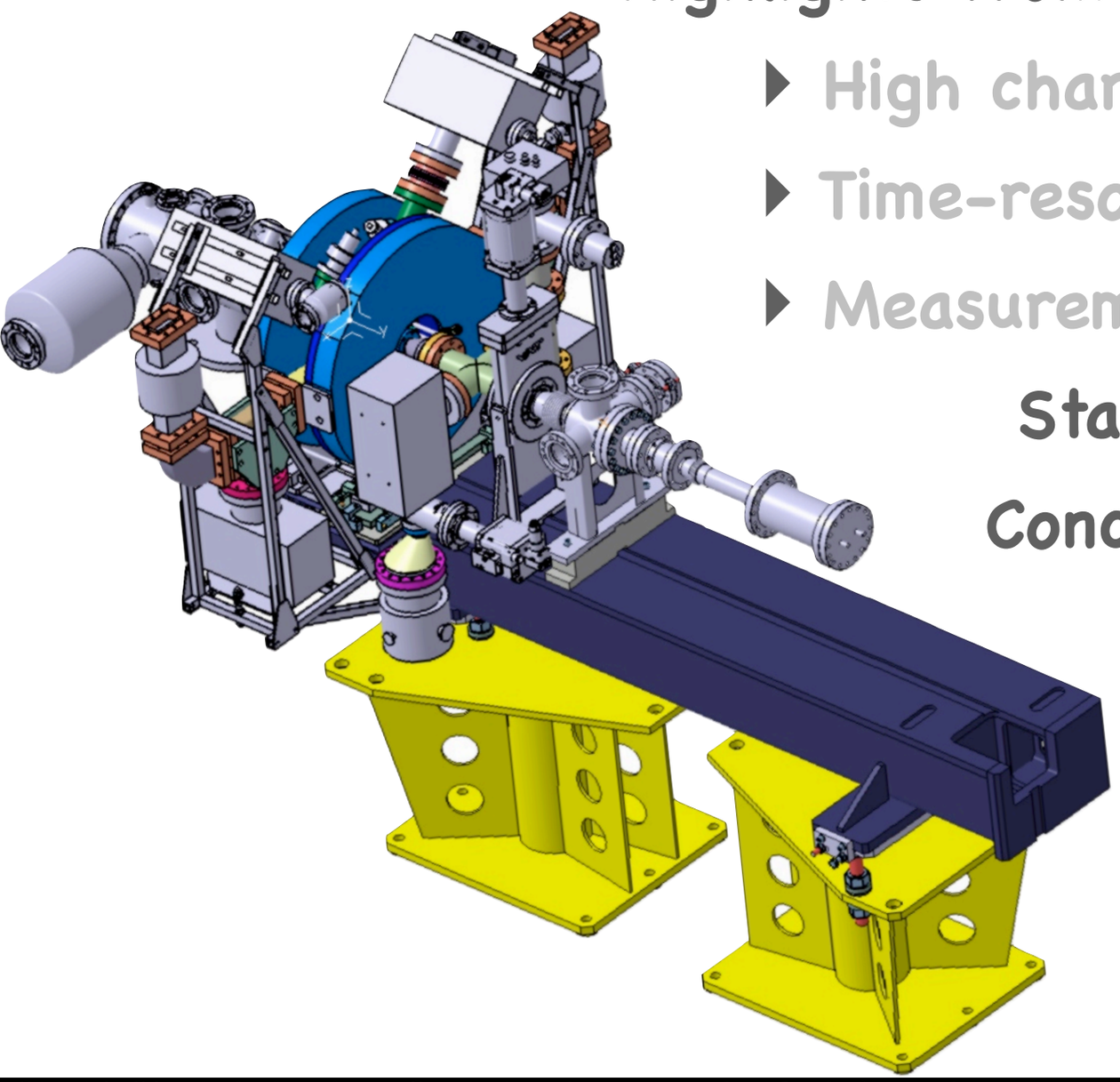

Why a photoinjector?

- A photoinjector as an option for electron sources
  - **High brightness electron beam,** High QE semiconductor cathodes, short bunches
  - **No requirement for the additional bunching system,**
    - Compactness
    - Elimination of the satellite bunch production

    The time structure of the electron beam easily manipulated by coding the laser temporal structure.

    Marta Csatari's Talk
  - **Low transverse emittance**
    - Laser spot size and shape can be optimized to obtain a low emittance

As a conclusion from
the ICFA Future Light Sources Conference
http://www-conf.slac.stanford.edu/icfa2010/

$$\epsilon_{x,y,n}[mm\,mrad] \approx 1\mu m\sqrt{Q[nC]}$$

- **Low thermal emittance**

Kinetic energy of the electrons that are emerging from the Cs2Te cathode surface = 0.55 eV

$$\epsilon_{n,th} = \gamma\frac{r_c}{2}\sqrt{\frac{k_b T_e}{m_e c^2}}$$

Nominal Case

Smallest contribution to the total beam emittance of PHIN

Parameter	Model
Space Charge Induced Emittance (mm mrad)	10.3
RF Induced Emittance (mm mrad)	1.33
Thermal Emittance (mm mrad)	0.42
Total Beam Dynamics Emittance (mm mrad)	10.4
Typical e^- Beam Size (mm)	1
Angular Beam Divergence (mrad)	7.4

Introduction to the PHIN Photoinjector

PHIN - Photoinjector R&D within the framework of CARE* program.

*Coordinated Accelerator Research in Europe

- RF Gun (LAL)
- Laser (RAL)
- Cathode production (CERN)
- Overall coordination (CERN)
- Commissioning (CERN)

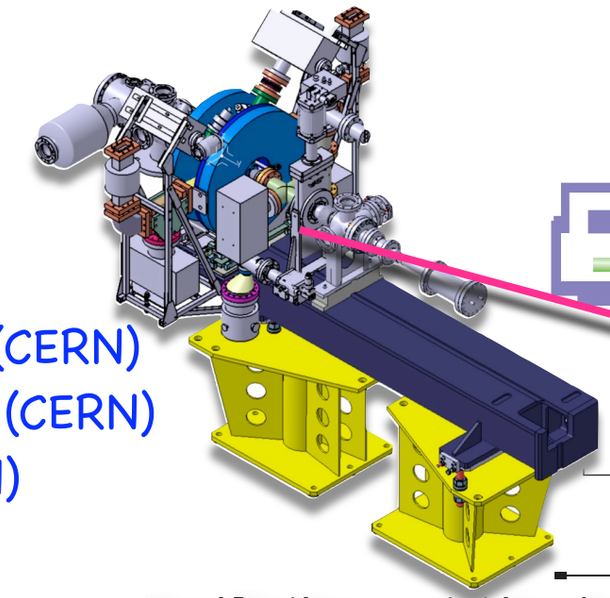

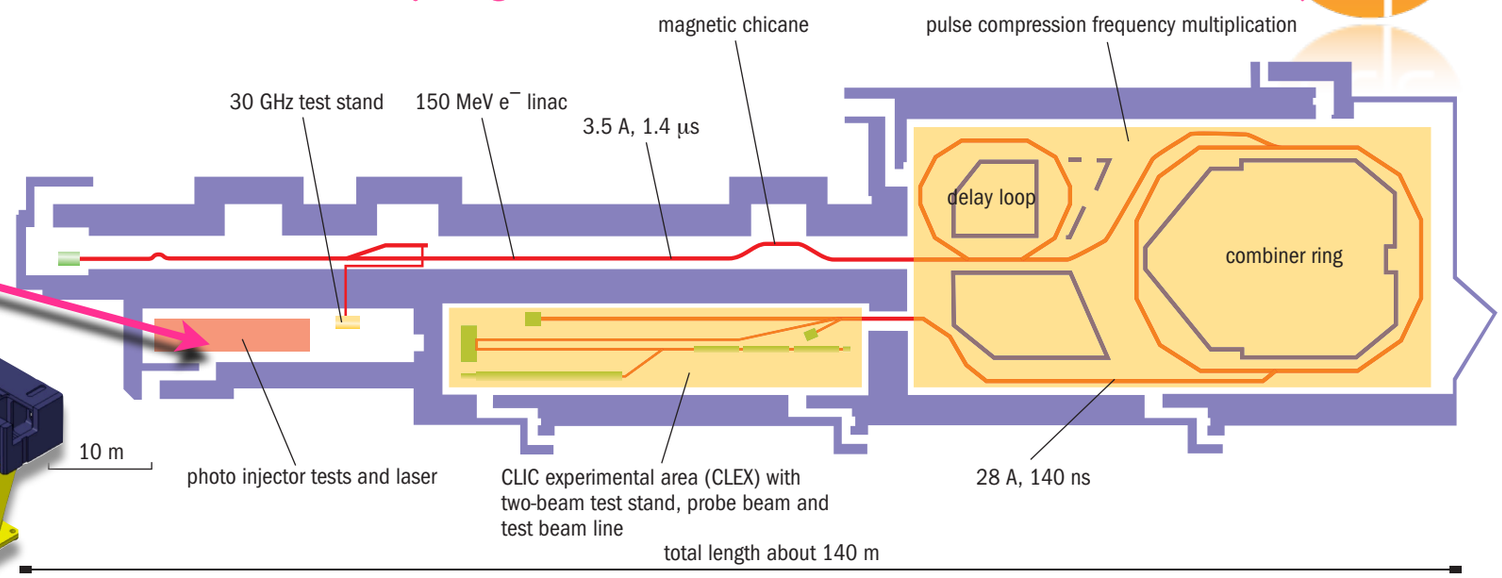

Parameter	Specification	Achieved
Charge per Bunch (nC)	2.33	
Charge per Train (nC)	4446	
Train Length (ns)	1273	
Current (A)	3.5	
Normalized Emittance (mm mrad)	<25	
Energy Spread (%)	<1	
Energy (MeV)	5.5	
UV Laser Pulse Energy (nJ)	370	
Charge Stability (%)	<0.25 rms	
Cathode	Cs_2Te	
Quantum Efficiency (%)	3	
RF Gradient (MV/m)	85	
RF Frequency (GHz)	2.99855	
Micropulse Repetition Rate (GHz)	1.5	
Macropulse Repetition Rate (Hz)	1-5	

We will see later...

S. Dobert. Integration of the PHIN RF Gun into the CLIC Test Facility.
Prepared for European Particle Accelerator Conference (EPAC 06), Edinburgh, Scotland, 26-30 Jun 2006.
R. Roux. Conception of Photo-injectors for CTF3 Experiment.
International Journal of Modern Physics A, Vol.22, No. 22 (2007) 3925-3941.

Introduction to the PHIN Photoinjector

PHIN - Photoinjector R&D within the framework of CARE* program.

*Coordinated Accelerator Research in Europe

- RF Gun (LAL)
- Laser (RAL)
- Cathode production (CERN)
- Overall coordination (CERN)
- Commissioning (CERN)

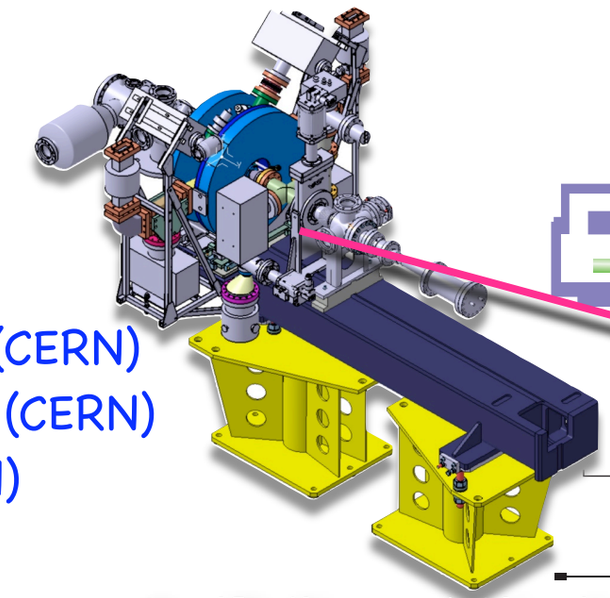

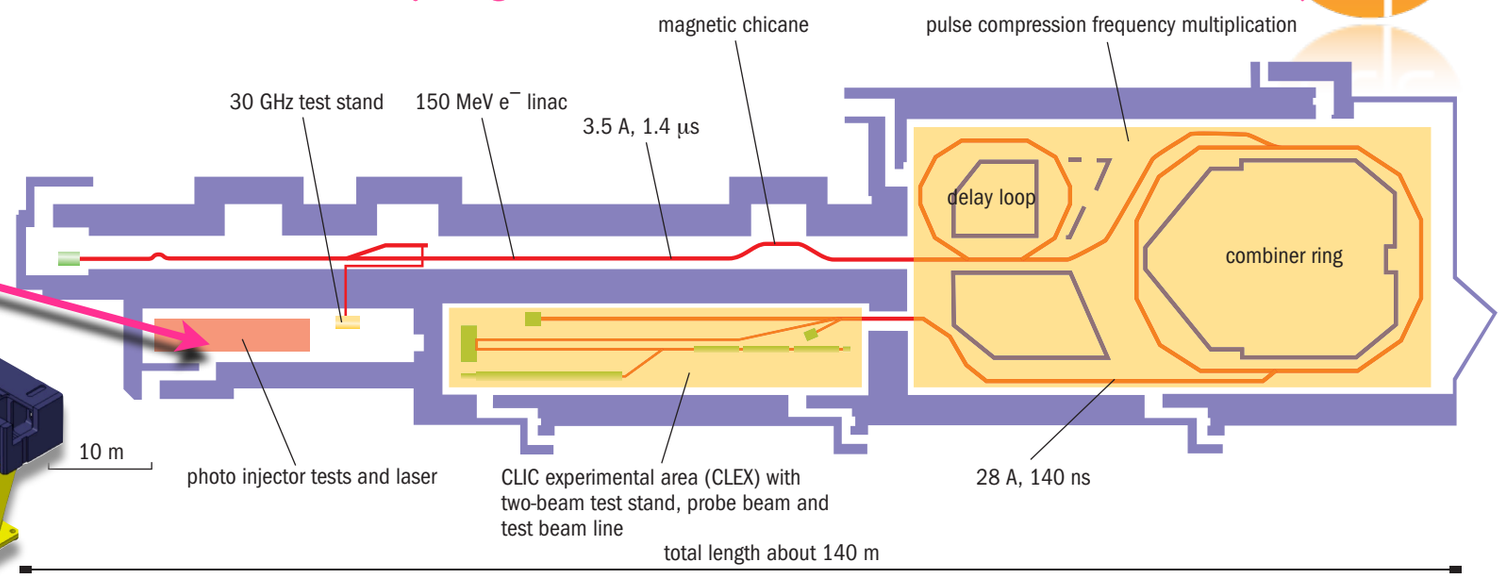

Parameter	Specification	Achieved
Charge per Bunch (nC)	2.33	
Charge per Train (nC)	4446	
Train Length (ns)	1273	
Current (A)	3.5	
Normalized Emittance (mm mrad)	<25	
Energy Spread (%)	<1	
Energy (MeV)	5.5	
UV Laser Pulse Energy (nJ)	370	
Charge Stability (%)	<0.25 rms	
Cathode	Cs_2Te	
Quantum Efficiency (%)	3	
RF Gradient (MV/m)	85	
RF Frequency (GHz)	2.99855	
Micropulse Repetition Rate (GHz)	1.5	
Macropulse Repetition Rate (Hz)	1-5	

We will see later...

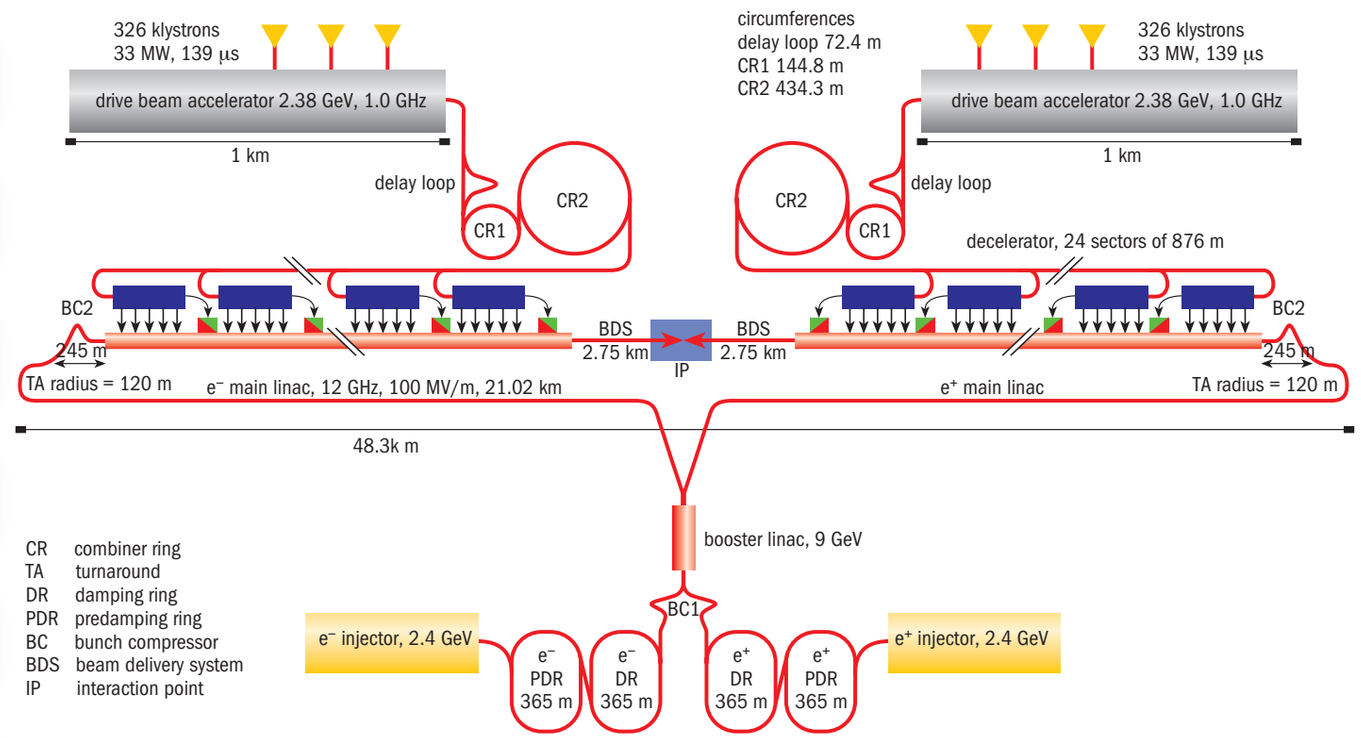

S. Dobert. Integration of the PHIN RF Gun into the CLIC Test Facility.
Prepared for European Particle Accelerator Conference (EPAC 06), Edinburgh, Scotland, 26-30 Jun 2006.

R. Roux. Conception of Photo-injectors for CTF3 Experiment.
International Journal of Modern Physics A, Vol.22, No. 22 (2007) 3925-3941.

Introduction to the PHIN Photoinjector

PHIN - Photoinjector R&D within the framework of CARE* program.

*Coordinated Accelerator Research in Europe

- RF Gun (LAL)
- Laser (RAL)
- Cathode production (CERN)
- Overall coordination (CERN)
- Commissioning (CERN)

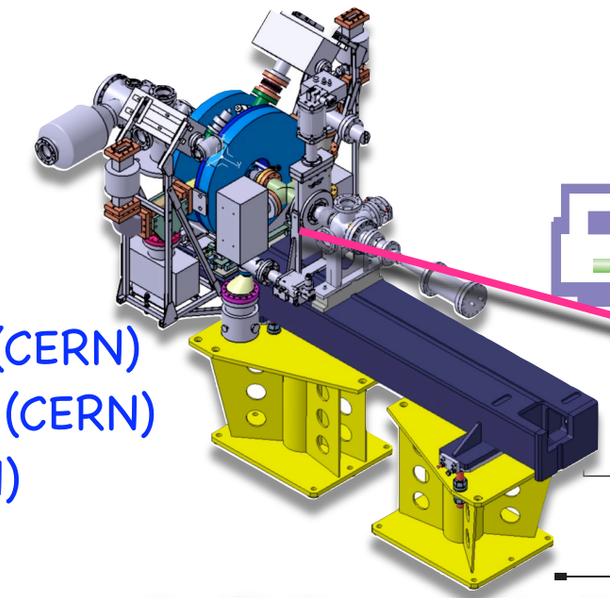

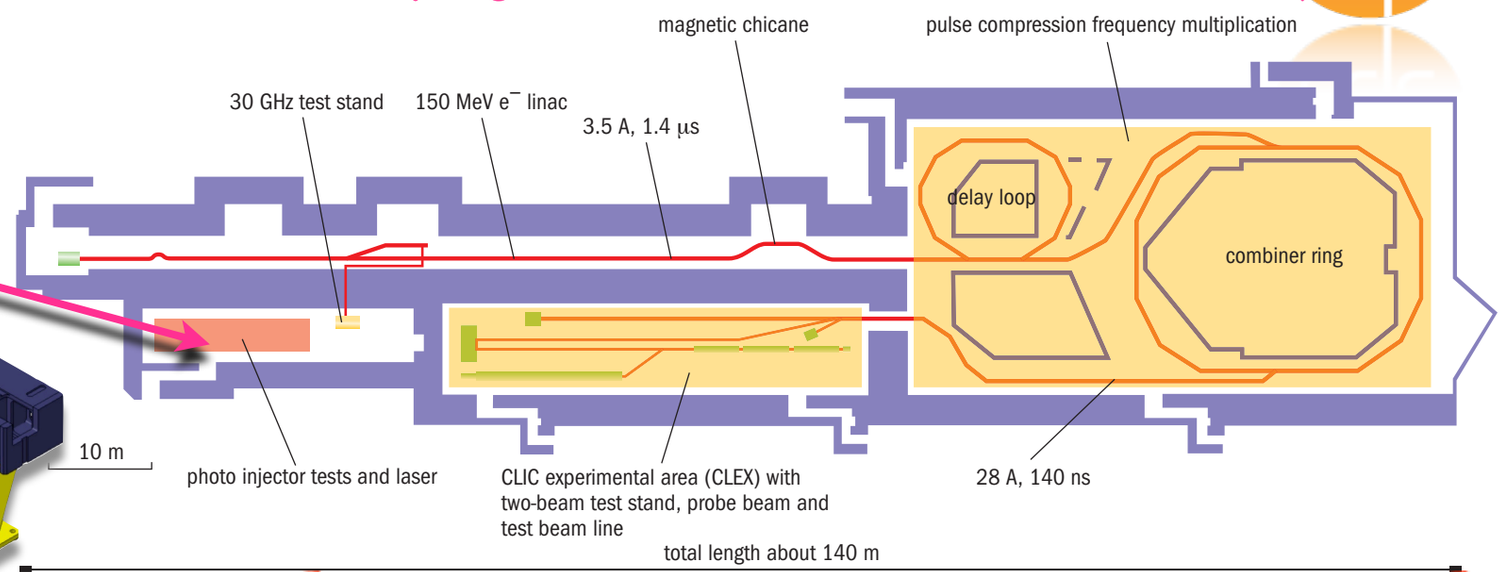

Parameter	Specification	Achieved
Charge per Bunch (nC)	2.33	
Charge per Train (nC)	4446	
Train Length (ns)	1273	
Current (A)	3.5	
Normalized Emittance (mm mrad)	<25	
Energy Spread (%)	<1	
Energy (MeV)	5.5	
UV Laser Pulse Energy (nJ)	370	
Charge Stability (%)	<0.25 rms	
Cathode	Cs_2Te	
Quantum Efficiency (%)	3	
RF Gradient (MV/m)	85	
RF Frequency (GHz)	2.99855	
Micropulse Repetition Rate (GHz)	1.5	
Macropulse Repetition Rate (Hz)	1-5	

We will see later...

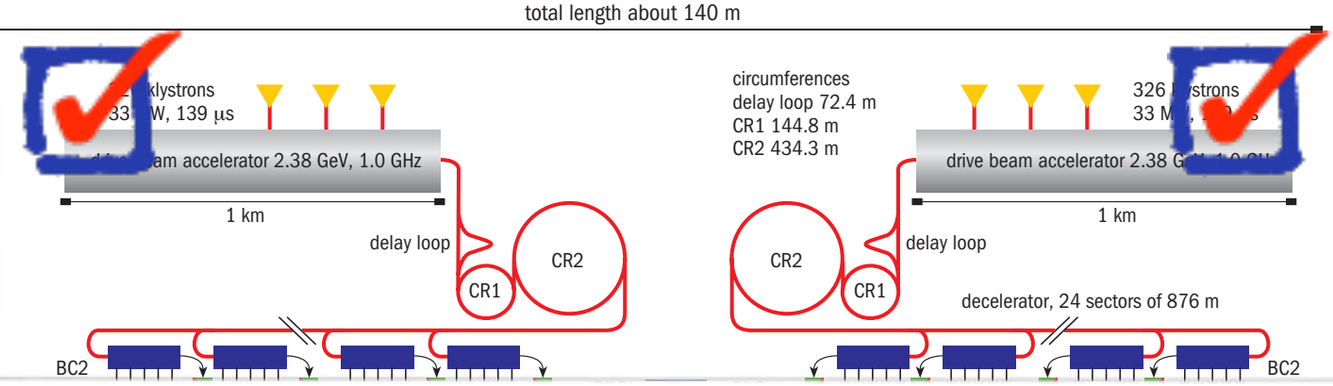

A photoinjector is a possible source for the CLIC DB

- investigation of the feasibility based on the learned lesson from PHIN.
- a conceptual study is ongoing for the optimization of a 1 GHz, 8.4 nC RF gun. (BACK-UP)

S. Dobert. Integration of the PHIN RF Gun into the CLIC Test Facility.
Prepared for European Particle Accelerator Conference (EPAC 06), Edinburgh, Scotland, 26-30 Jun 2006.

R. Roux. Conception of Photo-injectors for CTF3 Experiment.
International Journal of Modern Physics A, Vol.22, No. 22 (2007) 3925-3941.

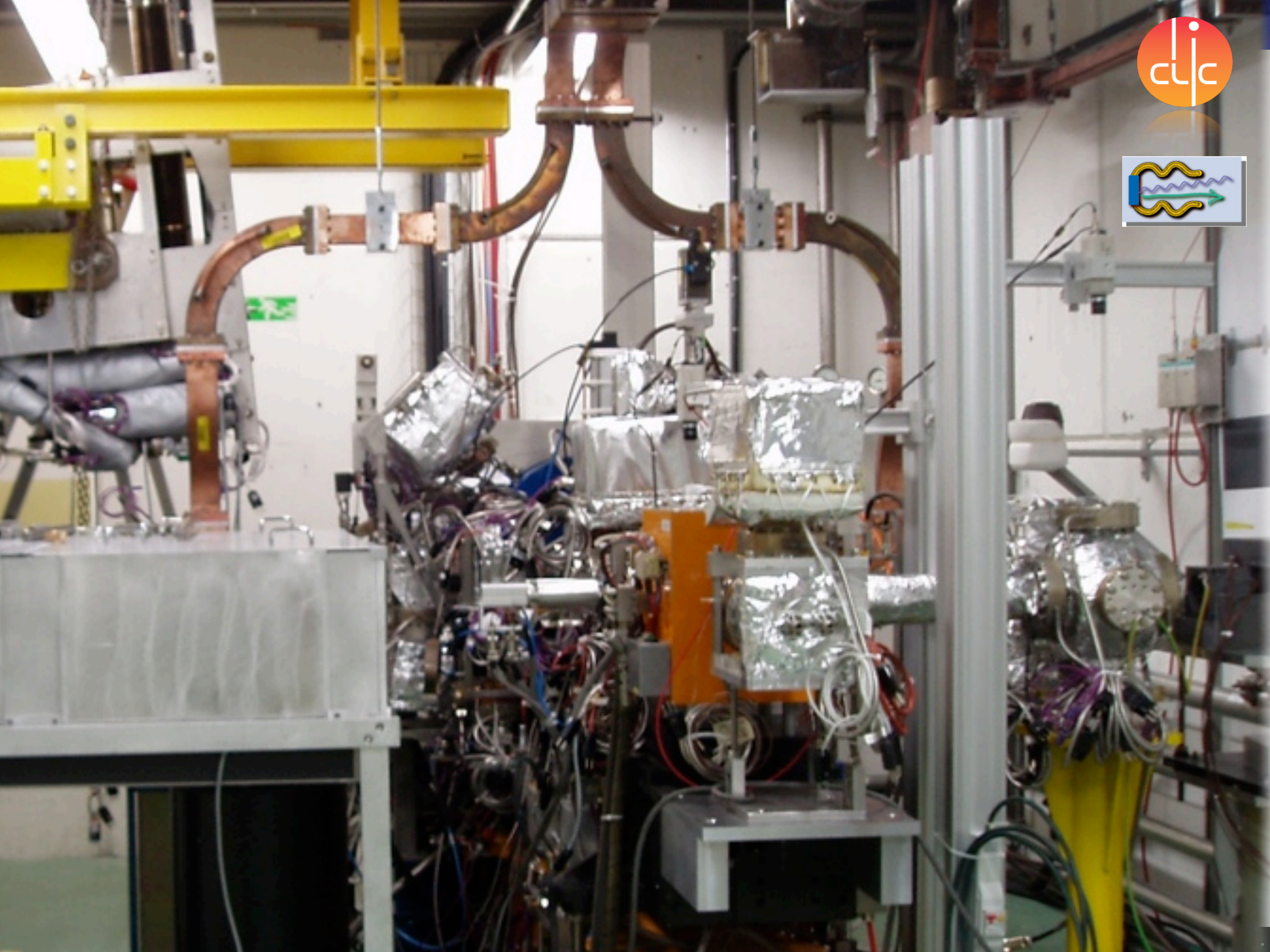

Charge Production Studies

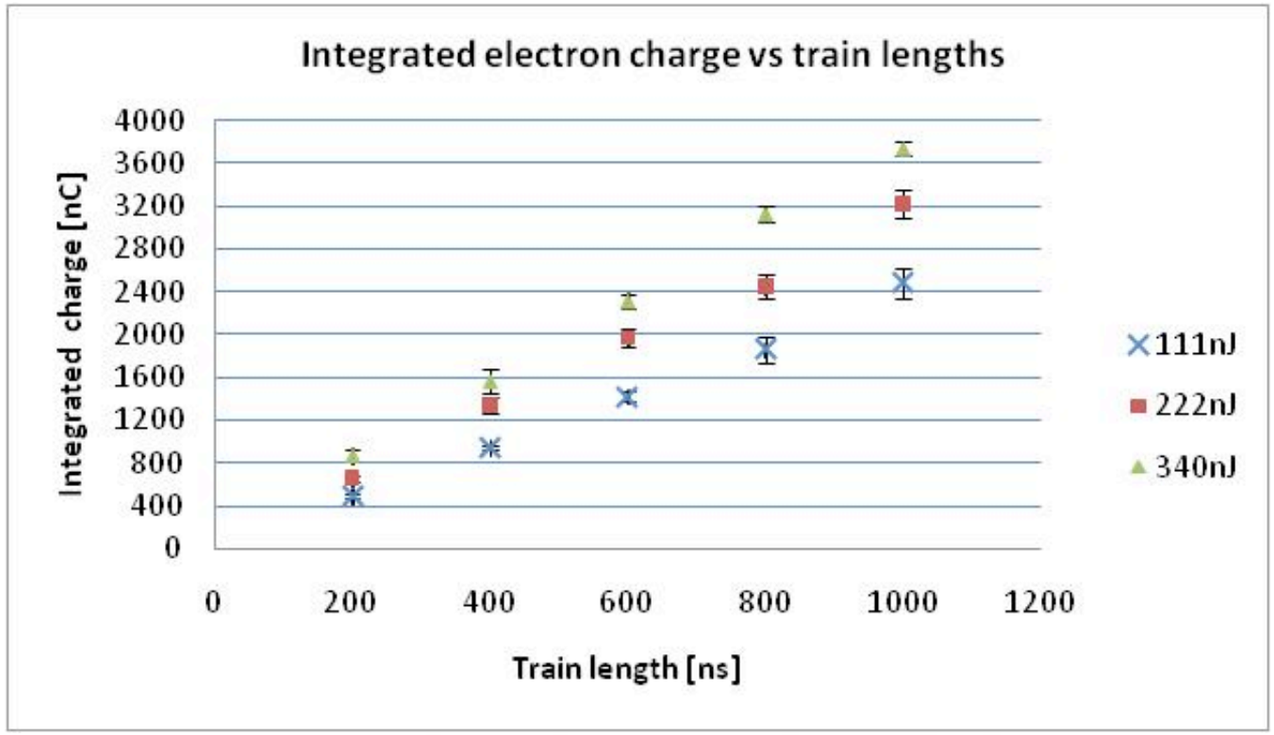

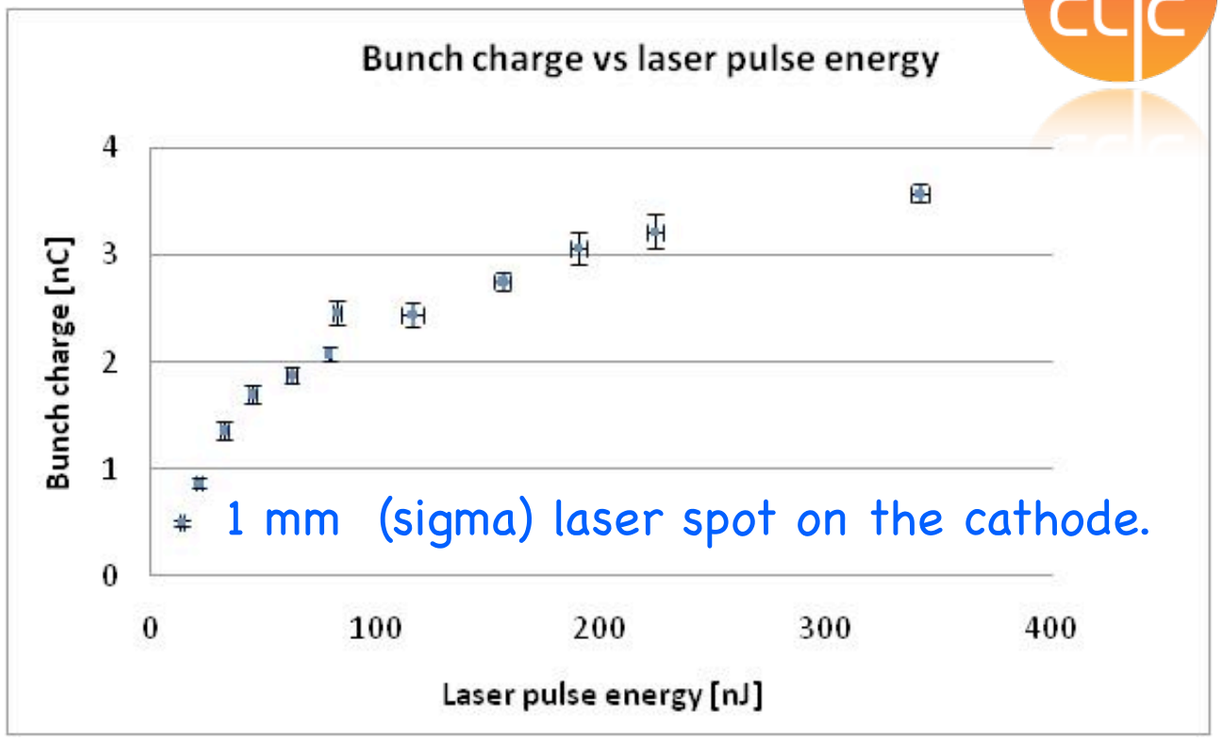

- For each curve micropulse energy is constant
- Macropulse length is increasing for each data point
- Integrated charge increases linearly with the macropulse length
- No saturation effect from the macropulse

- Fix macropulse length
- Extracted charge saturates with the increasing micropulse energy.

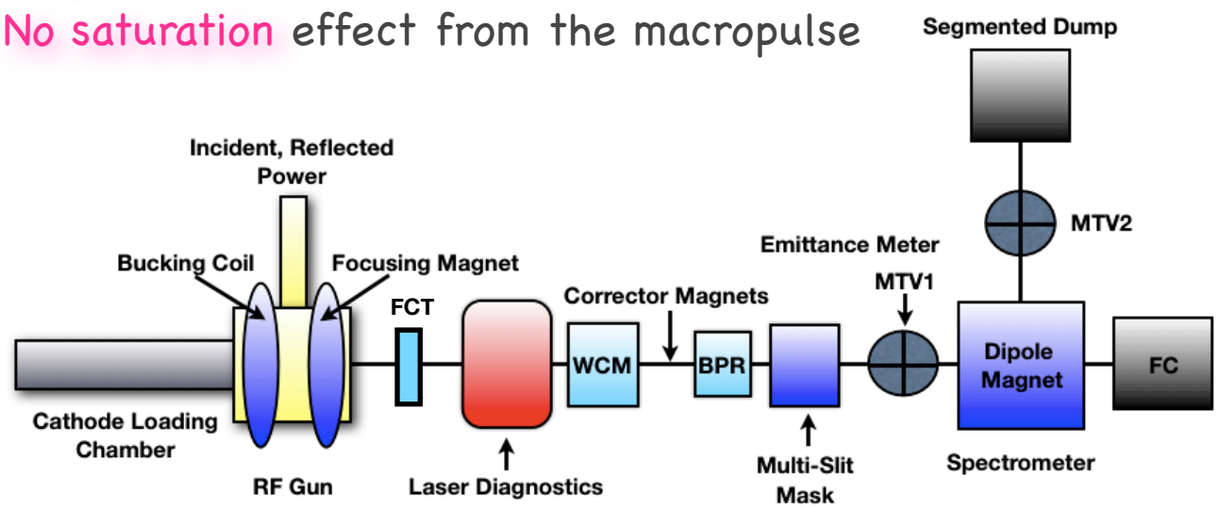

- Charge measurement on the FCT (fast current transformer) with respect to the RF phase.
- Measurements were repeated at two different laser energies and also for beam loading and on-crest regimes.

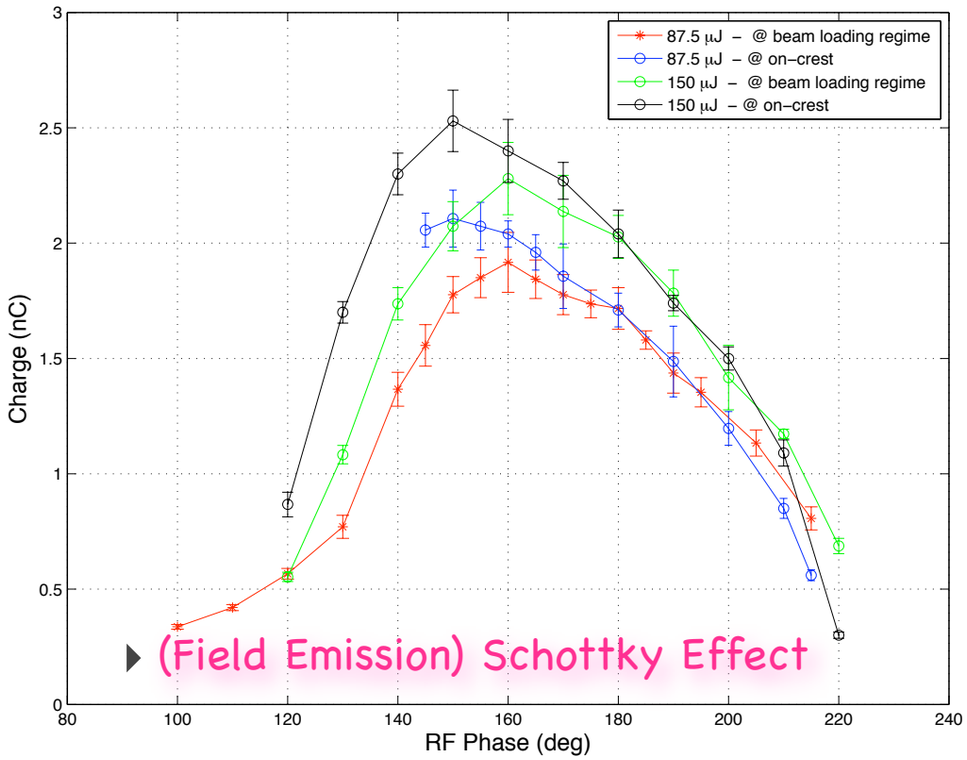

- (Field Emission) Schottky Effect

Time-Resolved Measurements

In 2010,

the main focus of the measurements is **the stability along the pulse train** of the size, energy, energy spread and the emittance of the beam as well as the high charge production. **The previous results - CLIC Note 809**

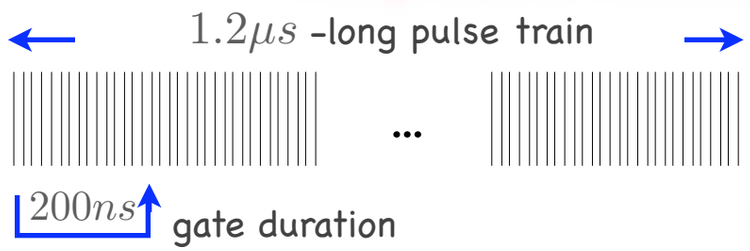

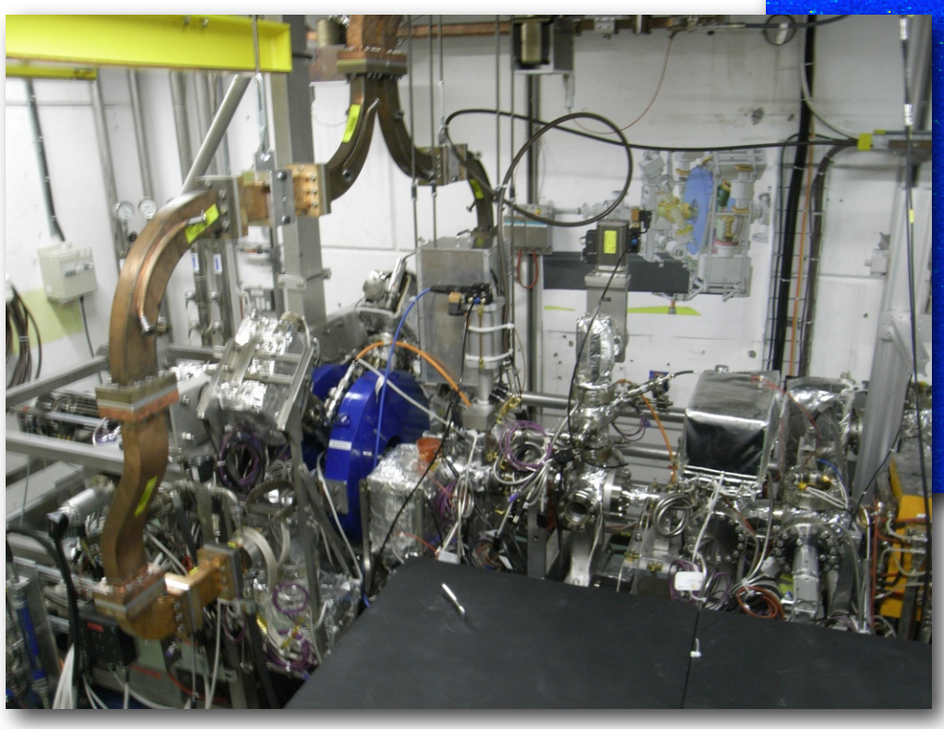

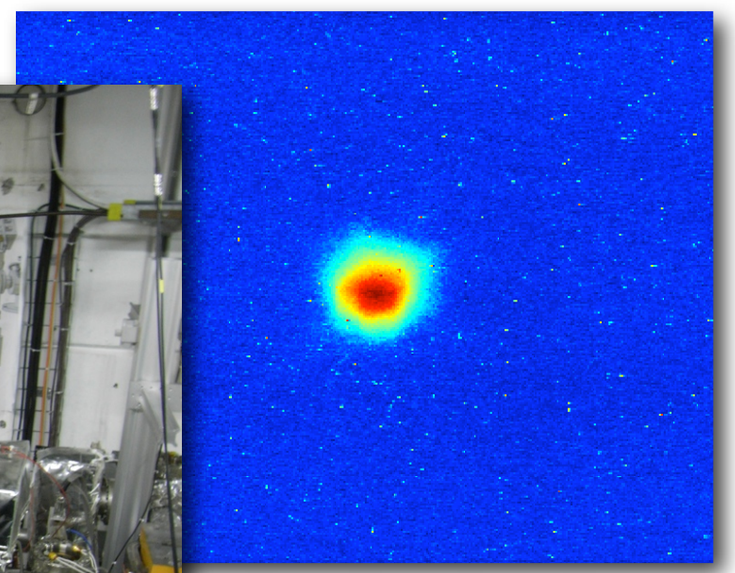

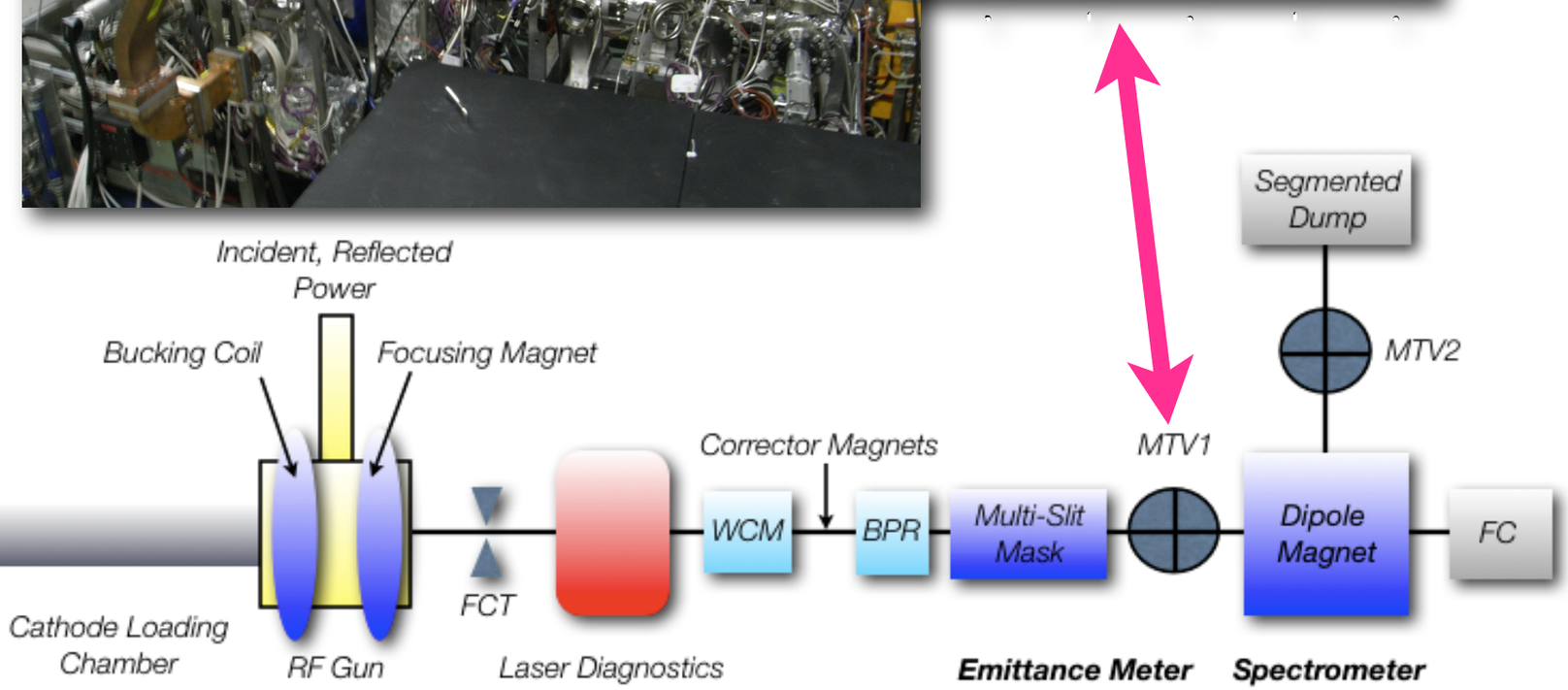

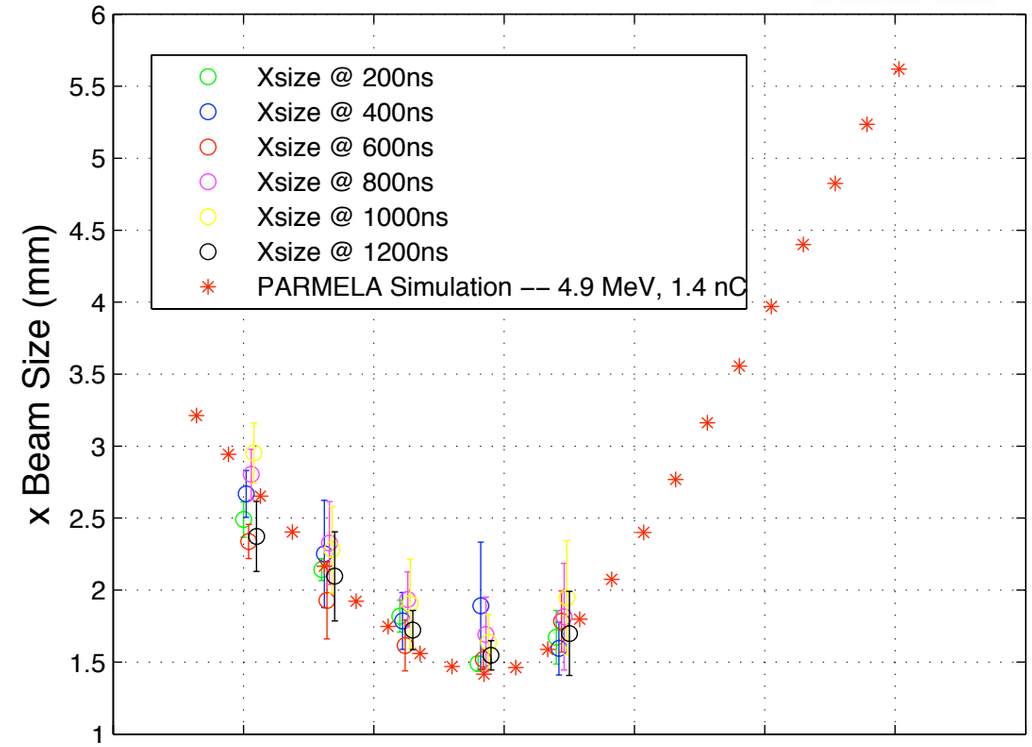

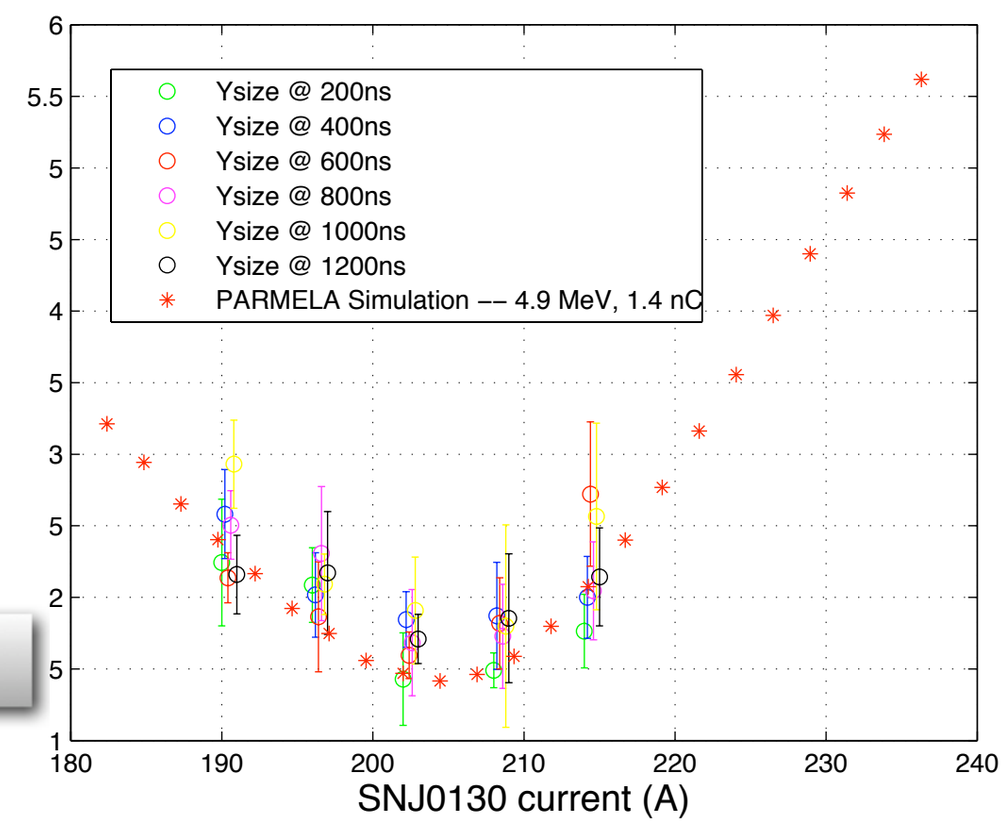

Time-Resolved Measurements

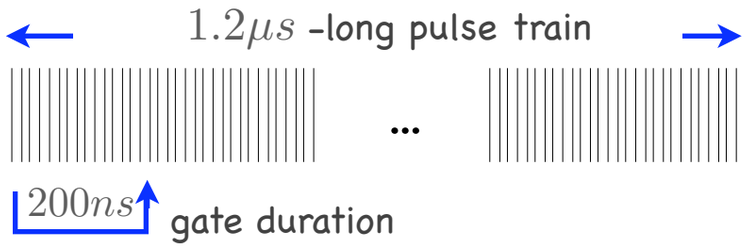

March 2010

7 mm mrad @ 1.4 nC

(03 March 2010) Measurements along the Pulse Train of $1.2\mu s$

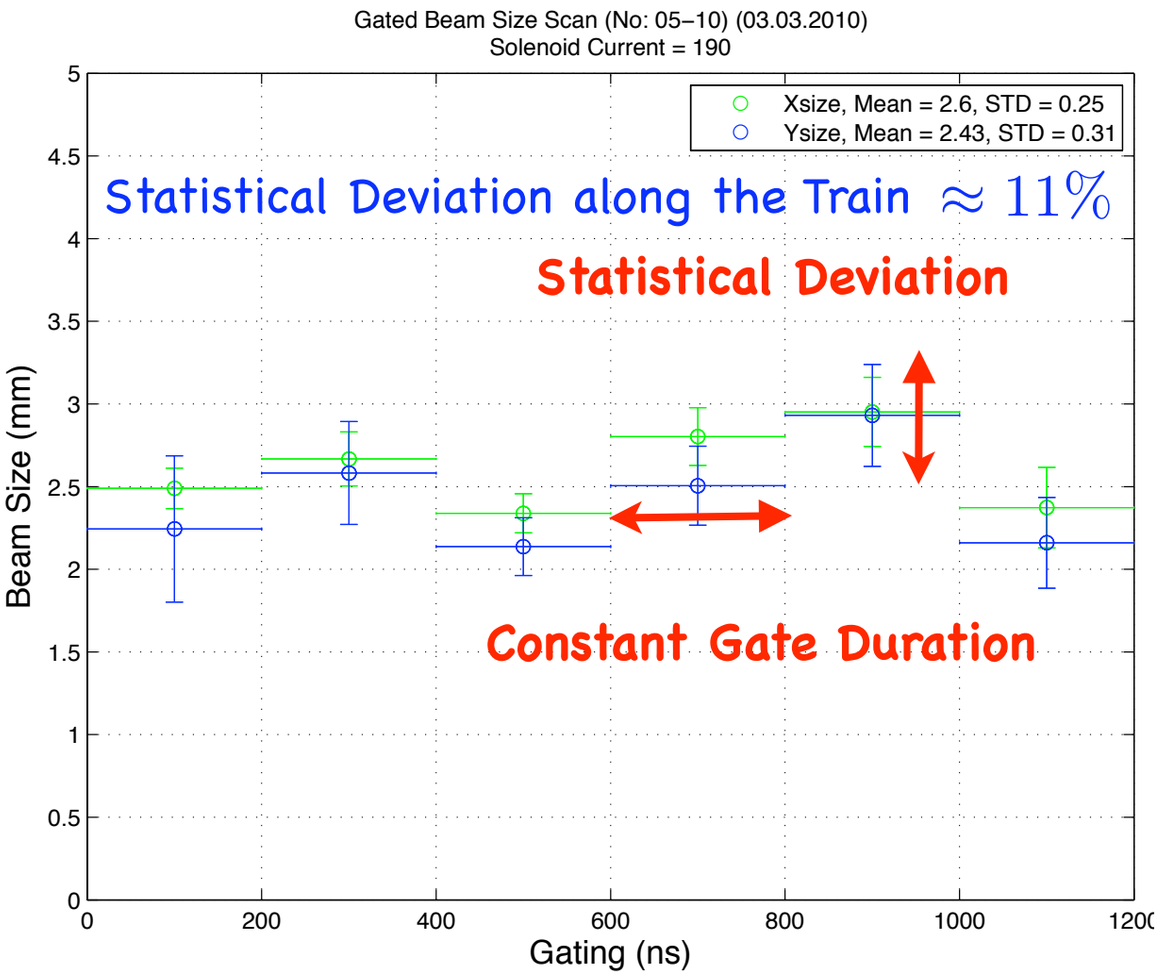

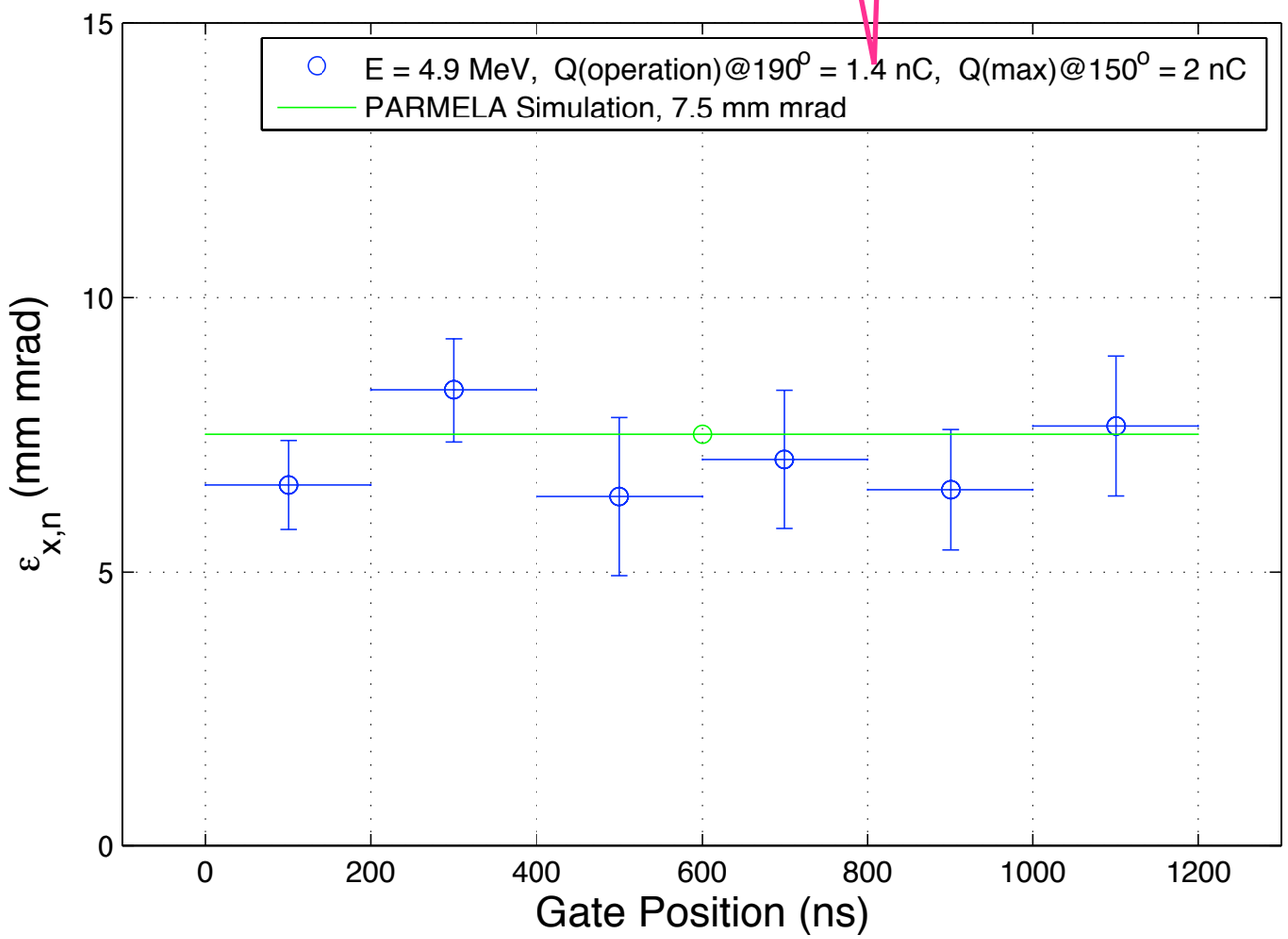

- Each data point represents the average of **10** subsequent measurements at the same gate position.
- Average emittance along the pulse train has been measured as **7.1 mm mrad**.
- The average fluctuation along the pulse train has been measured as **1.13 mm mrad (16%)**.

Time-Resolved Measurements

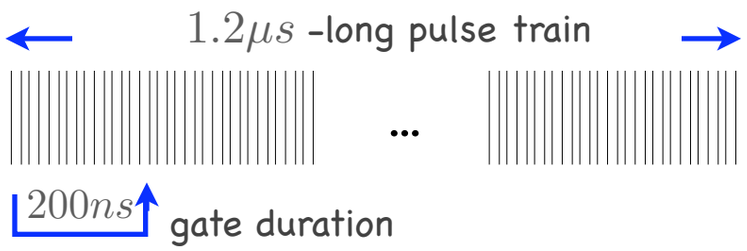

$$Q_{max}[nC] = \frac{E_{acc}[MV/m]\sigma_x^2}{18}$$

Larger Spot Size
Larger Charge & Emittance

14 mm mrad @ 1.7 nC
Larger spot size ~1 mm (sigma)

June 2010

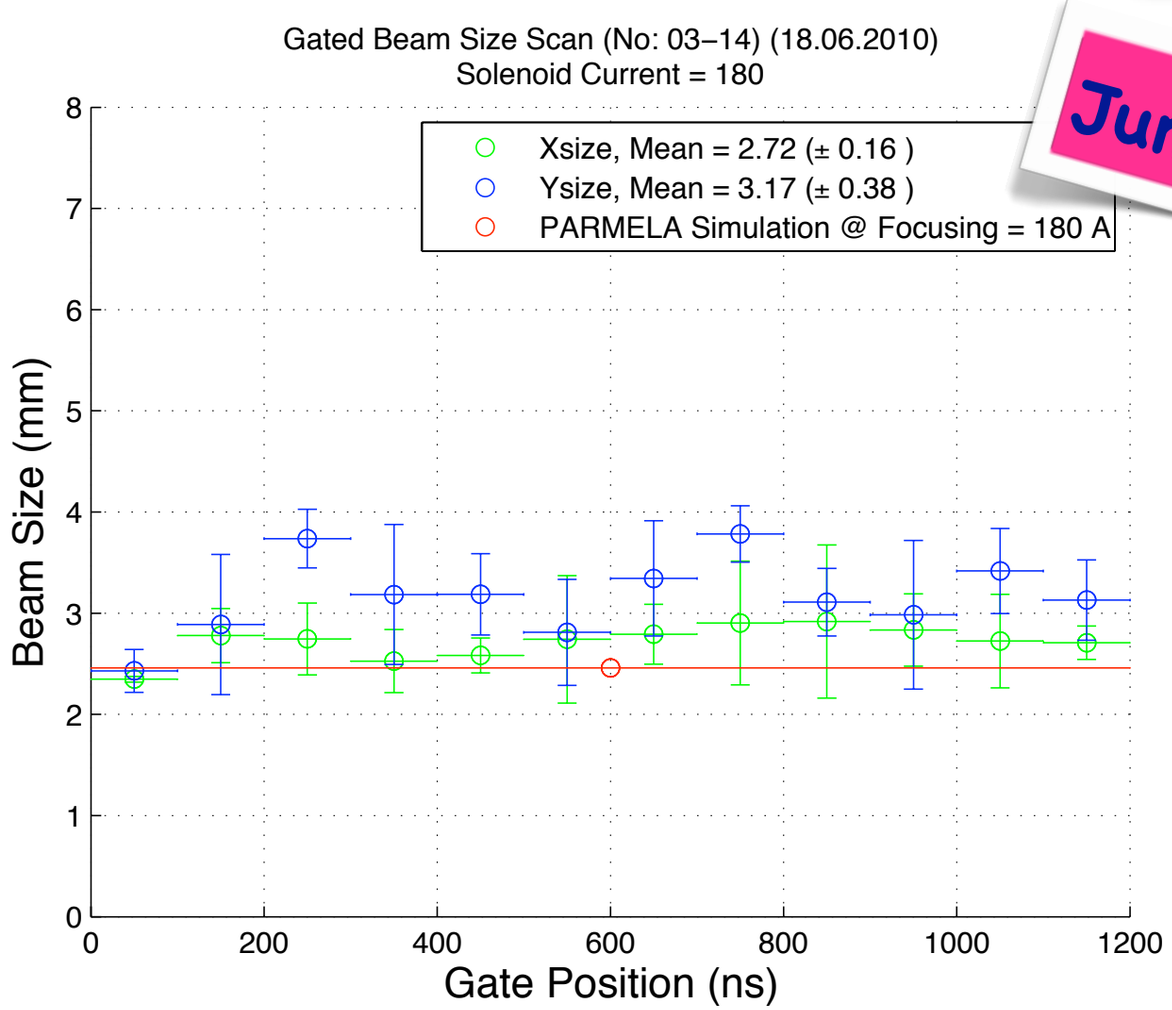

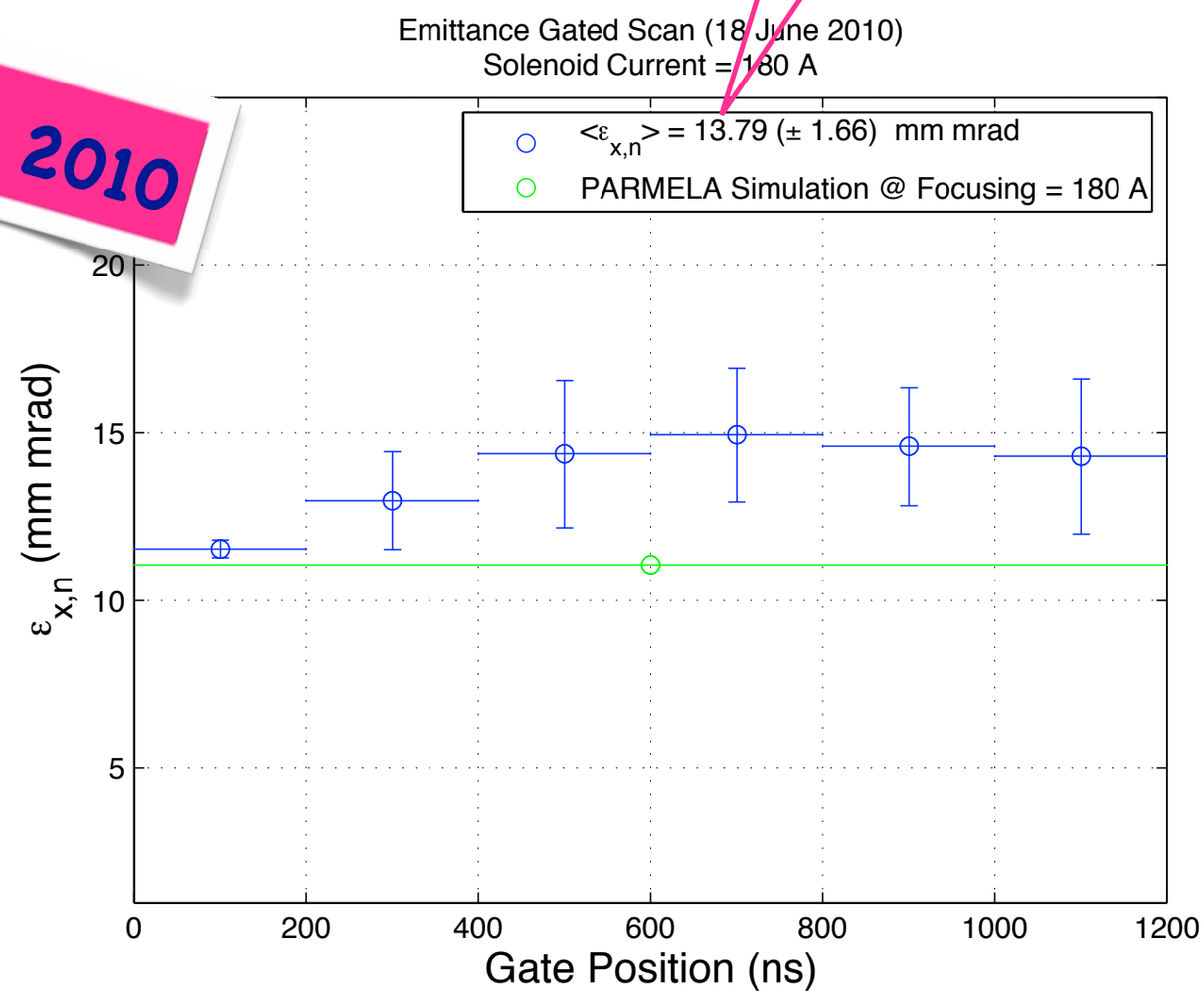

- Each data point represents the average of 10 subsequent measurements at the same gate position.
- The average statistical fluctuation of the beam size along the pulse train - (x)0.16/(y)0.38 mm (6% / 12%).
- Average emittance along the pulse train - 14 mm mrad.
- The av. statistical fluctuation of the transverse normalized emittance along the pulse train - 1.66 mm mrad (12%).

Time-Resolved Measurements

For the summary of the previous results and design of the segmented dump - CTF3 Note 099

http://accelconf.web.cern.ch/accelconf/IPAC10/papers/mope056.pdf - IPAC10 Paper

Feb-March 2010

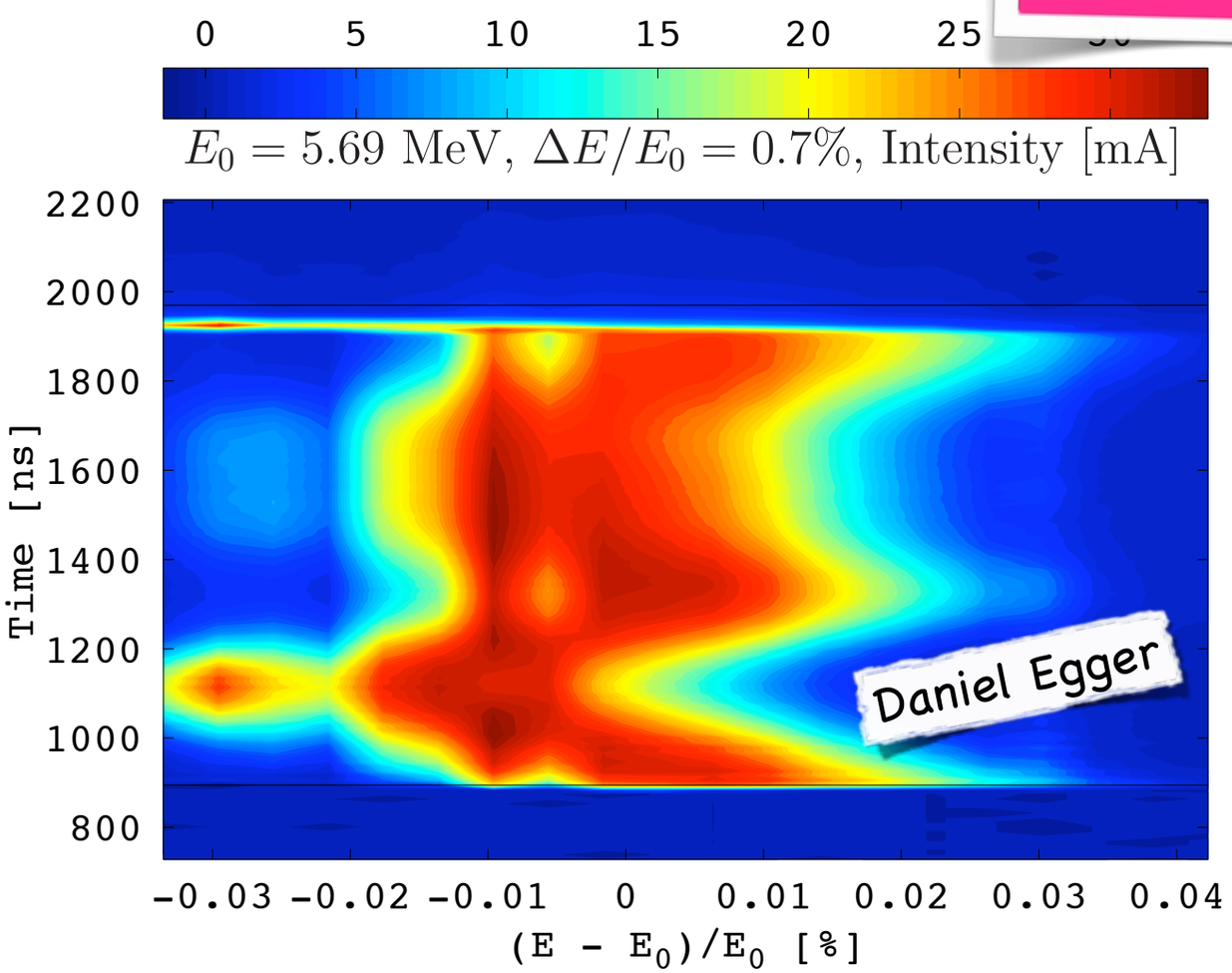

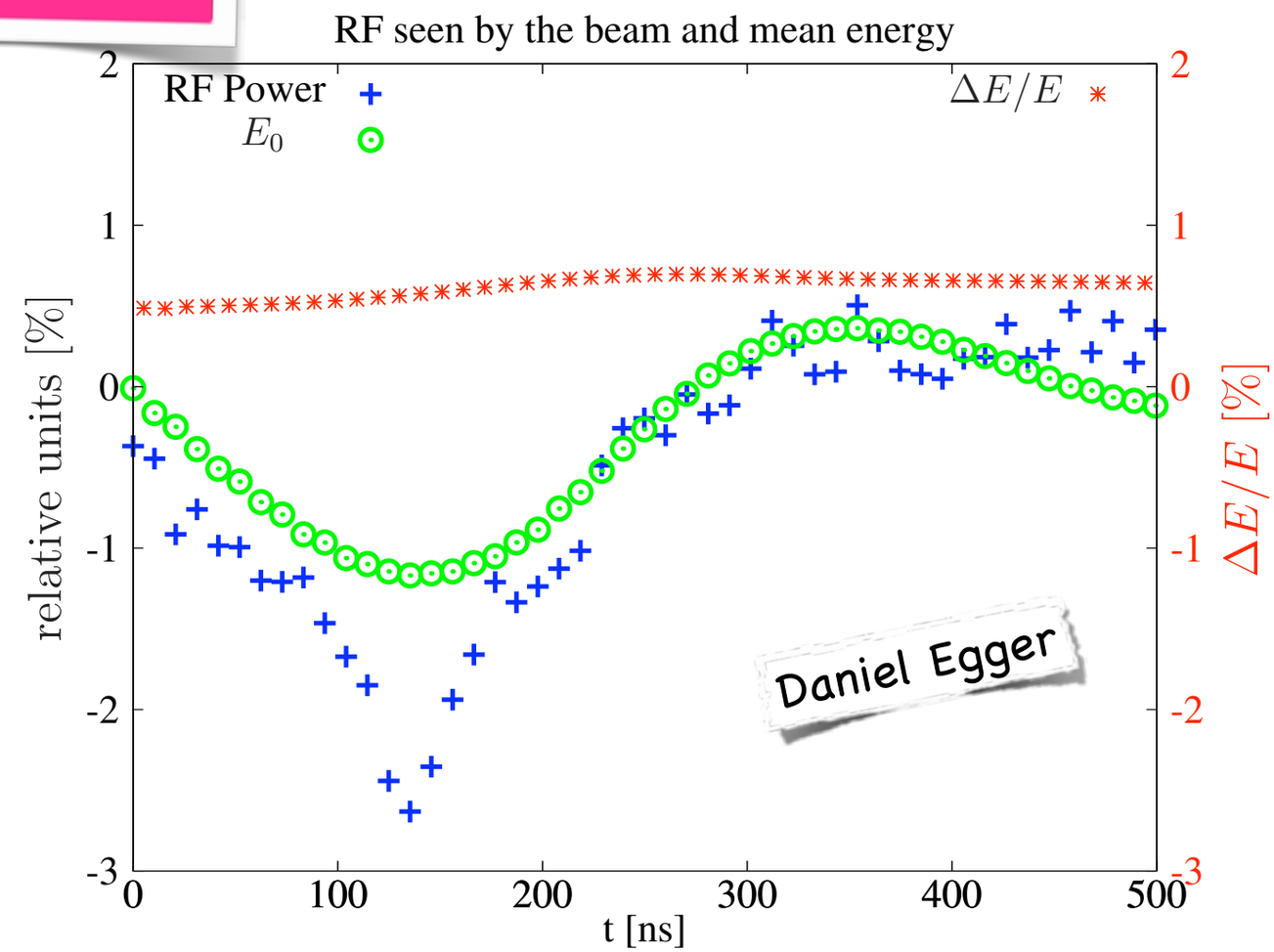

Measured energy spread

- Segmented dump: $\Delta E/E = 0.7\% \pm 0.16\%$ at 1σ
- Energy variations along pulse train correlate well to power fluctuations from RF
- Time resolved energy spread is stable

Anne Dabrowski's Talk

http://ilcagenda.linearcollider.org/materialDisplay.pycontribId=372&sessionId=77&materialId=slides&confId=4507

Measurements at Full train

June 2010

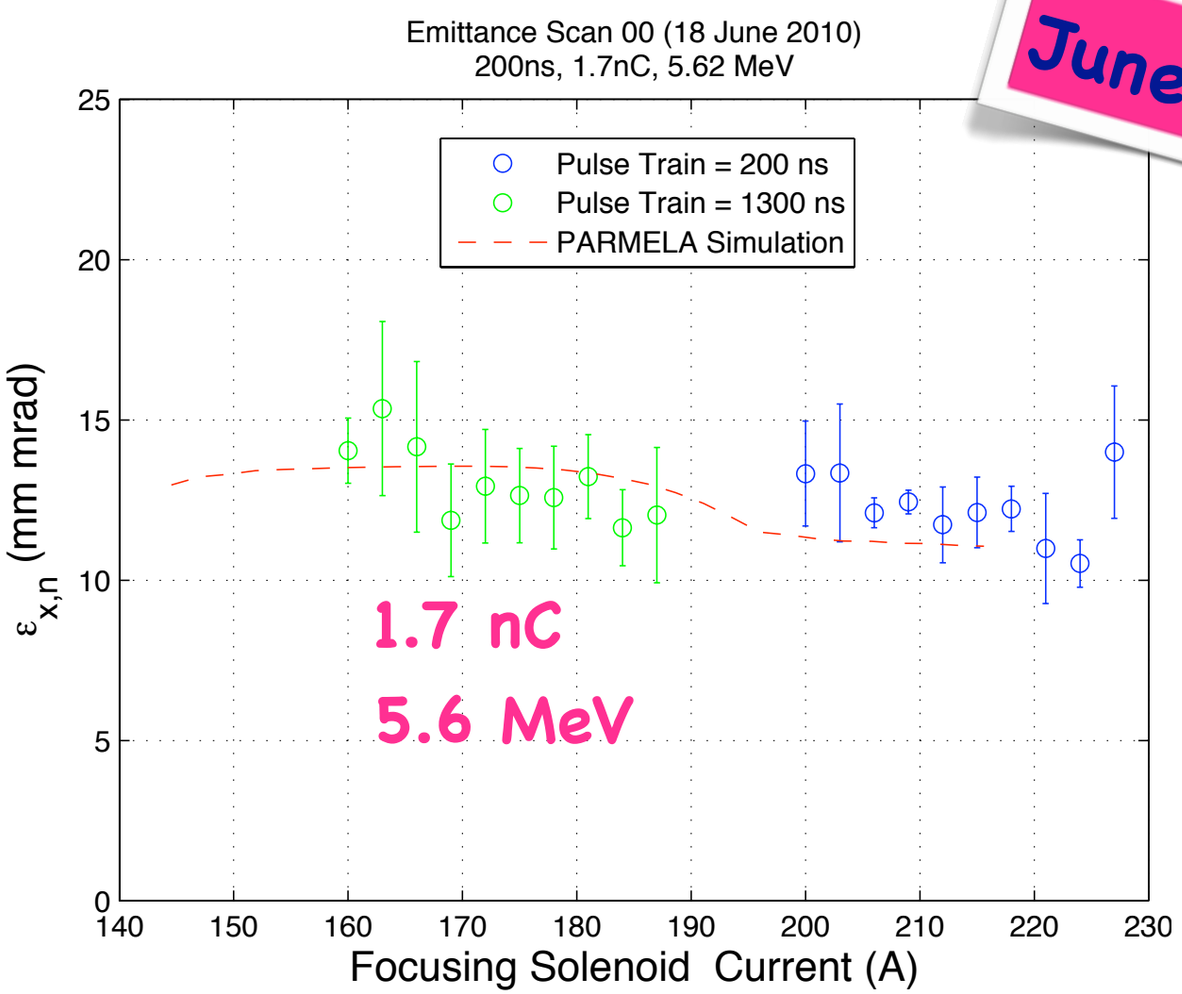

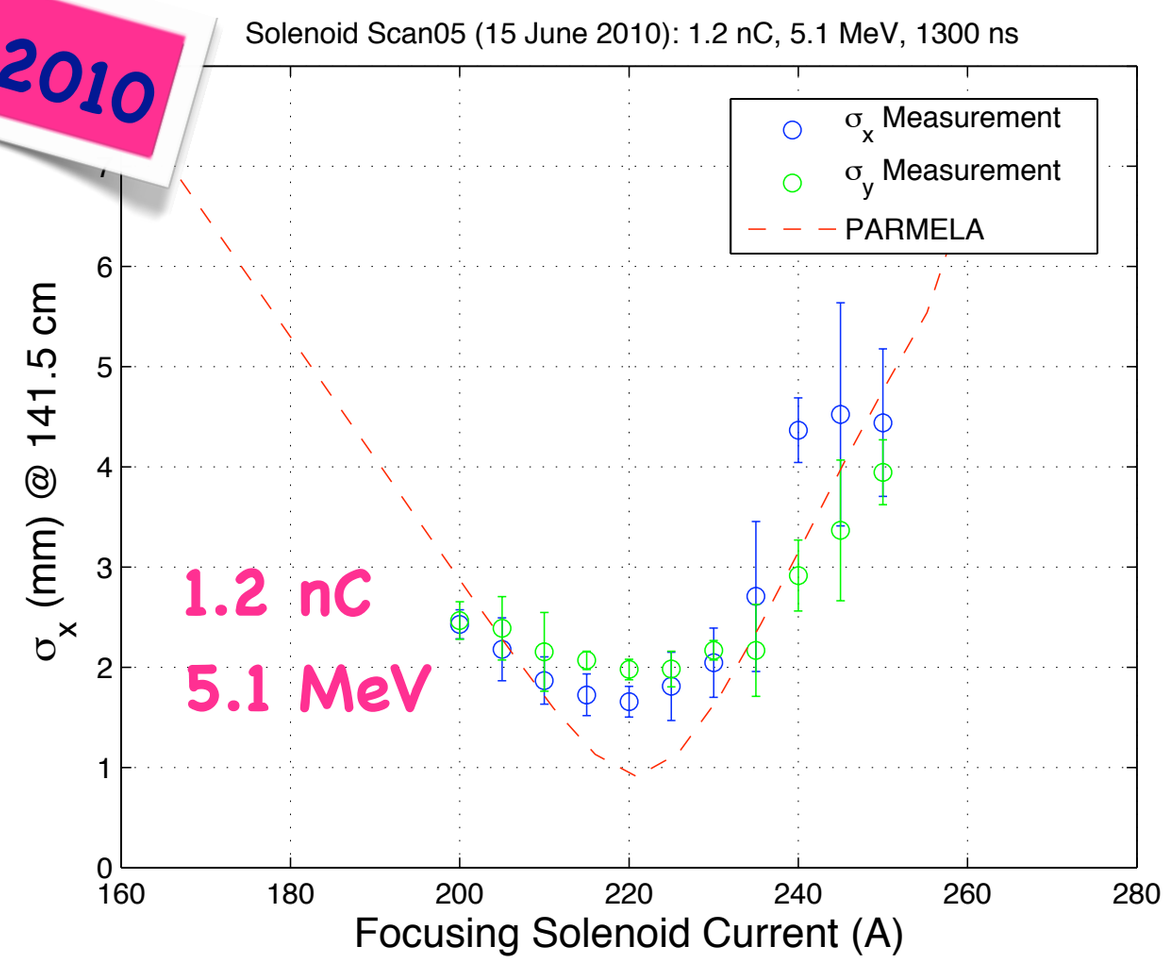

Reminder:

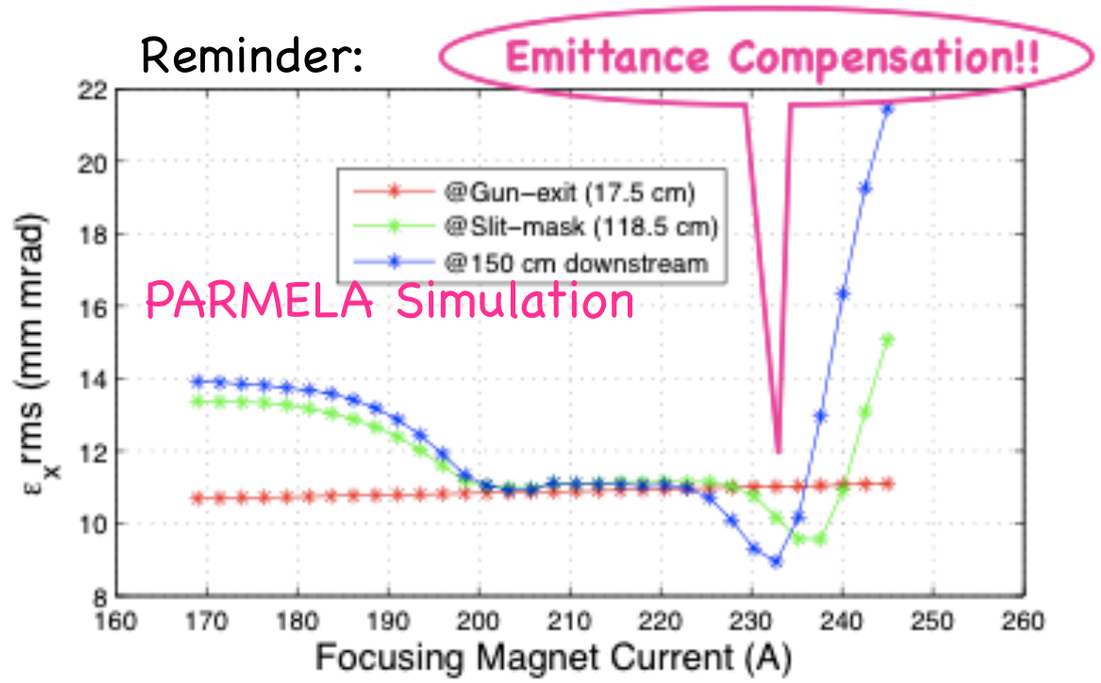

Stability

Measured PHIN stability

Parameter	Value
Laser Stability	
Intensity (%)	1.66
Spot Size (mm) (x / y)	0.064 / 0.053
Pulse Length (ps)	0.41 (6%)
RF Stability	
Phase (^{o} per kV)	3
Amplitude (‰)	1

DB Tolerances

A. Aksoy's Talk

PHIN Spec < 0.25%

RF power error	(%)	0.2
Beam current error	(%)	0.2
RF phase error	(deg)	0.05
Incoming beam phase error	(deg)	0.1
DB Bunch Length	(%)	1
DB Energy	(%)	1

Still an open issue... No reason to be pessimistic.

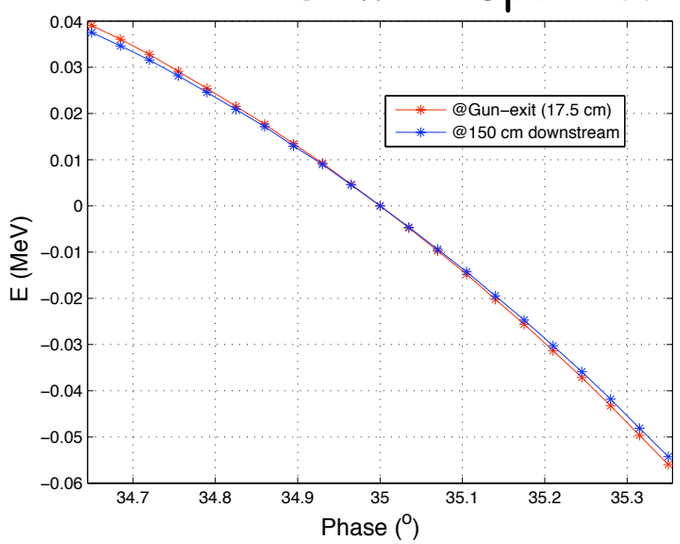

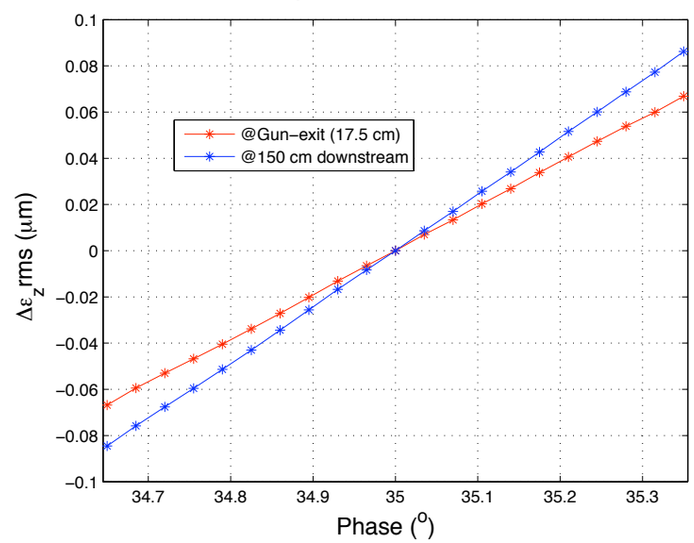

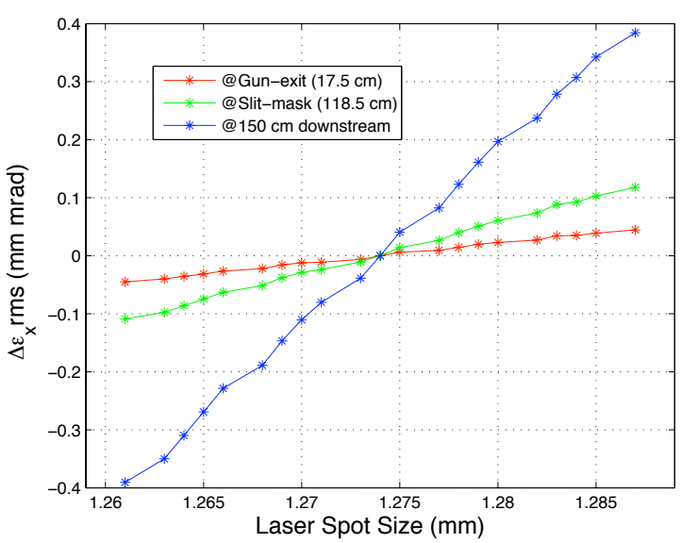

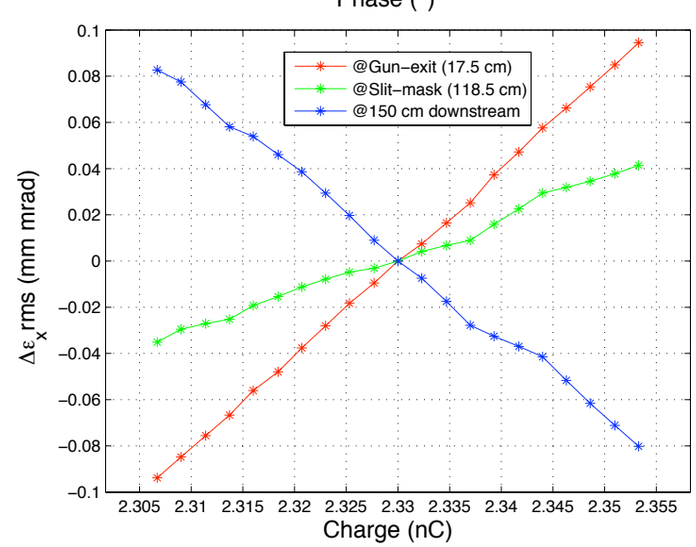

PARMELA Simulations

The effect of the ±1% laser spot size variation on the beam parameters.

Parameter	Variation (%)
Beam Size	±2
Transverse Normalized Emittance	±0.3

The effect of the ±1% phase variation on the beam parameters.

Parameter	Variation (%)
Energy	+0.67 / −0.98
Energy Spread	±3.6
Bunch Length	±0.63
Longitudinal Normalized Emittance	±0.9

The effect of the ±1% charge variation on the beam parameters.

Parameter	Variation (%)
Transverse Normalized Emittance	±0.6
Longitudinal Normalized Emittance	±0.8
Energy Spread	±0.9
Bunch Length	±0.3

Conclusions

- The PHIN specifications have been successfully demonstrated in the end of the June 2010 run.

Theoretical limit = 4.5 nC
@85 MV/m and 1 mm laser spot

Parameter	Specification	Achieved
Charge per Bunch (nC)	2.33	4.4
Charge per Train (nC)	4446	>4446
Train Length (ns)	1273	1300
Current (A)	3.5	~3.4
Normalized Emittance (mm mrad)	<25	14
Energy Spread (%)	<1	0.7
Energy (MeV)	5.5	5.5
UV Laser Pulse Energy (nJ)	370	400
Charge Stability (%)	<0.25 rms	0.8-2.4
Cathode	Cs_2Te	Cs_2Te
Quantum Efficiency (%)	3	18 (peak)
RF Gradient (MV/m)	85	85
RF Frequency (GHz)	2.99855	2.99855
Micropulse Repetition Rate (GHz)	1.5	1.5
Macropulse Repetition Rate (Hz)	1-5	1-5

Conclusions

- The PHIN specifications have been successfully demonstrated in the end of the June 2010 run.

Theoretical limit = 4.5 nC
@85 MV/m and 1 mm laser spot

Parameter	Specification	Achieved
Charge per Bunch (nC)	2.33	4.4
Charge per Train (nC)	4446	>4446
Train Length (ns)	1273	1300
Current (A)	3.5	~3.4
Normalized Emittance (mm mrad)	<25	14
Energy Spread (%)	<1	0.7
Energy (MeV)	5.5	5.5
UV Laser Pulse Energy (nJ)	370	400
Charge Stability (%)	<0.25 rms	0.8-2.4
Cathode	Cs_2Te	Cs_2Te
Quantum Efficiency (%)	3	18 (peak)
RF Gradient (MV/m)	85	85
RF Frequency (GHz)	2.99855	2.99855
Micropulse Repetition Rate (GHz)	1.5	1.5
Macropulse Repetition Rate (Hz)	1-5	1-5

Conclusions

- The PHIN specifications have been successfully demonstrated in the end of the June 2010 run.

Theoretical limit = 4.5 nC
@85 MV/m and 1 mm laser spot

Parameter	Specification	Achieved
Charge per Bunch (nC)	2.33	4.4
Charge per Train (nC)	4446	>4446
Train Length (ns)	1273	1300
Current (A)	3.5	~3.4
Normalized Emittance (mm mrad)	<25	14
Energy Spread (%)	<1	0.7
Energy (MeV)	5.5	5.5
UV Laser Pulse Energy (nJ)	370	400
Charge Stability (%)	<0.25 rms	0.8-2.4
Cathode	Cs_2Te	Cs_2Te
Quantum Efficiency (%)	3	18 (peak)
RF Gradient (MV/m)	85	85
RF Frequency (GHz)	2.99855	2.99855
Micropulse Repetition Rate (GHz)	1.5	1.5
Macropulse Repetition Rate (Hz)	1-5	1-5

Amplitude	Pointing
• Electrical noise/power supplier noise • Pumping diodes • Seed source (osc+preamp) • Phase coding • Pointing (amplification + harmonic stages) • Thermal drifts • Mechanical vibration	• Water cooling system • Air conditioning (temperature variation+ airflow) • Vibration • Airflow in beam transport • Lack of relay imaging

Marta Csatari's Talk

Conclusions

- The PHIN specifications have been successfully demonstrated in the end of the June 2010 run.

Theoretical limit = 4.5 nC
@85 MV/m and 1 mm laser spot

Parameter	Specification	Achieved
Charge per Bunch (nC)	2.33	4.4
Charge per Train (nC)	4446	>4446
Train Length (ns)	1273	1300
Current (A)	3.5	~3.4
Normalized Emittance (mm mrad)	<25	14
Energy Spread (%)	<1	0.7
Energy (MeV)	5.5	5.5
UV Laser Pulse Energy (nJ)	370	400
Charge Stability (%)	<0.25 rms	0.8-2.4
Cathode	Cs_2Te	Cs_2Te
Quantum Efficiency (%)	3	18 (peak)
RF Gradient (MV/m)	85	85
RF Frequency (GHz)	2.99855	2.99855
Micropulse Repetition Rate (GHz)	1.5	1.5
Macropulse Repetition Rate (Hz)	1-5	1-5

Amplitude	Pointing
• Electrical noise/power supplier noise	• Water cooling system
• Pumping diodes	• Air conditioning (temperature variation+ airflow)
• Seed source (osc+preamp)	• Vibration
• Phase coding	• Airflow in beam transport
• Pointing (amplification + harmonic stages)	• Lack of relay imaging
• Thermal drifts	
• Mechanical vibration	

A feedback stabilization system is planned to improve the charge stability.

Marta Csatari's Talk

THANK YOU FOR YOUR ATTENTION...

THANK YOU FOR YOUR ATTENTION...

...and for the 3 years of fun and experience!!

BACKUP – A 1 GHz RF Gun for Drive Beam

3 GHz, 85 MV/m,
8.4 nC

85 MV/m (5.49 MeV @ 35deg)								
Laser Spot Size (cm)		0.1274		0.2548		0.3822		0.5096
I (focusing) (A)		245		230.3		222.9		218.1
Epsx(mm mrad)	@ (GunExit/150)	25.25	32	38.75	33.29	58.9	37.15	52.5	47.71
Epsz(cm)	@ (GunExit/141.5)	0.00013	0.0002	0.00011	0.00023	0.00022	0.00026	0.0014	0.0003
DeltaE(KeV)	@ (GunExit/141.5)	0.037	0.062	0.031	0.053	0.036	0.055	0.13	0.052
sigmaz(ps)	@ (GunExit/141.5)	2.04	2.33	2.3	2.57	2.43	2.5	4.33	2.71
factor for cm -> ps			33 1/3