Alternative assembly option of ILD

Y.Sugimoto

2010/10/18

ILD Integration Meeting @CERN

ILC in mountain regions

- Design study of accelerator and conventional facilities (CF) in mountain regions is one of the major activities in GDE
- Design of the detector hall in mountain regions should be done by the detector community in cooperation with GDE CF group
- We (T.Sanuki, Y.Makida, M.Miyahara, Y.Sugimoto, T.Tauchi, H.Yamaoka, M.Yoshioka, A.Sugiyama) are now involved in this activity (since Apr.2010)

An example of Asian mountain site

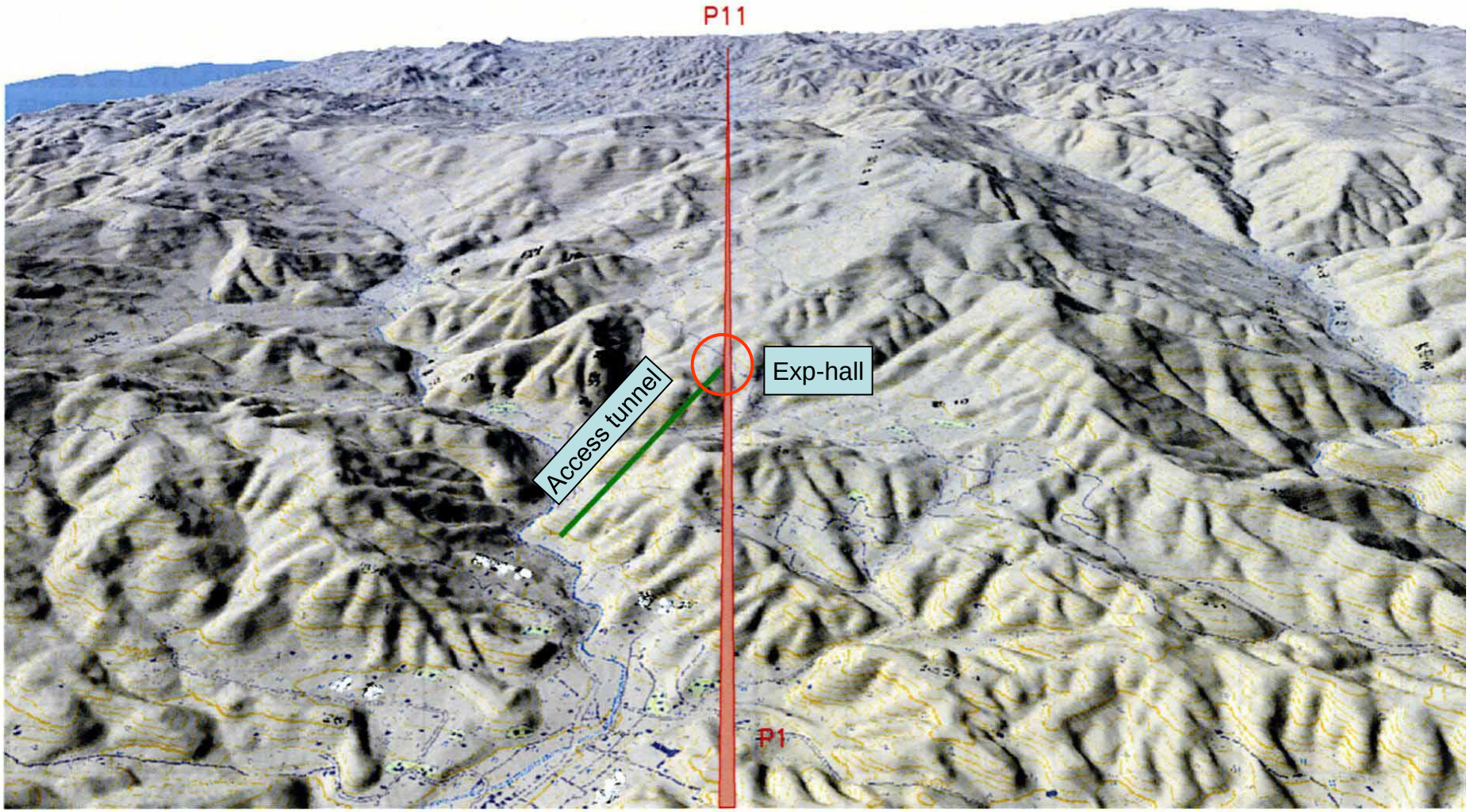

Exp-hall in mountain regions

- For CMS-style assembly using big vertical shafts, depth of IP should be d≤100m
- This requirement restricts the location of IP in mountain regions
- By removing the constraint of d≤100m, more flexible choice of IP location and accelerator layout can be made
  - Selecting the location of the cavern with better geology would reduce the cost and the construction period

- **Exp-hall without vertical shafts** may be more suitable for some candidate sites in mountain region
- In that case, access tunnels are used to carry detector and accelerator components into detector cavern or accelerator tunnel
- We have just started to study on the exp-hall design and detector assembly method without vertical shafts as an option

(n.b. It does not mean that the CMS-style assembly using vertical shafts is excluded for all candidate sites in mountain regions)

A possible design of exp-hall

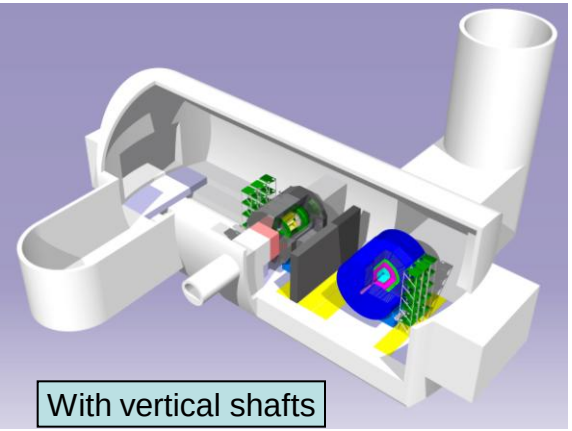

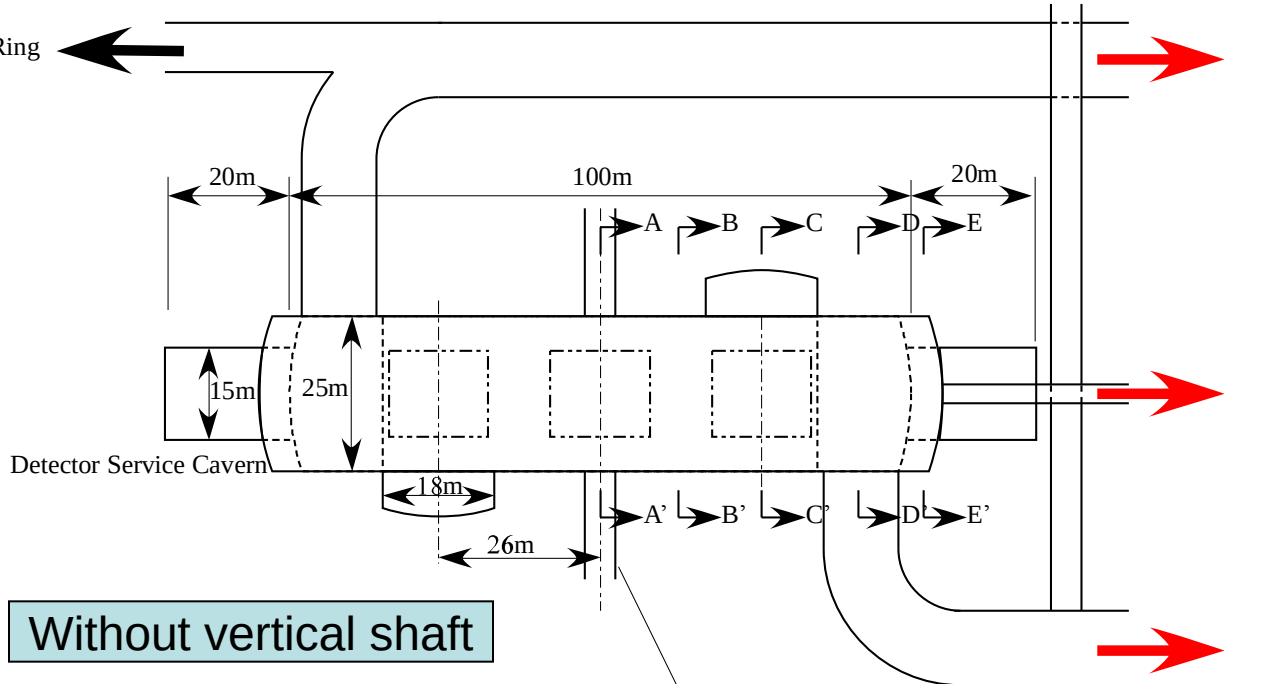

Without vertical shaft

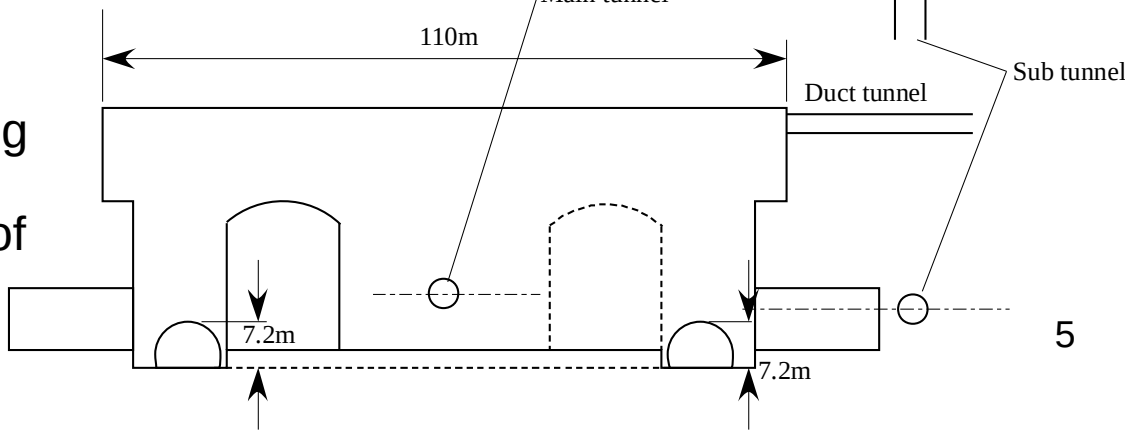

- Bottom access tunnels at both ends (for 2 detectors)
- Small alcoves at garage positions for detector opening
- Top (duct) tunnel is bored first, and then the arch part of the cavern is excavated

Detector assembly

- Assembly hall locates at the entrance of access tunnel where wide flat surface and wide roads exist
- Detector would be assembled to relatively small pieces (<100~200 ton) at the assembly hall, carried to the cavern through the access tunnel, and integrated to the large detector inside the cavern (Similar to “modified CMS style assembly” which was proposed by GLD group in 2006)
- Barrel iron structure would be divided in ϕ (and R) direction, rather than Z direction
- Solenoid coil would be wound on surface for 5 modules, and these modules are connected into one solenoid in the cavern
- Detailed study on the assembly method is necessary

Comments

- Comments at DESY ILD WS in July
  - Construction period?
  - Space for assembly of the solenoid and iron yoke?
- Comments by SiD at CFS WS @SLAC in Aug
  - No problem!

Construction period

- Construction period is one of the most controversial issues for the shaft-less exp-hall
- Construction period of an access tunnel (L~1km) would be similar to that of a vertical shaft (ϕ=18m, d~100m)
- Non-CMS style assembly was once proposed for GLD as “modified CMS assembly” which can be done within the same time period as the CMS style assembly
- Assembly of the iron yoke structure and the solenoid in the cavern would take ~1y, but it does not mean that non-CMS style assembly (new modified CMS-style assembly) takes 1y more than CMS style assembly

CMS Style

ID		Name	Duration
1		Project approval	0d
2		**Beam lines construction**	**1955d**
3		Cavern/Tunnel	260w
4		Beamline harware install	105w
5		Start of beam commissioning	0d
6		BDS pre-commissioning	26w
7		BDS ready for detectors	0d
8		**Detector construction**	**1485d**
9		Detector assembly	271w
10		Detector underground commissic	26w
11		Detector ready for BDS	0d
12		**Final assembly & commissioning**	**85d**
13		Detector moved to IP	4w
14		Final beam commissioning	13w
15		Ready for physics run	0d

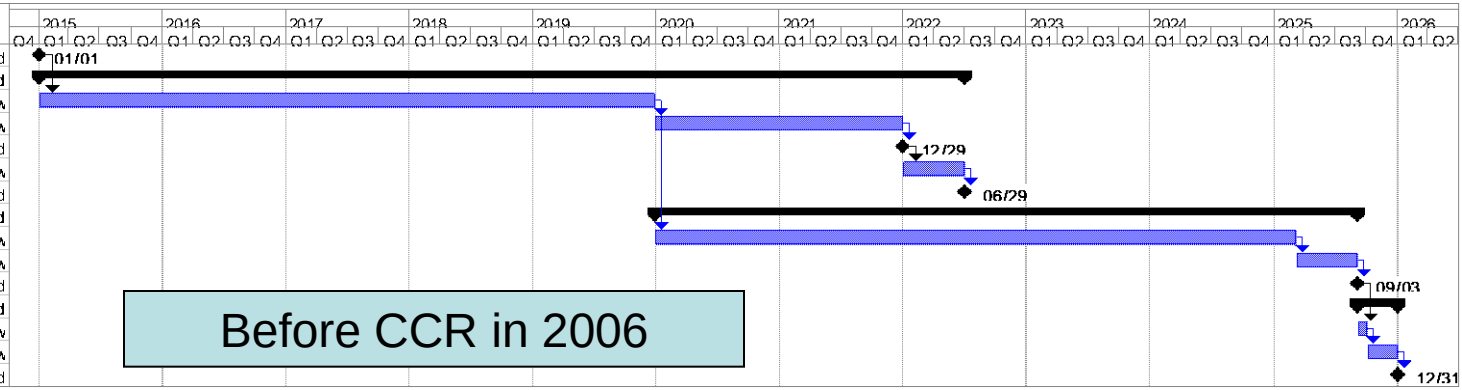

Before CCR in 2006

ID		Name	Duration
1		Project approval	0d
2		**Beam lines construction**	**1955d**
3		Cavern/Tunnel	260w
4		Beamline harware install	105w
5		Start of beam commissioning	0d
6		BDS pre-commissioning	26w
7		BDS ready for detectors	0d
8		**Detector construction**	**1955d**
9		Surface assembly hall	120w
10		Detector assembly	245w
11		Detector surface commissioning	26w
12		Detector ready for BDS	0d
13		**Final assembly & commissioning**	**130d**
14		Detector underground assembly	13w
15		Final beam commissioning	13w
16		Ready for physics run	0d

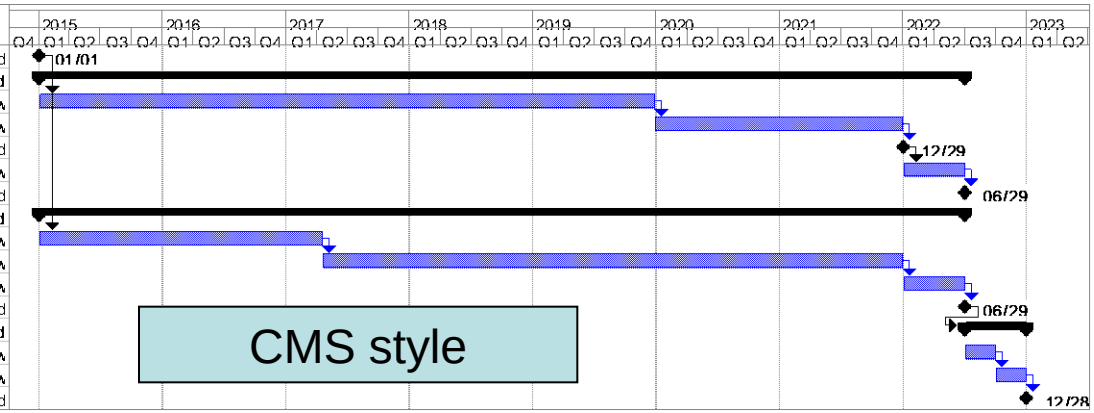

CMS style

http://www-project.slac.stanford.edu/ilc/acceldev/beamdelivery/rdr/docs/CCR_surface/BDS_schedule.pdf

Modified CMS style

ID	Name	Duration
1	Project approval	0d
2	**Beam lines construction**	**1955d**
3	Cavern/Tunnel	260w
4	Beamline harware install	105w
5	Start of beam commissioning	0d
6	BDS pre-commissioning	26w
7	BDS ready for detectors	0d
8	**Detector construction**	**1955d**
9	Surface assembly hall	120w
10	Detector assembly	245w
11	Detector surface commissioning	26w
12	Detector ready for BDS	0d
13	**Final assembly & commissioning**	**130d**
14	Detector underground assembly	13w
15	Final beam commissioning	13w
16	Ready for physics run	0d

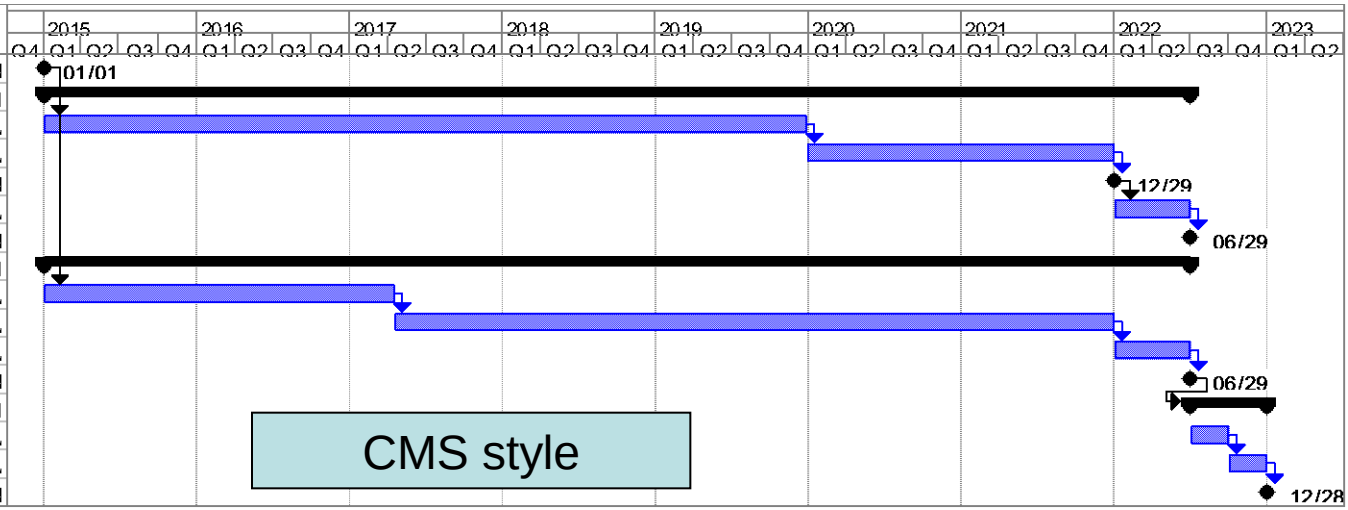

ID	Name	Duration
1	Project approval	0d
2	**Beam lines construction**	**1955d**
3	Cavern/Tunnel	260w
4	Beamline harware install	105w
5	Start of beam commissioning	0d
6	BDS pre-commissioning	26w
7	BDS ready for detectors	0d
8	**Detector construction**	**1690d**
9	Surface assembly hall	120w
10	Detector assembly on surface	218w
11	**Final assembly & commissioning**	**785d**
12	Detector underground assembly	105w
13	Detector pre-commissioning	26w
14	Detector roll-in	4w
15	Support tube, beam pipe, VTX ins	5w
16	Detector check-out	4w
17	Final beam commissioning	13w
18	Ready for physics run	0d

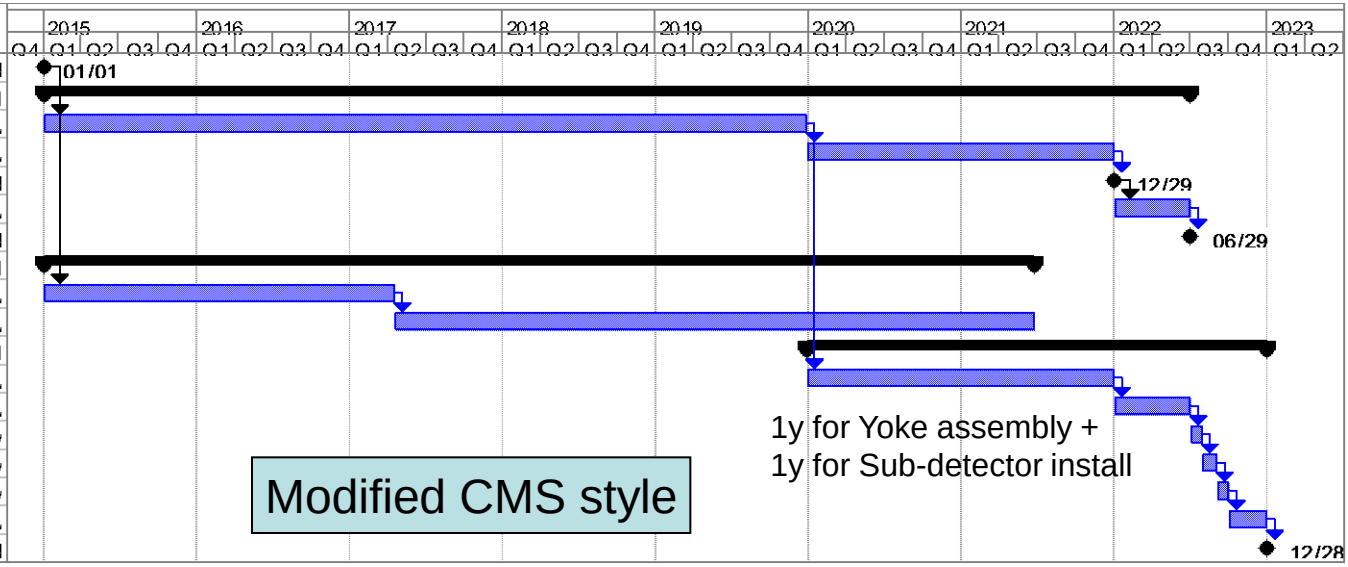

http://www-project.slac.stanford.edu/ilc/acceldev/beamdelivery/rdr/docs/CCR_surface/BDS_schedule.pdf

New modified CMS style

ID		Name	Duration
1		Project approval	0d
2		**Beam lines construction**	**1955d**
3		Cavern/Tunnel	260w
4		Beamline harware install	105w
5		Start of beam commissioning	0d
6		BDS pre-commissioning	26w
7		BDS ready for detectors	0d
8		**Detector construction on surface**	**1850d**
9		Surface assembly hall	120w
10		Detector assembly on surface	250w
11		**Detector assembly in cavern**	**550d**
12		Yoke assembly	53w
13		Solenoid assembly/install/test	66w
14		Field mapping	4w
15		HCAL install/cabling/test	12w
16		ECAL install/cabling/test	12w
17		TPC install/cabling/test	8w
18		SIT/FTD/VTX install/cabling/test	8w
19		**Commissioning**	**235d**
20		Detector pre-commissioning	26w
21		Detector roll-in	4w
22		Detector check-out	4w
23		Final beam commissioning	13w
24		Ready for physics run	0d

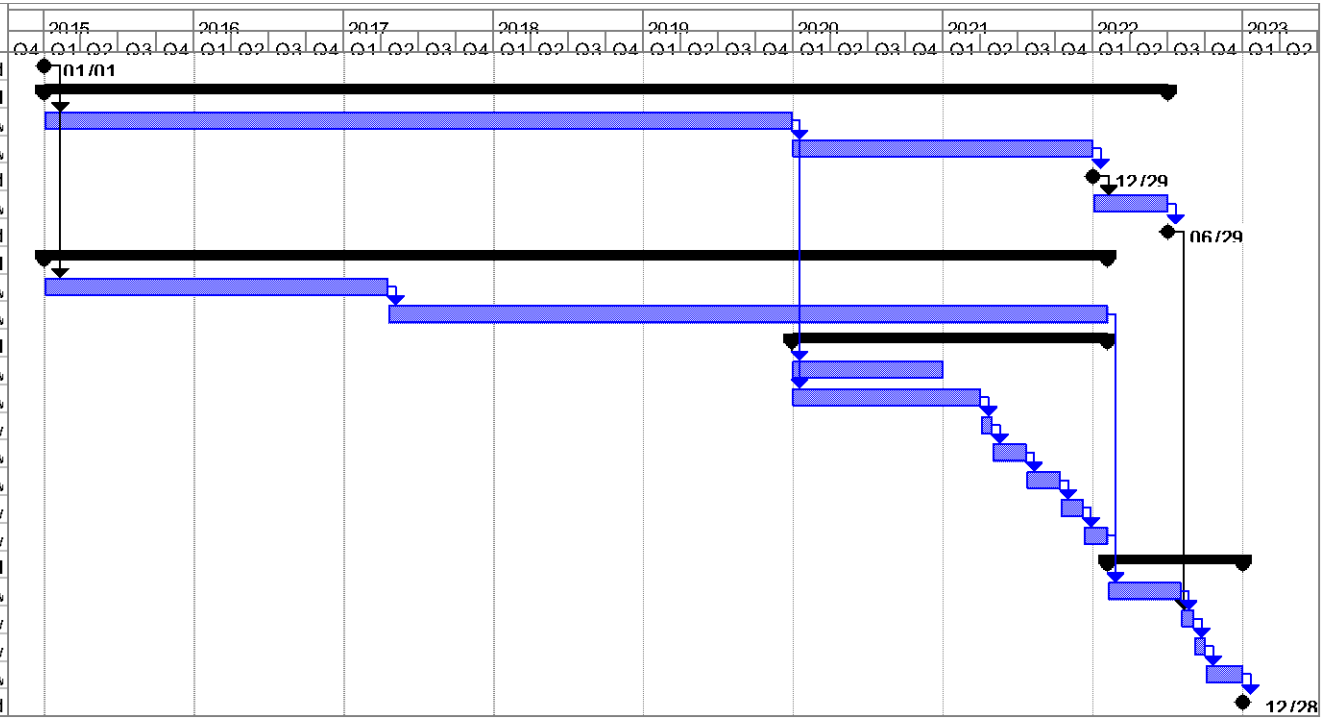

Space for assembly

- We need enough space to assemble the iron yoke and the solenoid in parallel
- Solenoid assembly procedure and installation method have to be studied
- Exp-hall should be equipped with two 200-ton cranes: usually one for each detector, and occasionally two cranes are used together to carry heavy (>200 ton) components

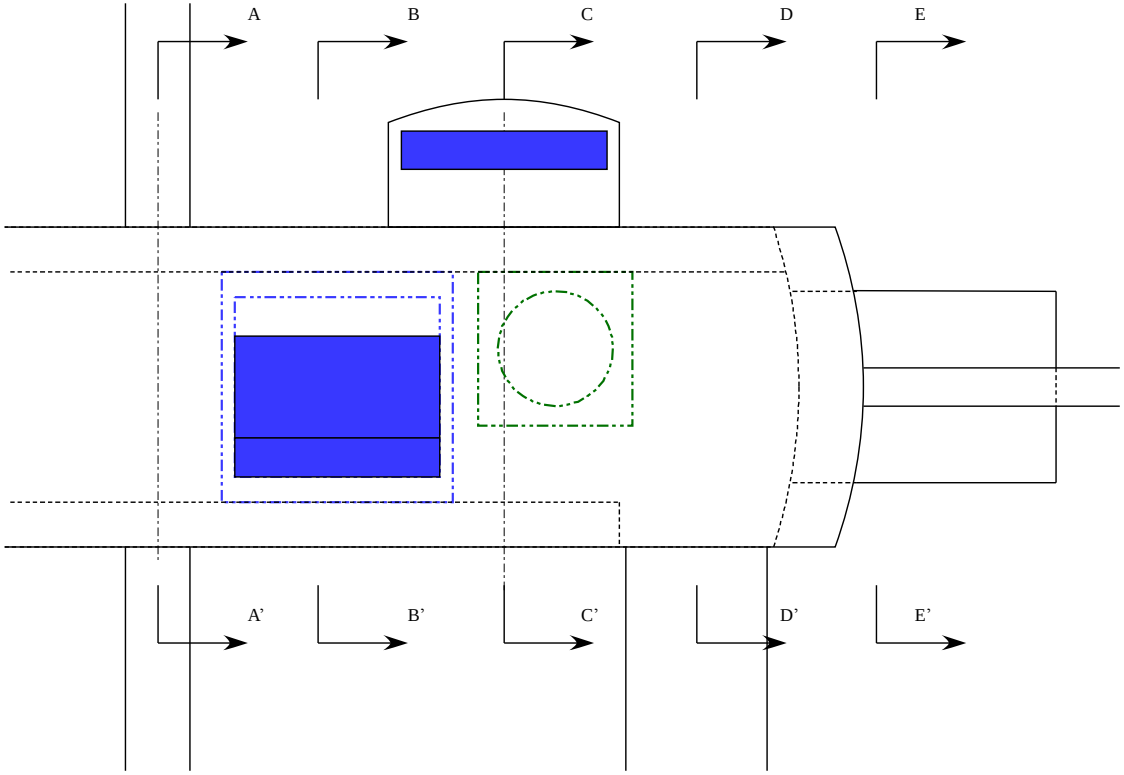

Lower risk option

- Larger (h~11m) access tunnel is an attractive option if the cost is not very high
  - Solenoid is constructed and tested on surface, and carried into the cavern through the access tunnel
  - This option has much less risk

Summary

- Modified CMS style assembly for shaft-less detector hall will not take longer time than CMS-style assembly
- Underground space needed for solenoid assembly is not clear yet
- Solenoid assembly/test on surface is an attractive option if the cost of larger access tunnel is not terribly high
- There are many issues to be studied for the exp-hall optimization; some of them are common to the CMS style assembly:
  - Configuration of He system (He compressor location, piping compatible with push-pull, etc.)
  - Power supply of Solenoid (location, electricity, cooling)
  - Gas ventilation in solenoid quench
  - Power consumption (He compressor, detector, lighting, etc.)
  - Cooling water (detector, dump resister, etc.)
  - Air conditioning (cooling)
  - Drainage of ground water
  - Human safety including escape route
  - Vehicle for heavy (~200 ton) components through the access tunnel
  - …….

Backup slides

A possible design of exp-hall

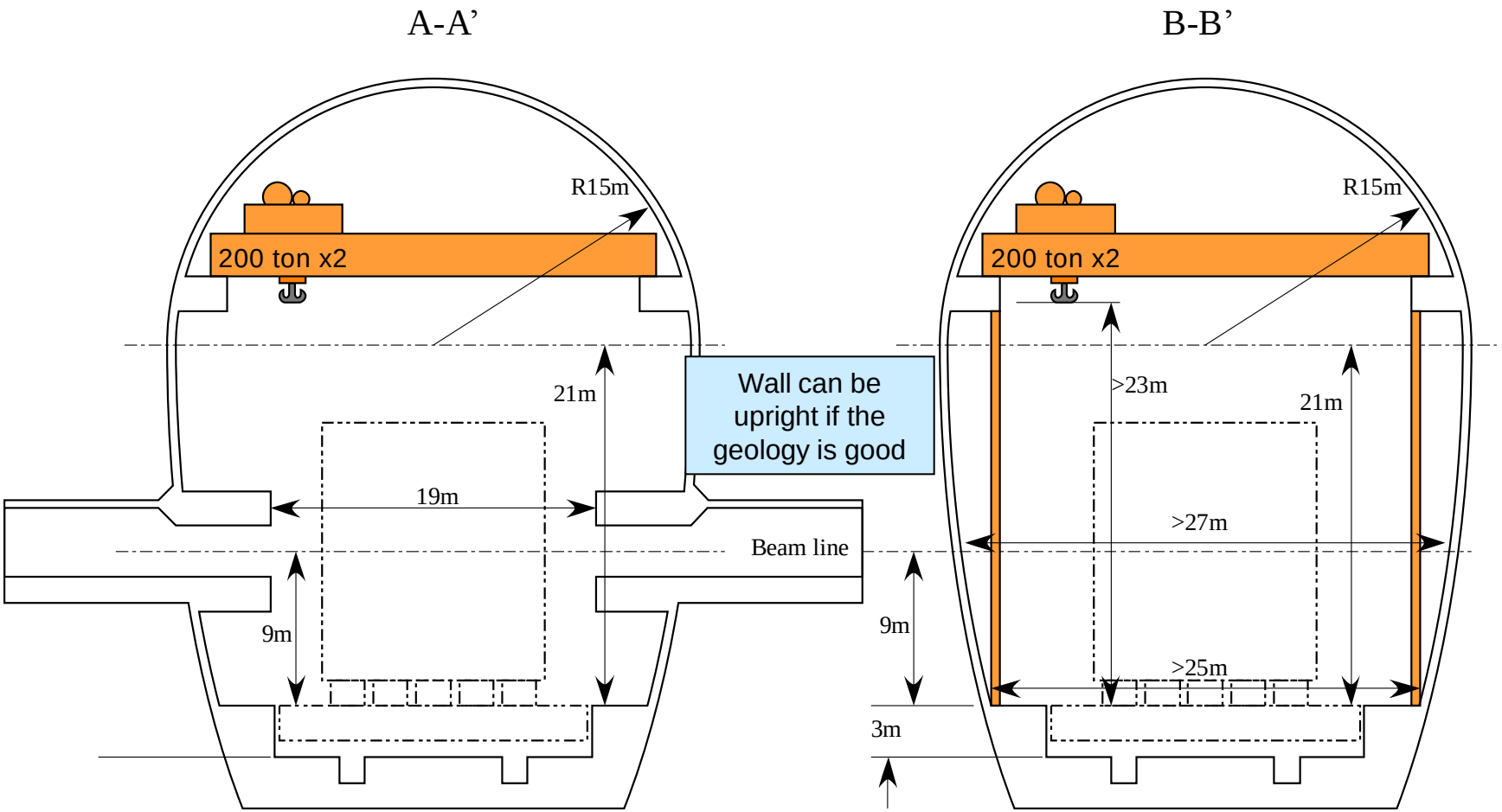

A possible design of exp-hall

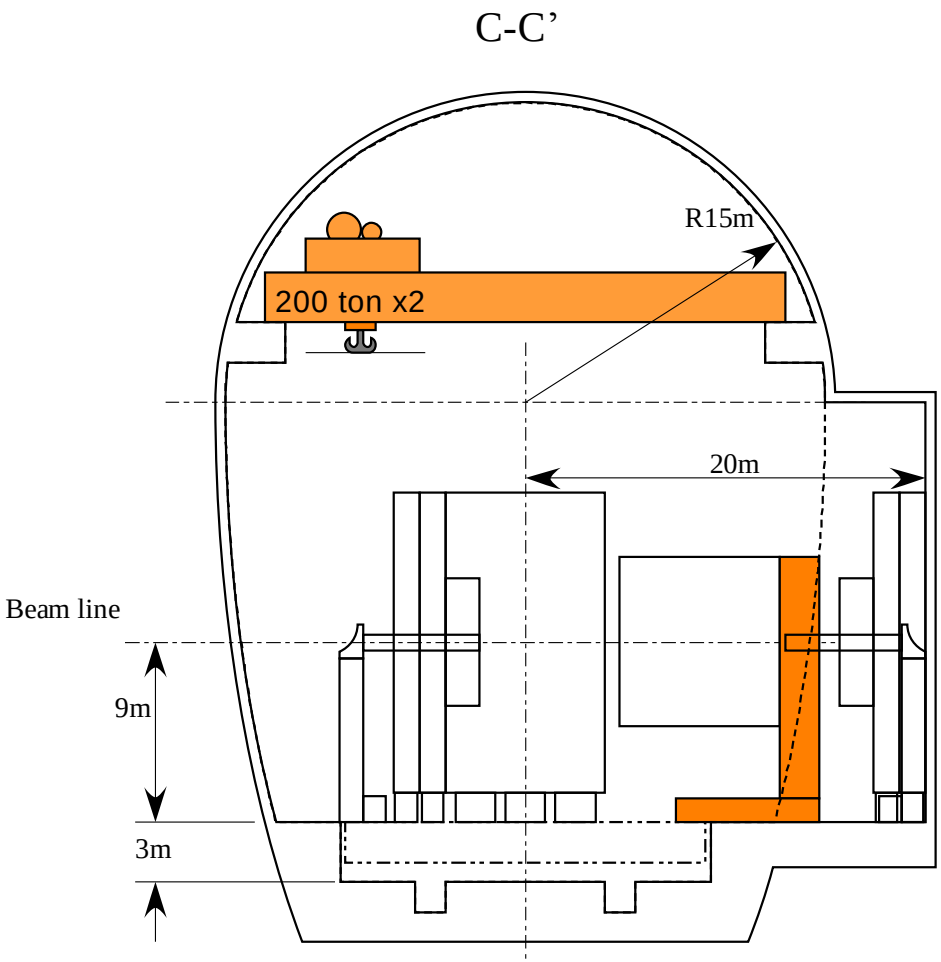

A possible design of exp-hall

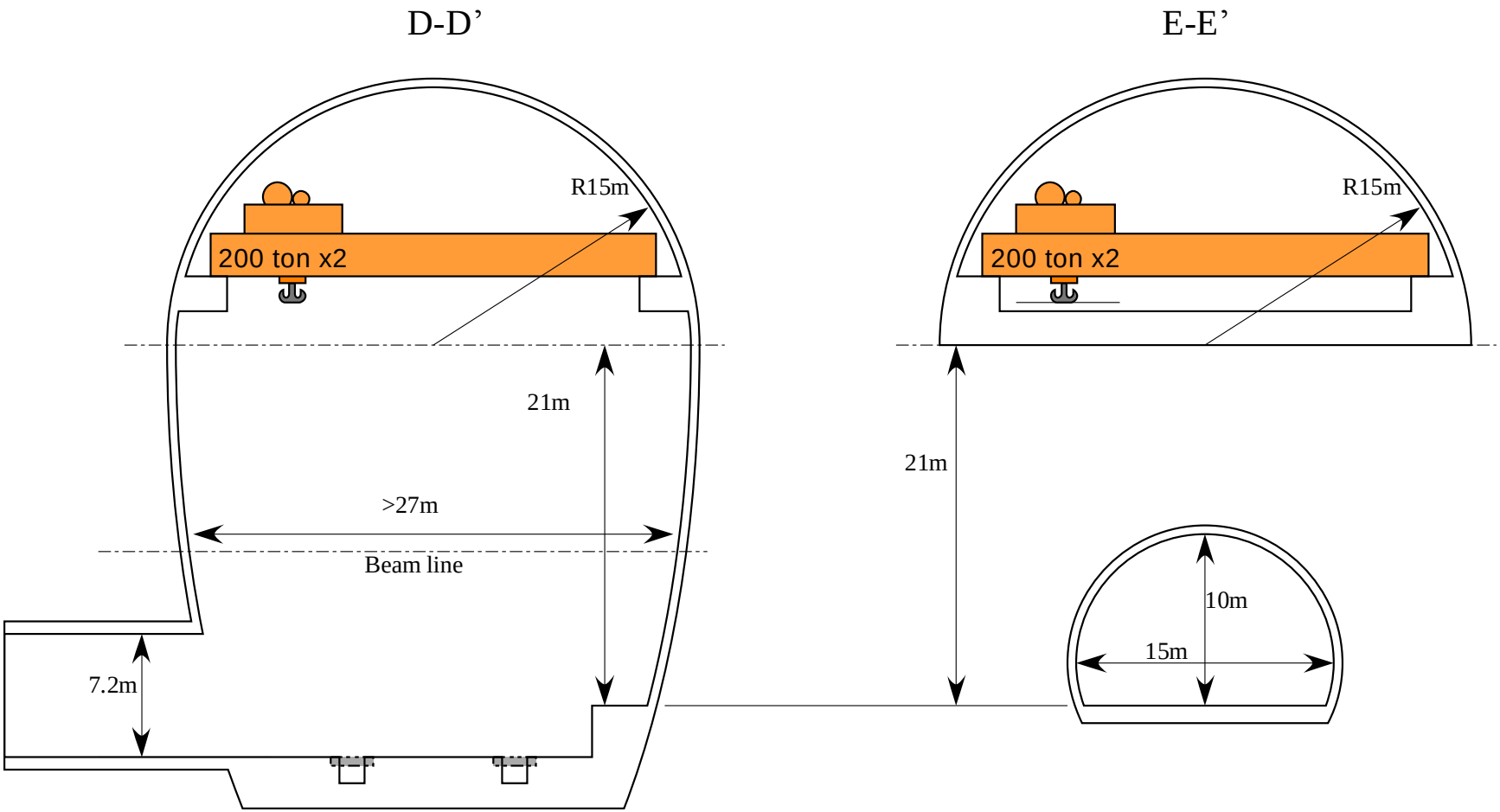

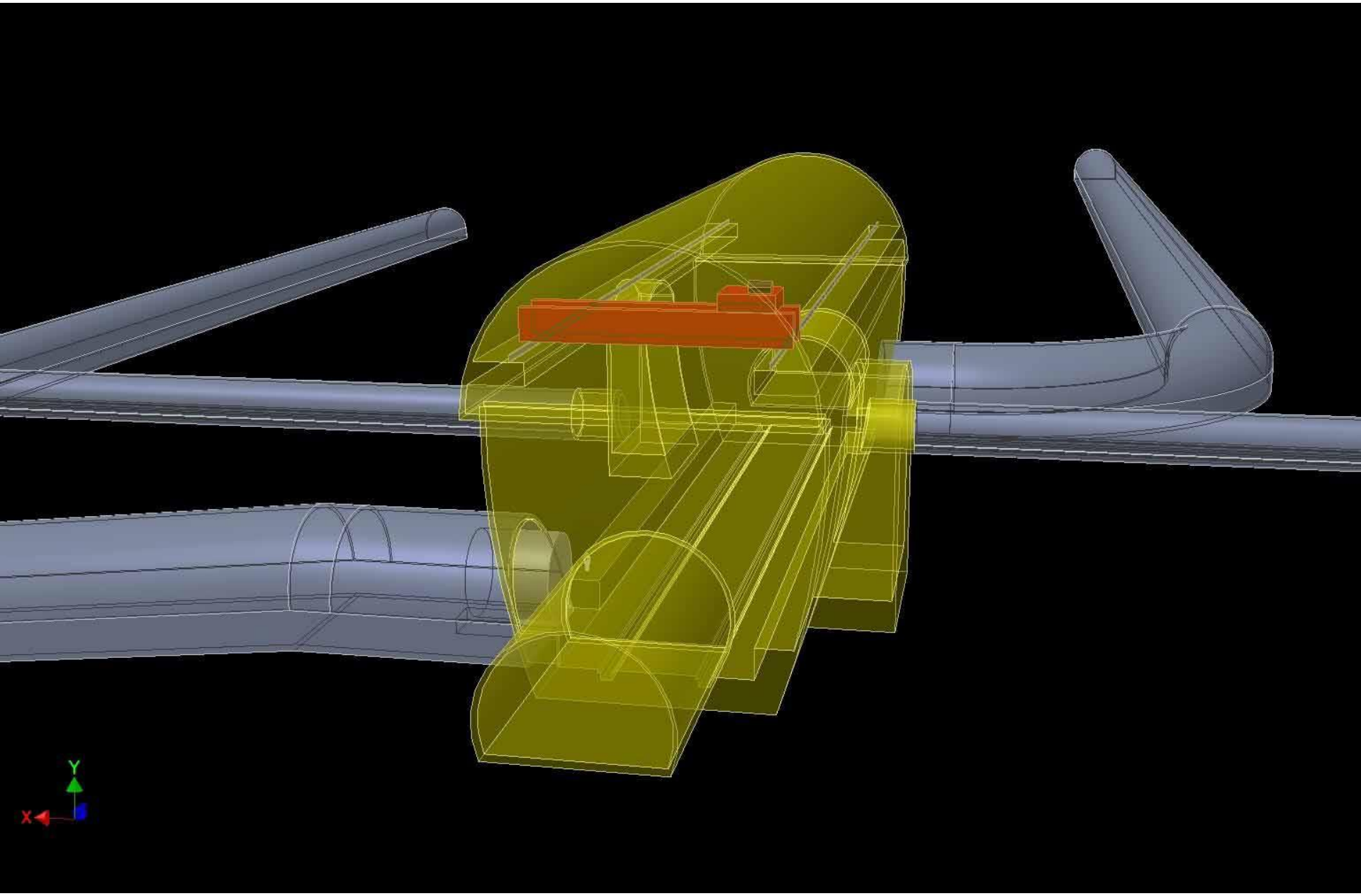
Y
X

Access tunnel

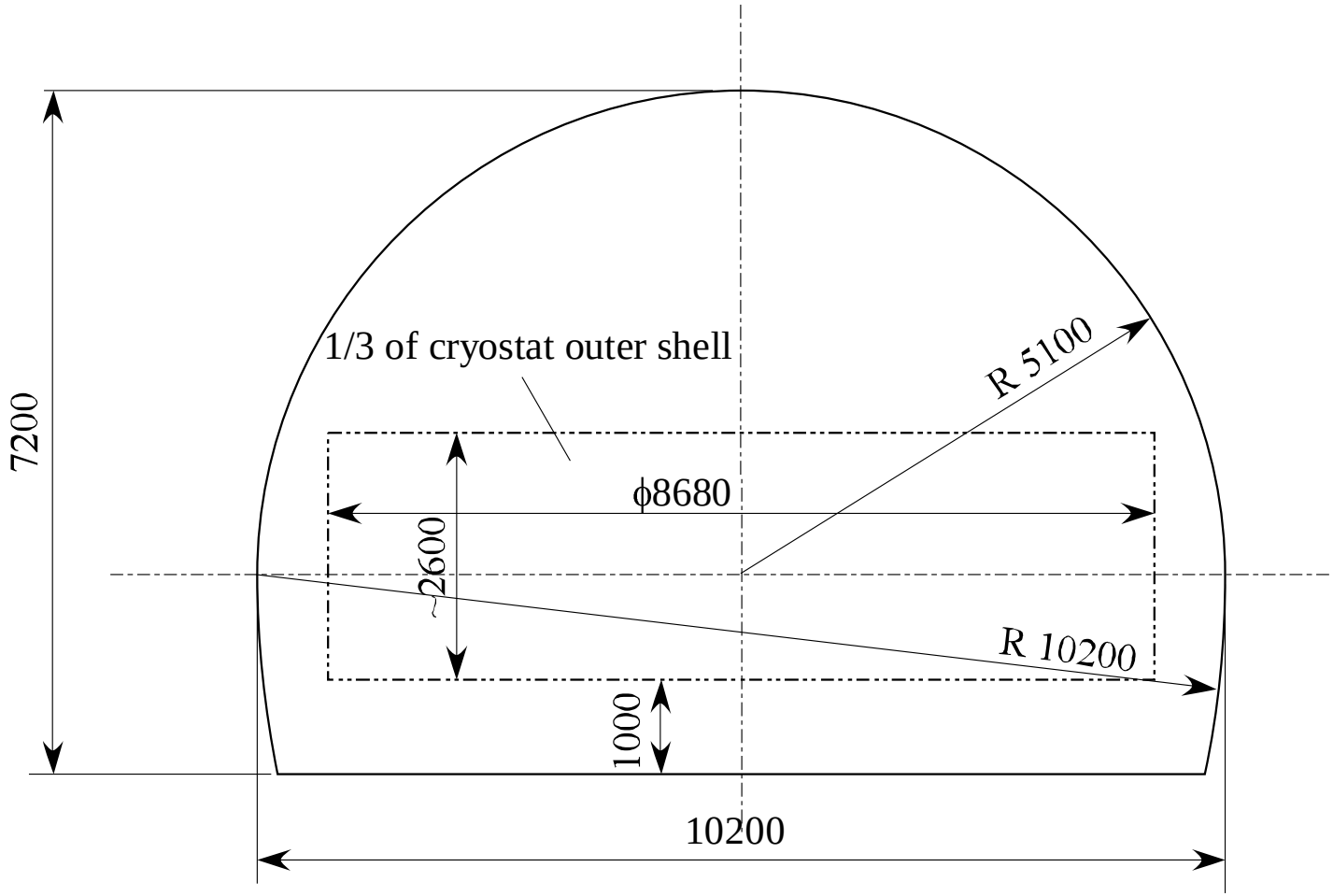

Huge caverns in Japan

- More than 20 huge caverns with access tunnels have been constructed in Japan for hydroelectric power plants
- A 25m(W)x47m(H)x130m(L) (94,000m^3) cavern can be excavated only in 14 months, and a 34mx54mx210m (250,000m^3) was excavated in 21 months

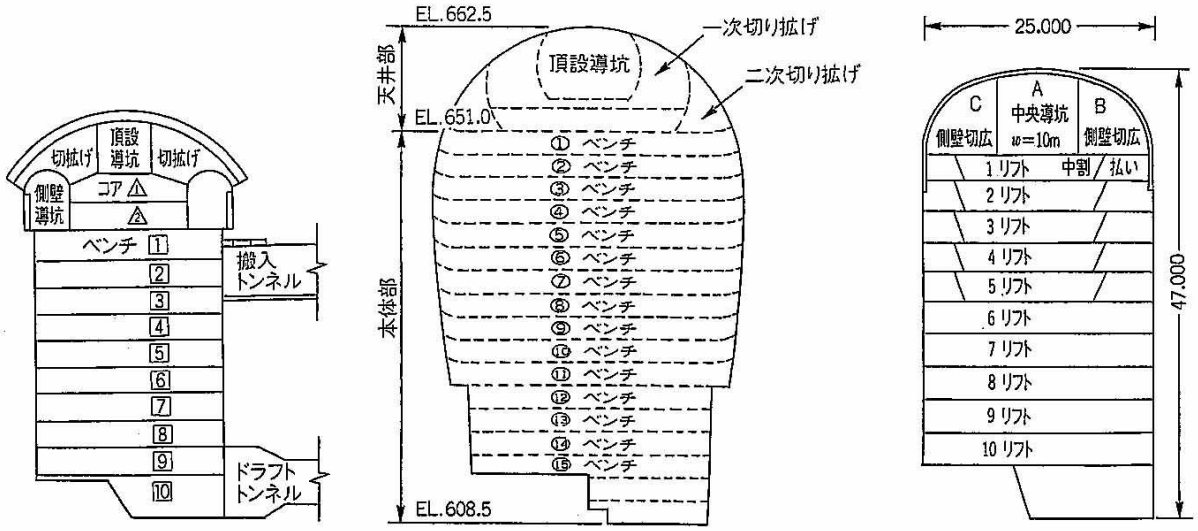

(a) 奥美濃発電所 (きのこ形)　(b) 葛野川発電所 (卵 形)　(c) 奥多々良木発電所増設 (弾 頭 形)

Example of a cavern

- Underground hydroelectric power plant in Japan (Kannagawa power plant)
- Cavern size: 33m(W)x51.4m(H)x215.9m(L) in hard sedimentary rocks
- Construction (excavation) period: ~1y for arch, ~1y for bench
- Depth: d~600m → Heavy components of generators were carried into the cavern through access tunnels