Installation of a Four-mirror Fabry-Perot cavity at ATF

1. Our setup/goal
2. Why 4 mirrors ?
3. The ATF 4-mirror cavity
4. The optical scheme
5. The laser/cavity feedback

French Japanese Collaboration

F. Labaye, E. Cormier, CELIA CNRS Université Bordeaux 1, Bordeaux, France
T. Akagai, S. Miyosohi, S. Nagata, T. Takahashi, Hishoshima University, Hiroshima, Japan
S. Araki, S. Funahashi, Y. Honda, T. Omori, H. Shimizu, T. Terunuma, J. Urakawa, KEK, Tsukuba, Japan
J. Bonis, R. Chiche, R. Cizeron, M. Cohen, J. Colin, E. Cormier, P. Cornebise, D. Jehanno, F. Labaye, M. Lacroix, Y. Peinaud, V. Soskov, A. Variola, F. Zomer, LAL CNRS/IN2P3 Université Paris-Sud 11, Orsay, France
R. Flaminio, L. Pinard, LMA CNRS/IN2P3, Lyon, France

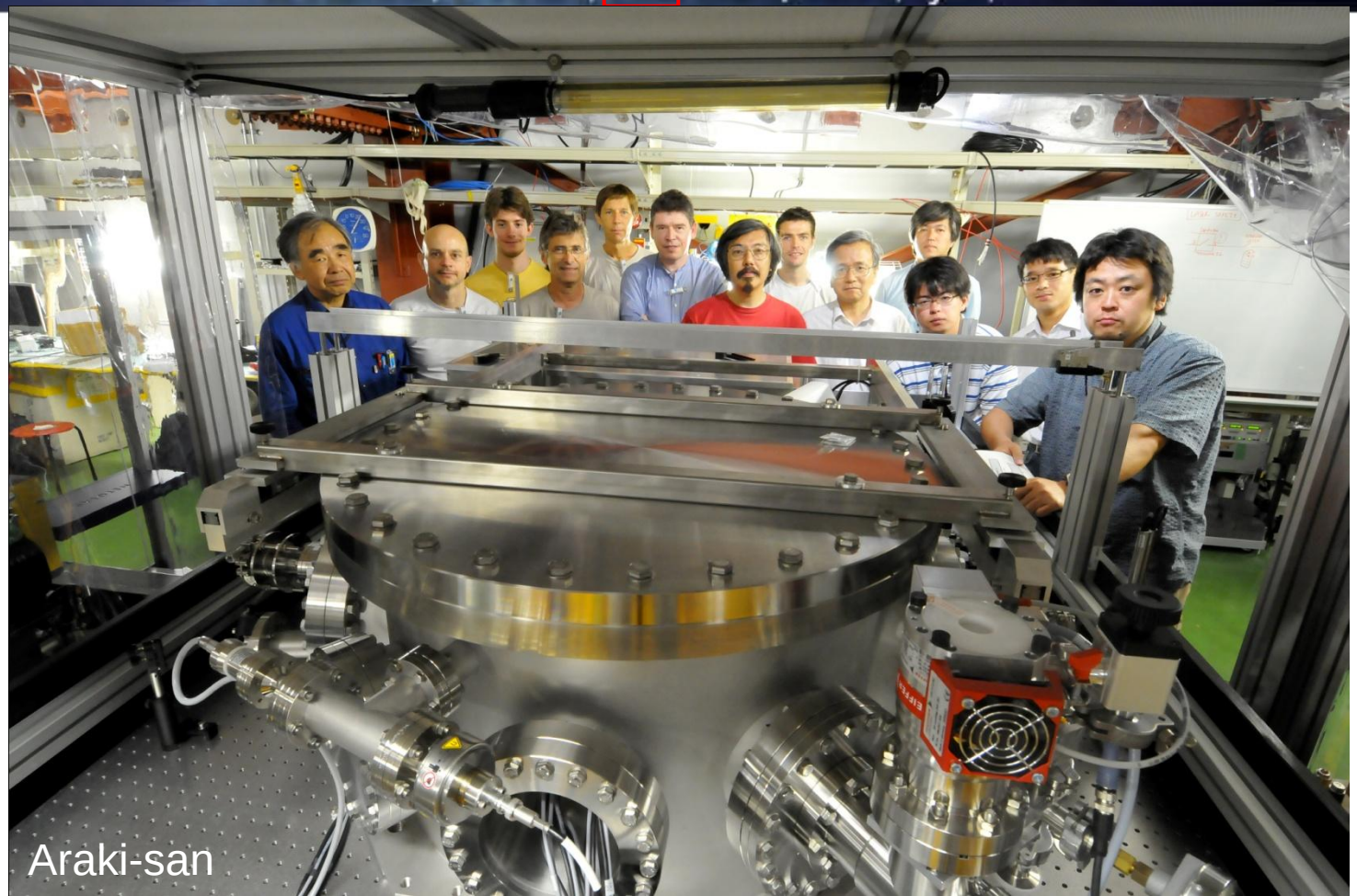

2 steps R&D

STEP ONE: commissioning a 4-mirror cavity at ATF by end 2010

STEP TWO: upgrade mirrors & laser power

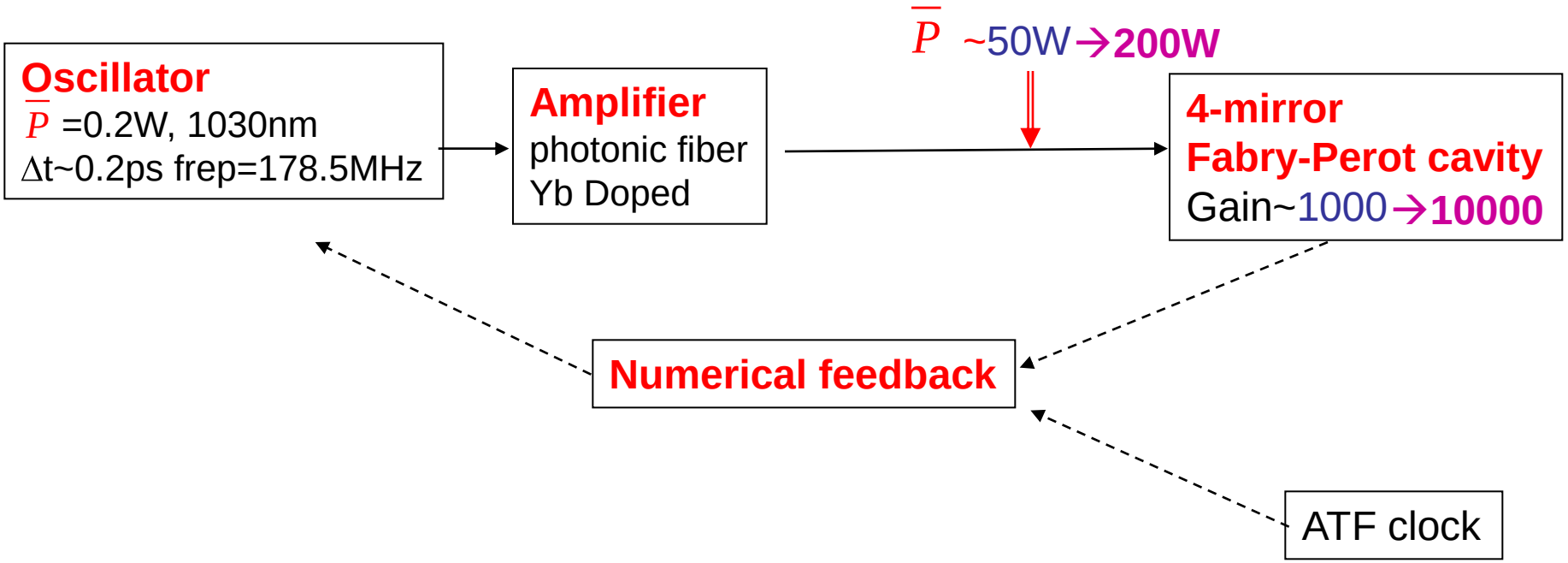

STEP ONE (end 2010)
With cavity laser/coupling ~50% ➔Power_cavity~25kW

~75γ/bunch crossing
➔~5 E9 γ/s (Emax=28MeV)

STEP TWO (curren-end 2011 ?)
With cavity laser/coupling ~50% ➔Power_cavity~500kW

~3000γ/bunch crossing
➔~2 E11γ/s

Goal: to reach the MW average power

Why a non planar four-mirror cavity ?

2-mirrors& small laser spot
➔ unstable resonator
Stable solution: 4 mirror cavity as in Femto laser technology

BUT
➔ astigmatic & linearly polarised eigen-modes
which are instable because of vibrations at very high finesse (AO48(2009)6651)

Non-planar 4-mirror cavity
➔Stable & circularly polarised eigenmodes (AO48(2009)6651)
- **New feedback technics with this geometry (Honda, OC282(2009)3108)**

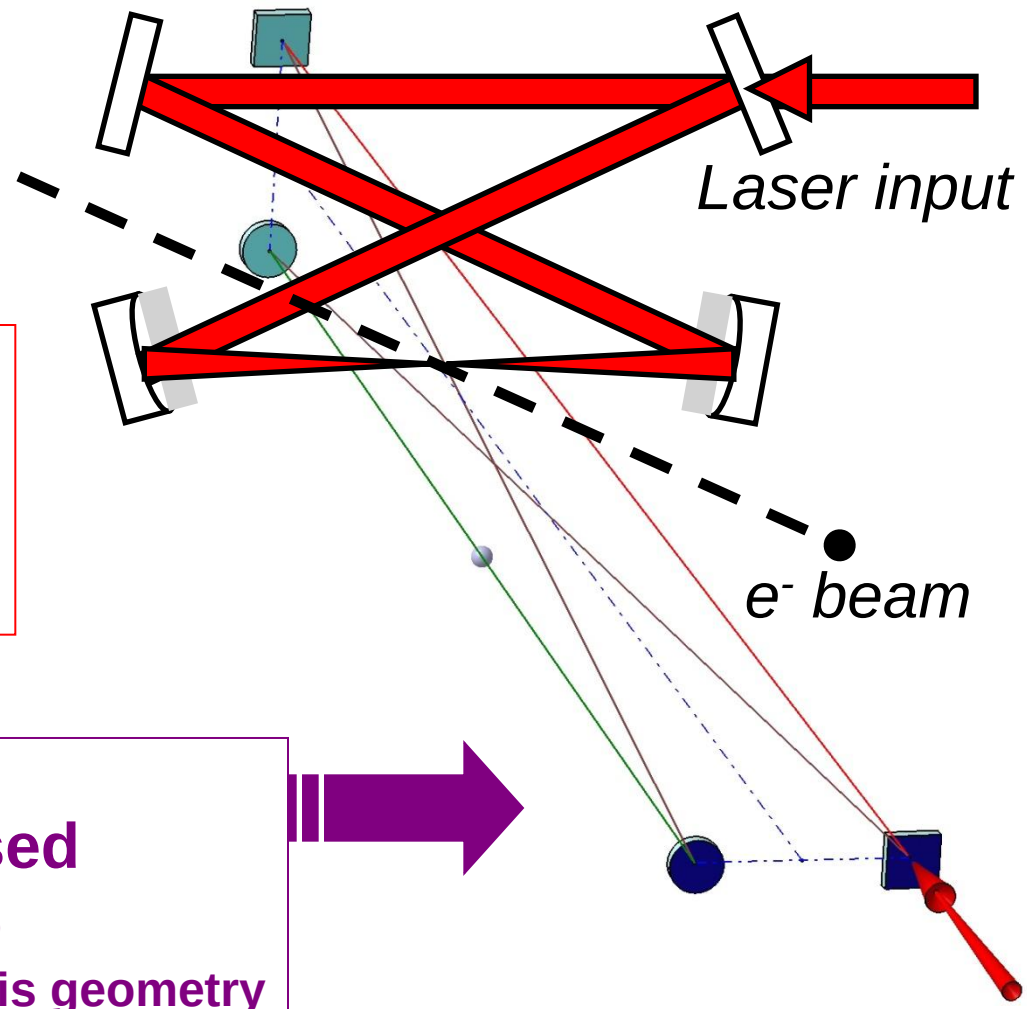

Prototype of nonlanar 4 mirrors resonator (low finesse)

•Check the general astigmatism mode shape/propagation (*Arnaud, Bell Syst. Tech. (1970)2311*)

➔ ok

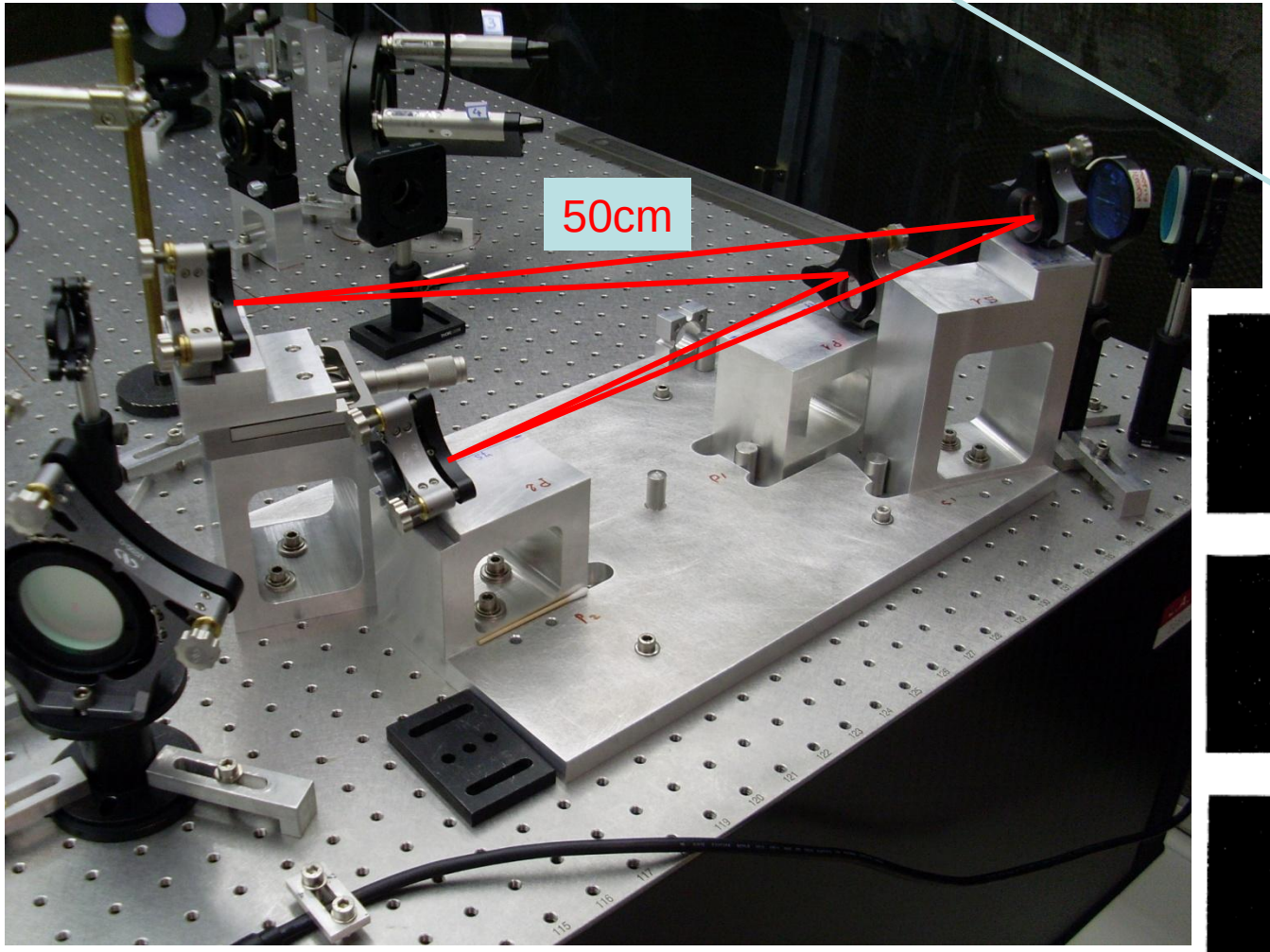

Ellipse intensity profile 'turning'

Kogelnik, Apl. Opt. 8(1969)1687

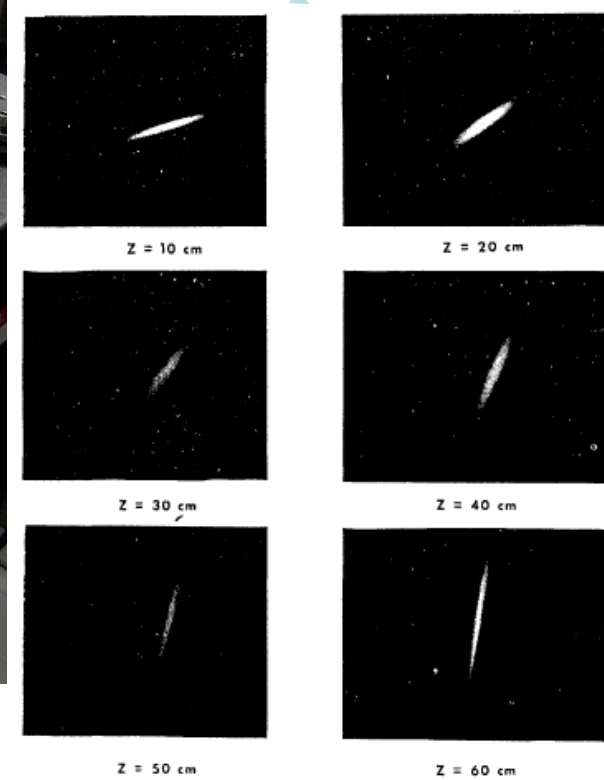

Non planar 4-mirror cavity for ATF

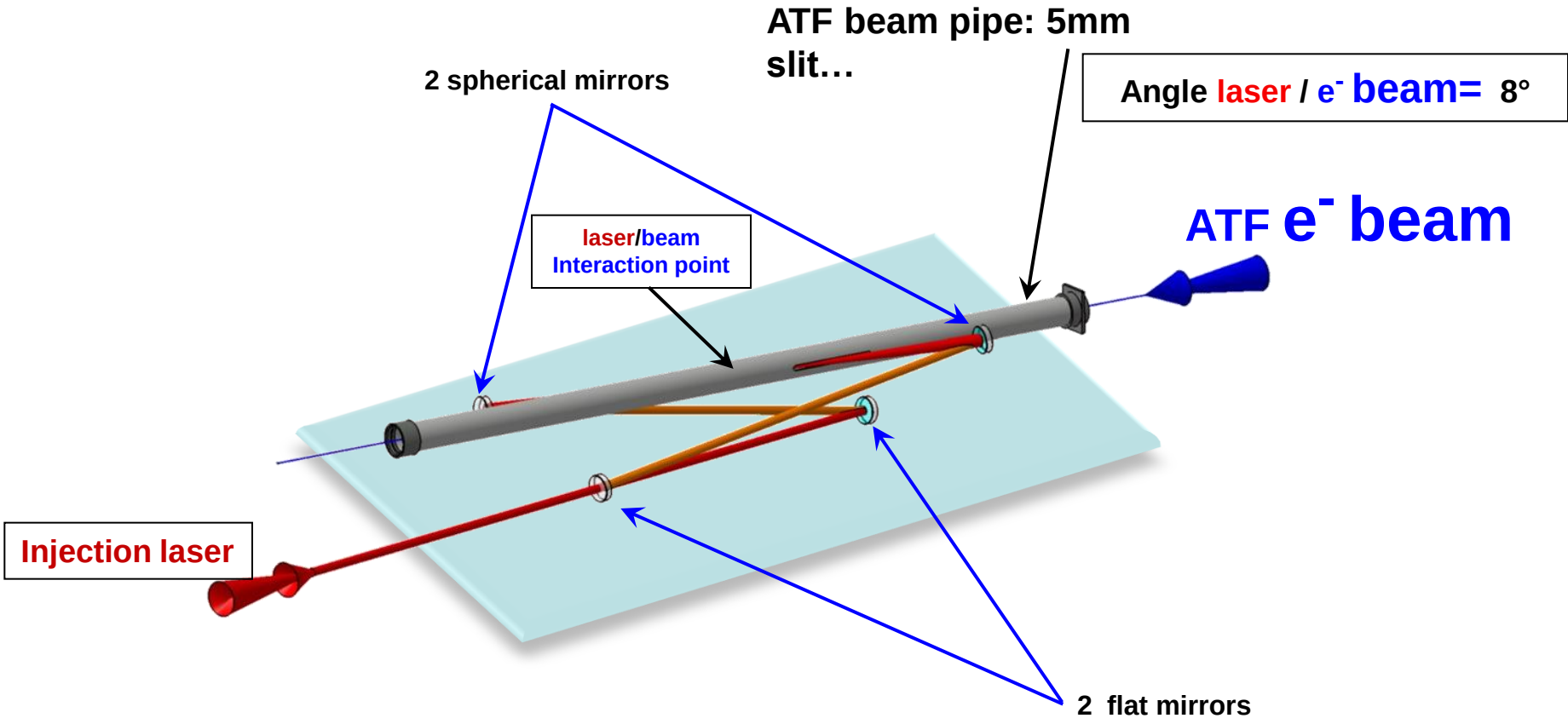

Mirror positioning system

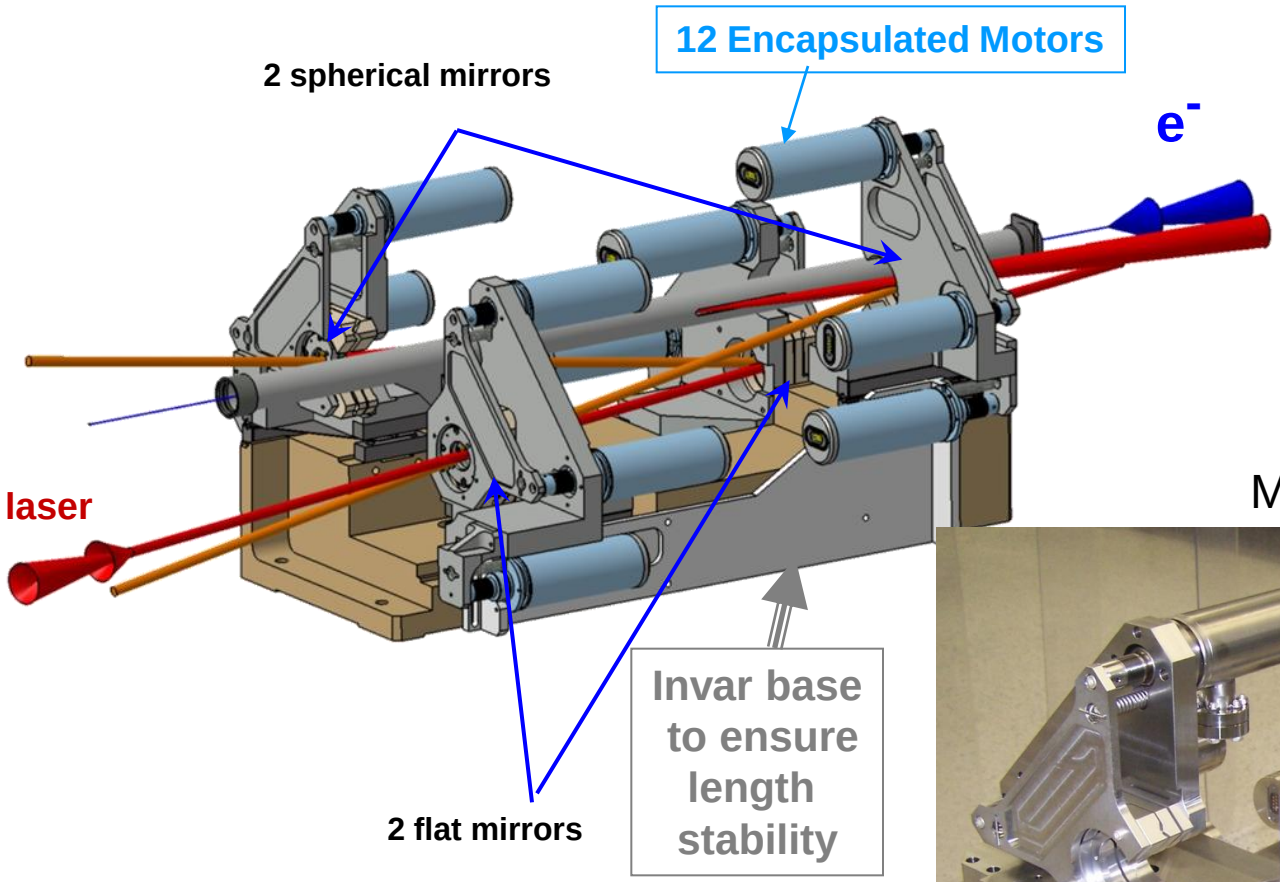

Mounting in class 10 room

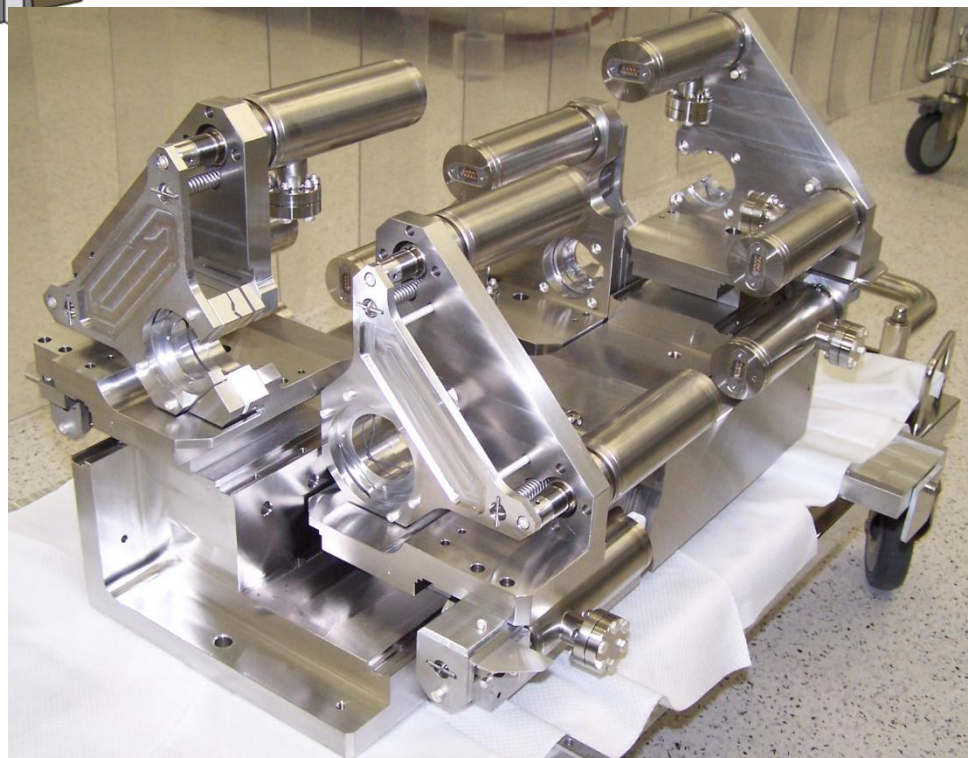

OVERALL DESIGN PRINCIPLE

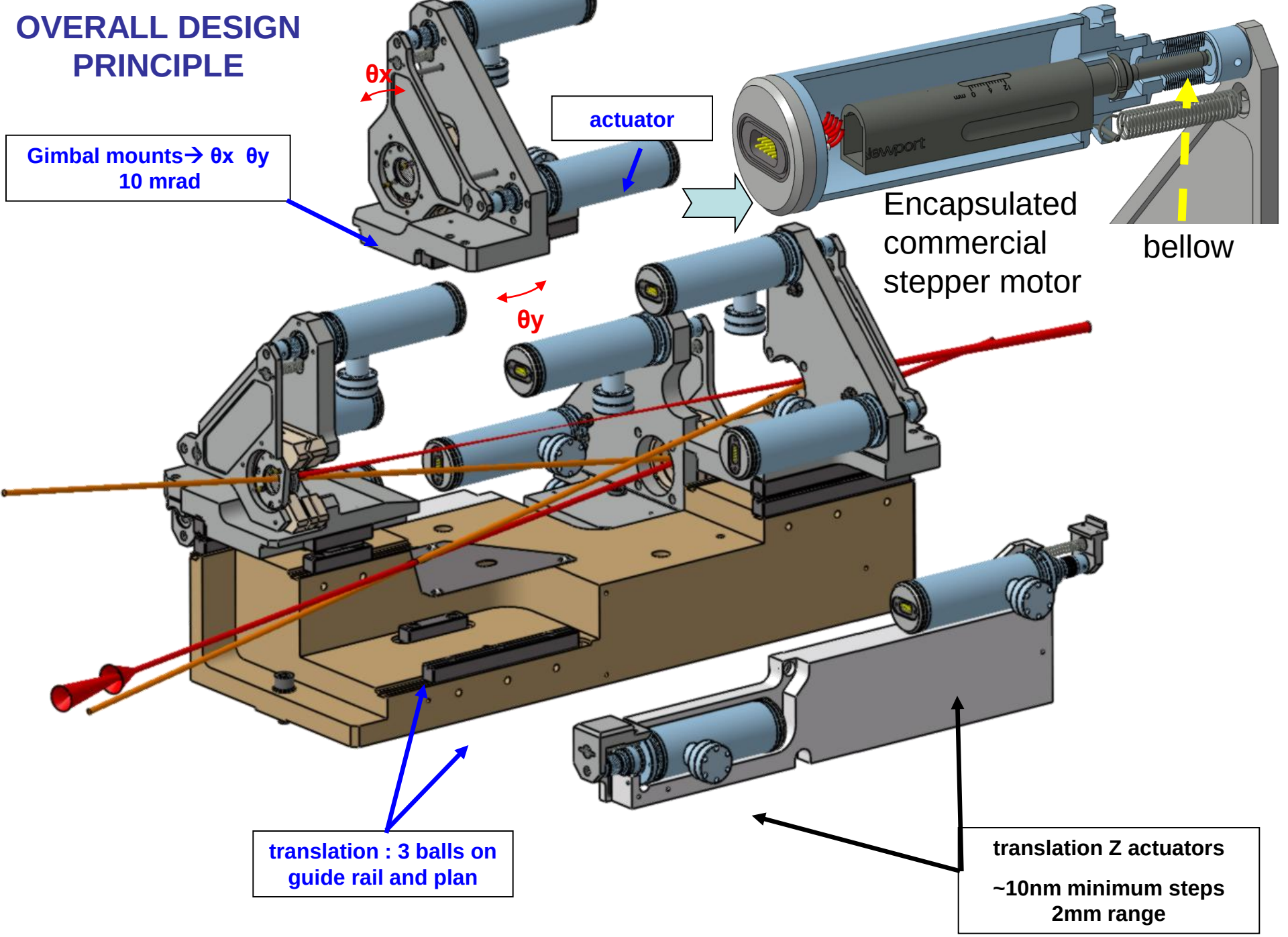

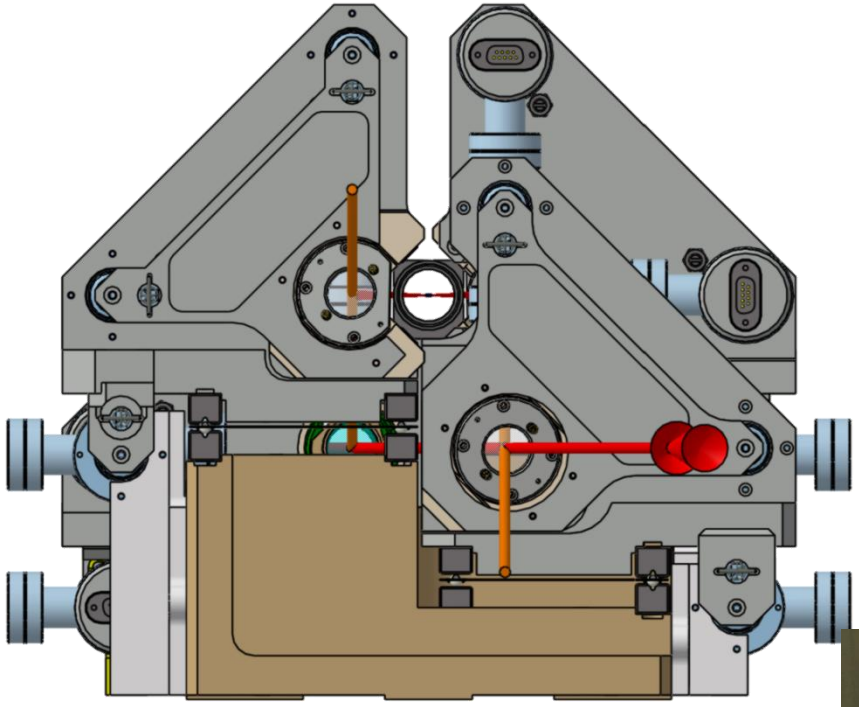

Cavity round-trip -ATF clock matching done with
1 z translation motor
&
1 annular piezo is mounted inside one flat mirror mount

Place for ATF beam pipe

Mirror mount troncated to decrease incident angle : 8°

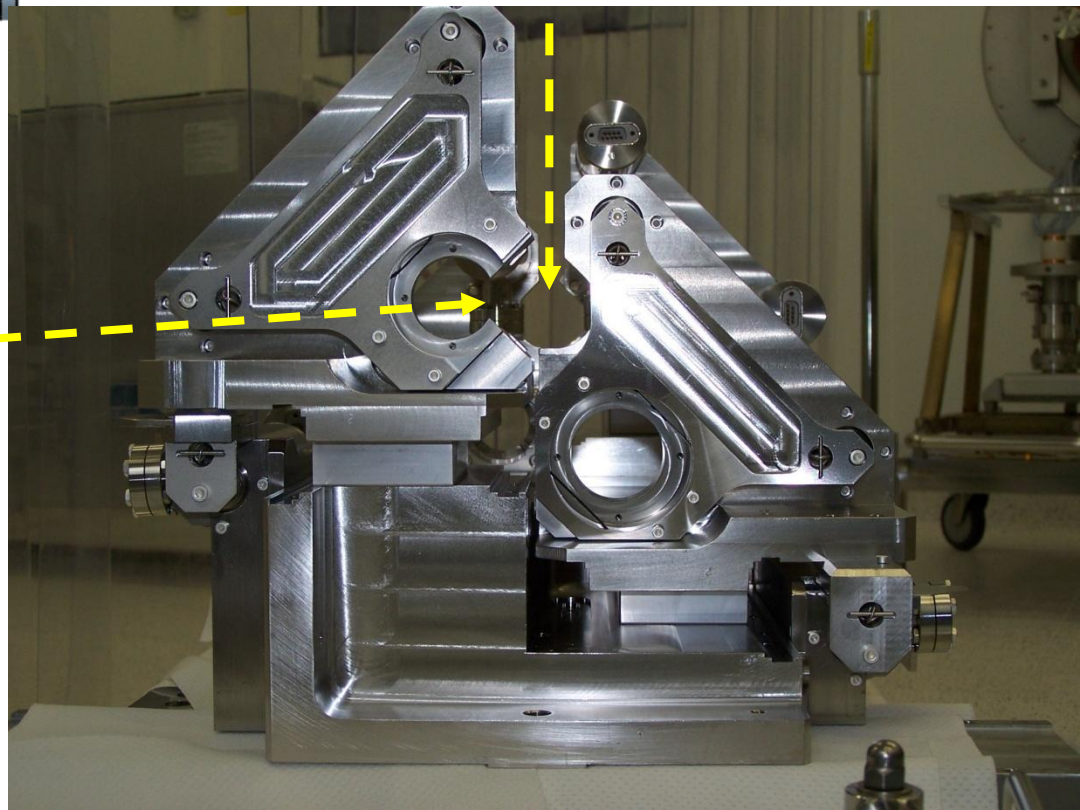

Vacuum vessel for ATF

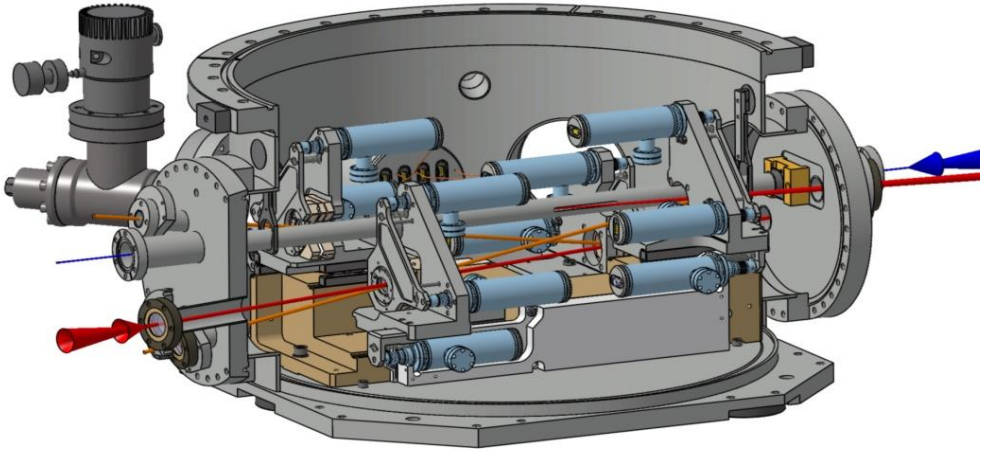

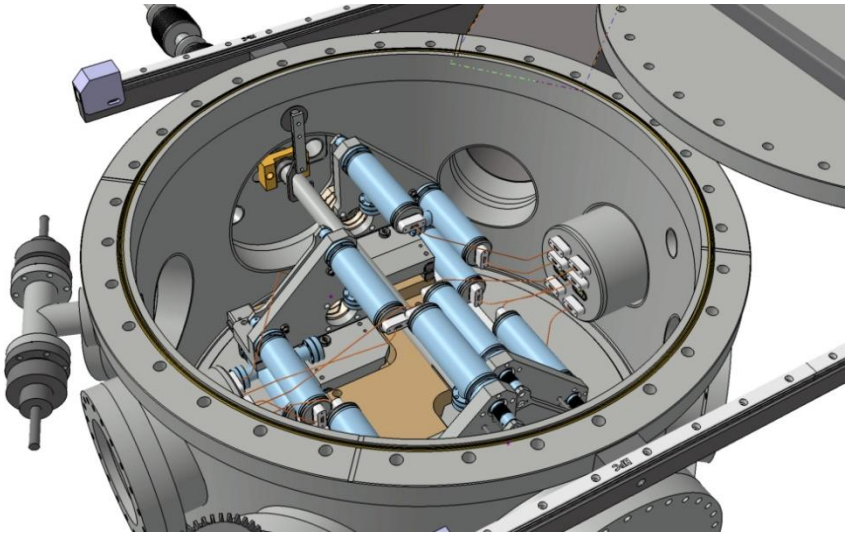

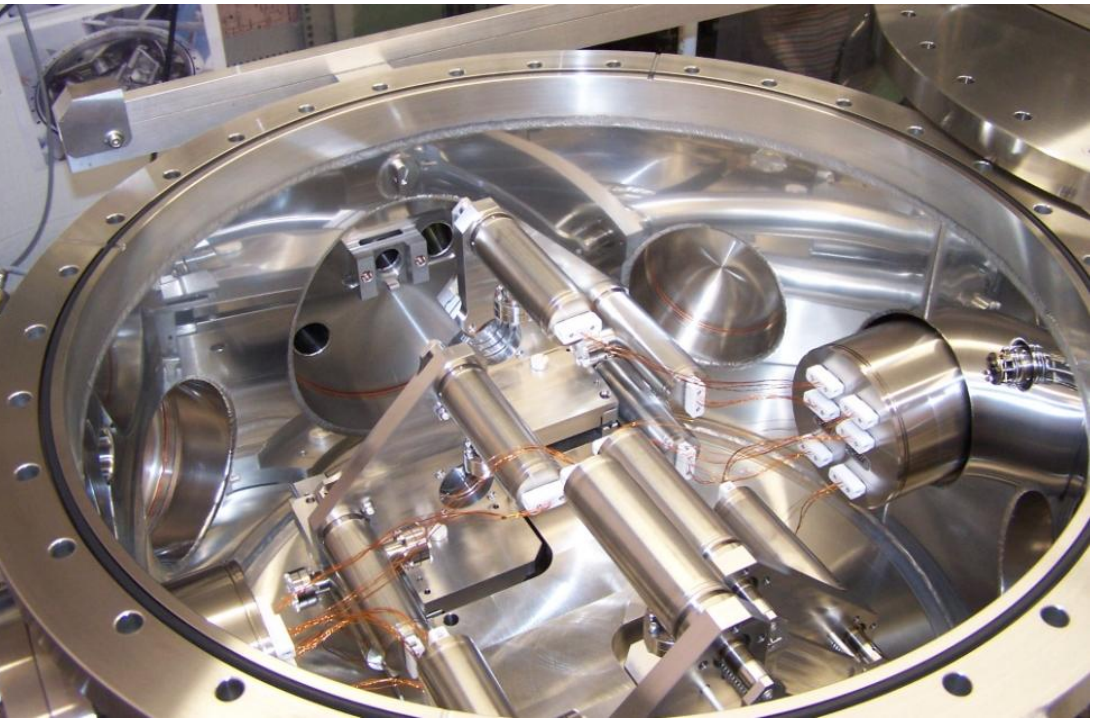

Ultra high vacuum wires for the 12 motors and the piezo

Vaccuum once installed at ATF: ~6.5x10^{-8}mbar

Implementation at ATF

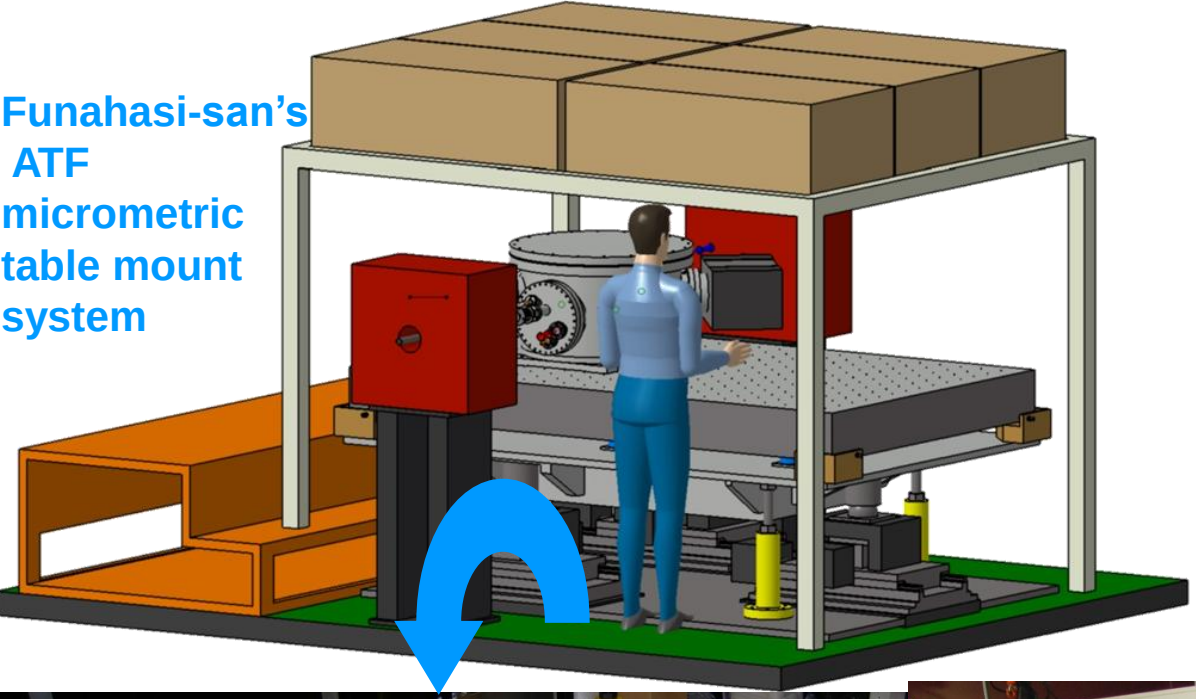

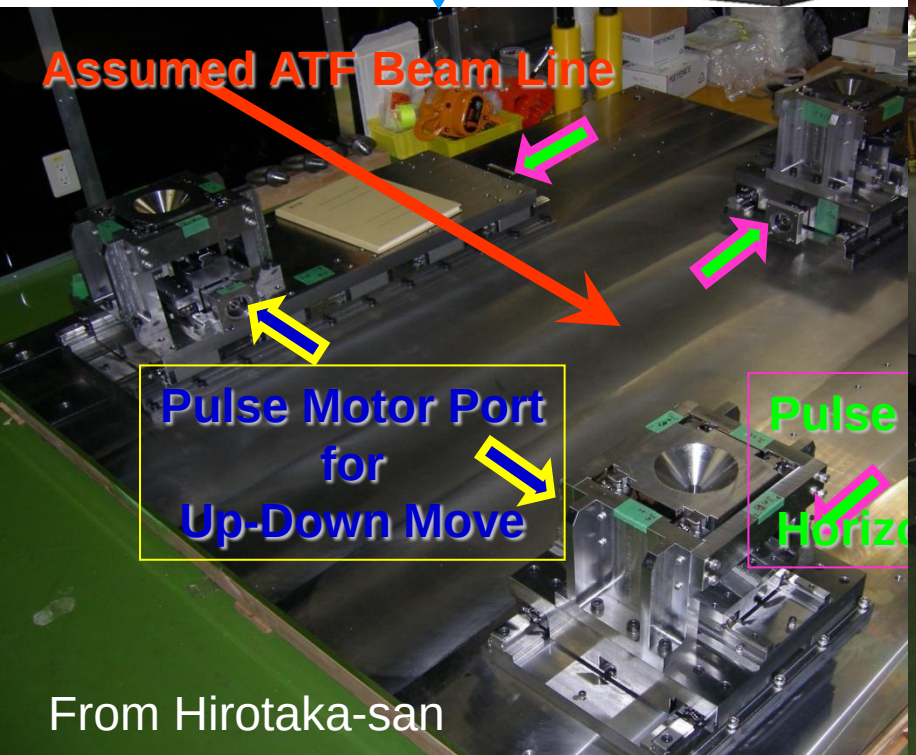

From Hirotaka-san

The optical scheme

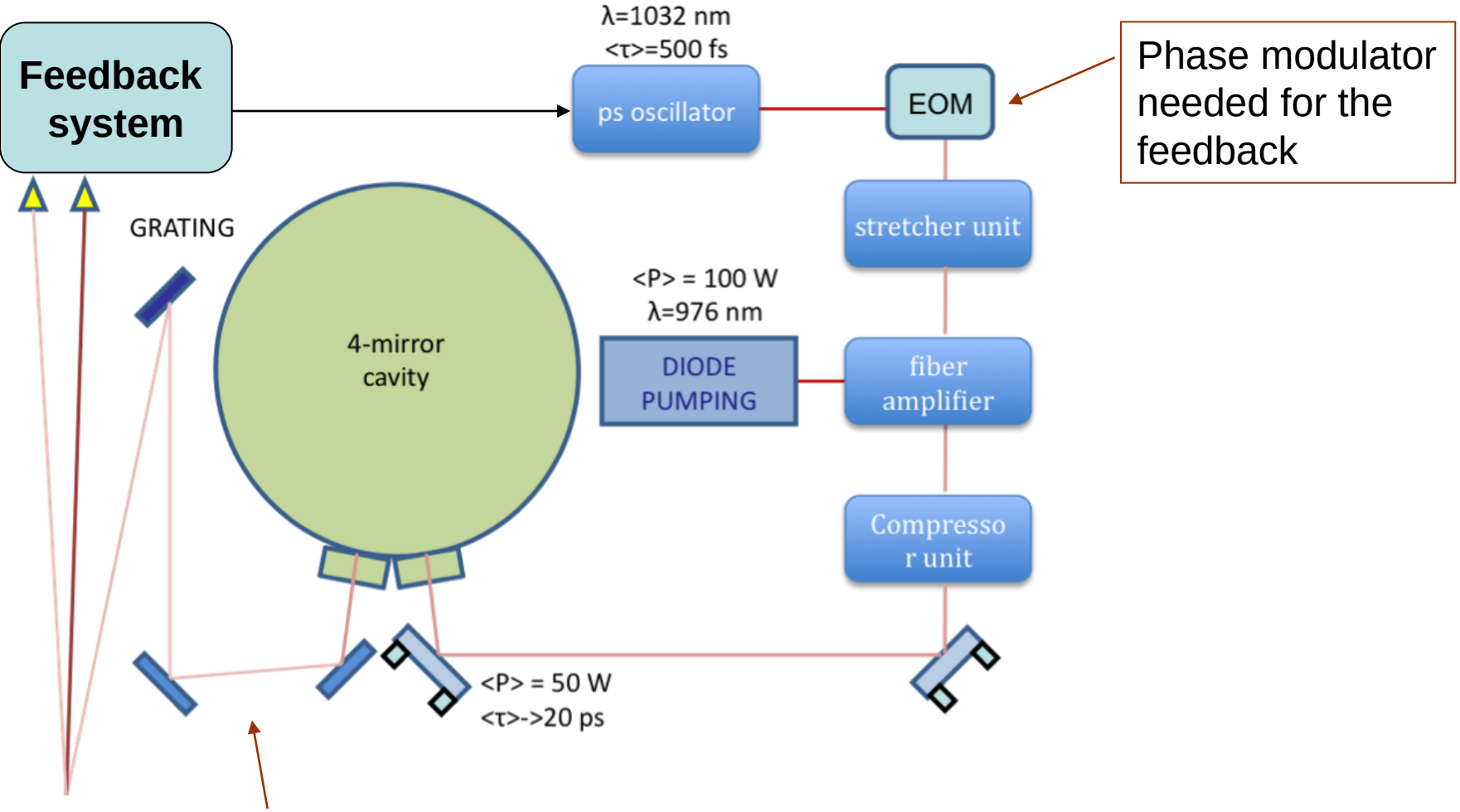

•Signal reflected by the cavity used to build the laser/cavity feedback signal:

•interference between the modulated incident laser beam AND the leackage on the beam circulating inside the cavity

Numerical electronic for:
laser-cavity Pound-Drever-Hall feedback
cavity-ATF clock feedback

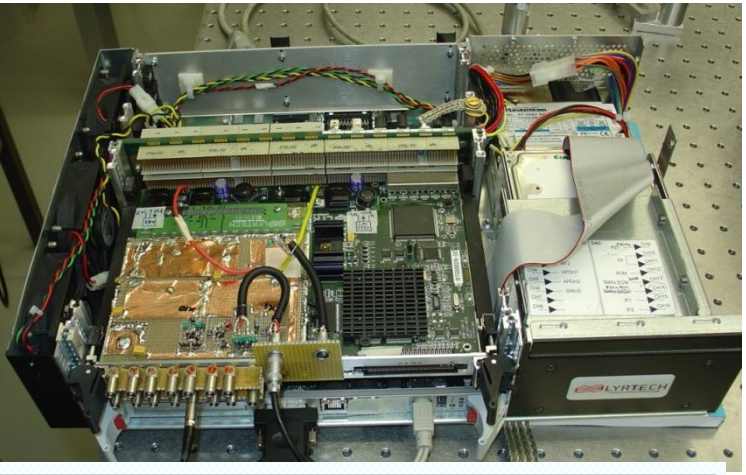

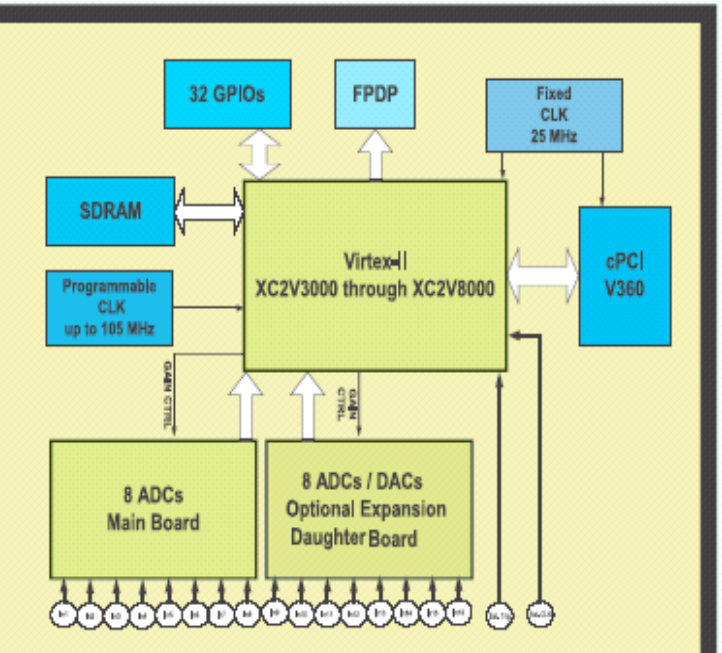

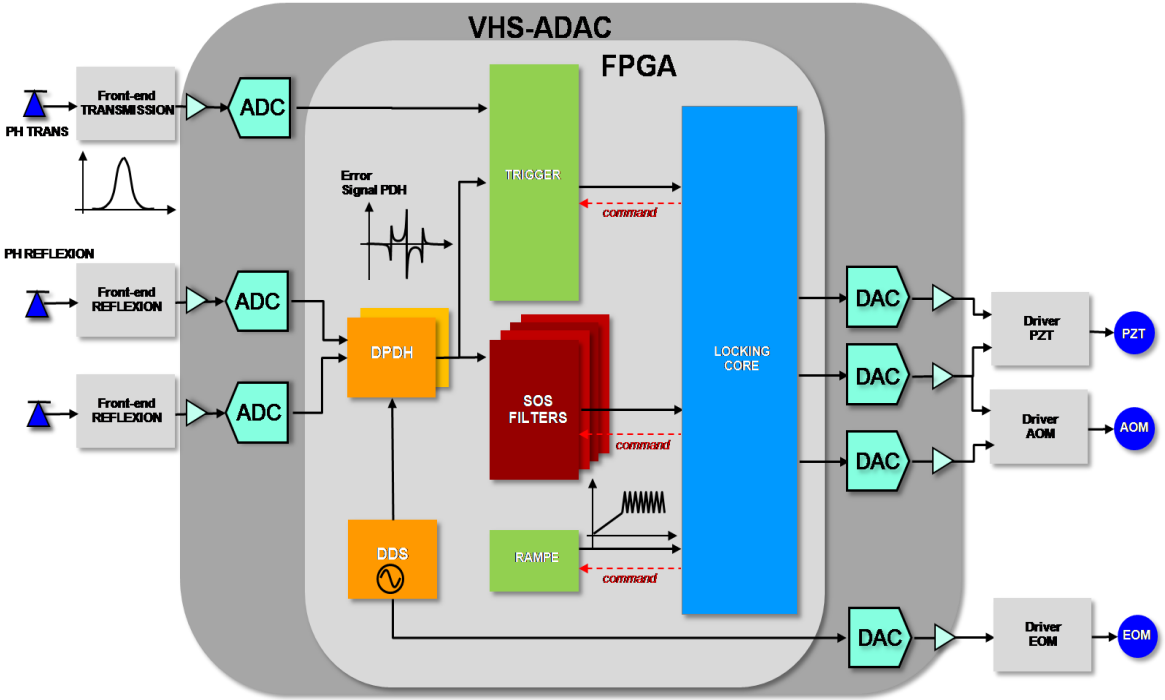

Rétroaction on laser frequency

Clk = 100 MHz

8x ADC 14 bits

8x DAC 14 bits => Filtering => 18 bits / 400 kHz

FPGA Virtex II (➔Virtex IV)

The laser amplification R&D

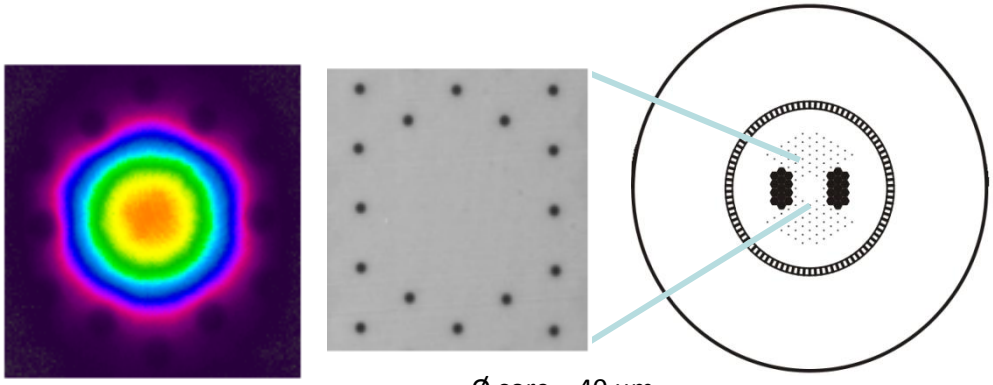

Ø core = 40 µm
Ø cladding = 200 µm

We use Ytterbium doped photonic cristal fiber as amplifier

- We obtained 200W but spot was not stable
- We fix the power to ~50W to get stable laser beam
- Thermal control issues to be solved before increasing power
- Also damage protection issues are not easy to solve at very high power (we broke many fibers…)
- Recent publication shows 800W average power (11µJ/pulse) with same technics (**Limpert,OL35(2010)94**)
- but we need long term stability and reliability…

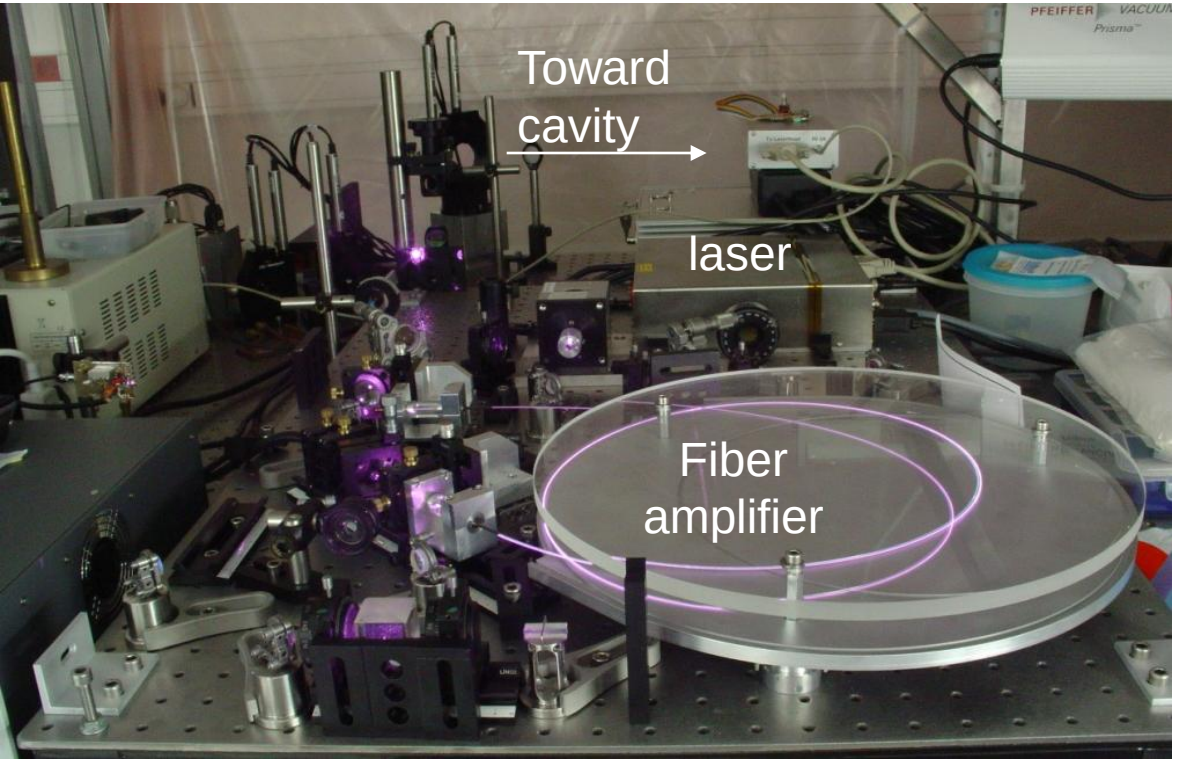

➔thechnological R&D

Installation of the experiment at ATF

ATF

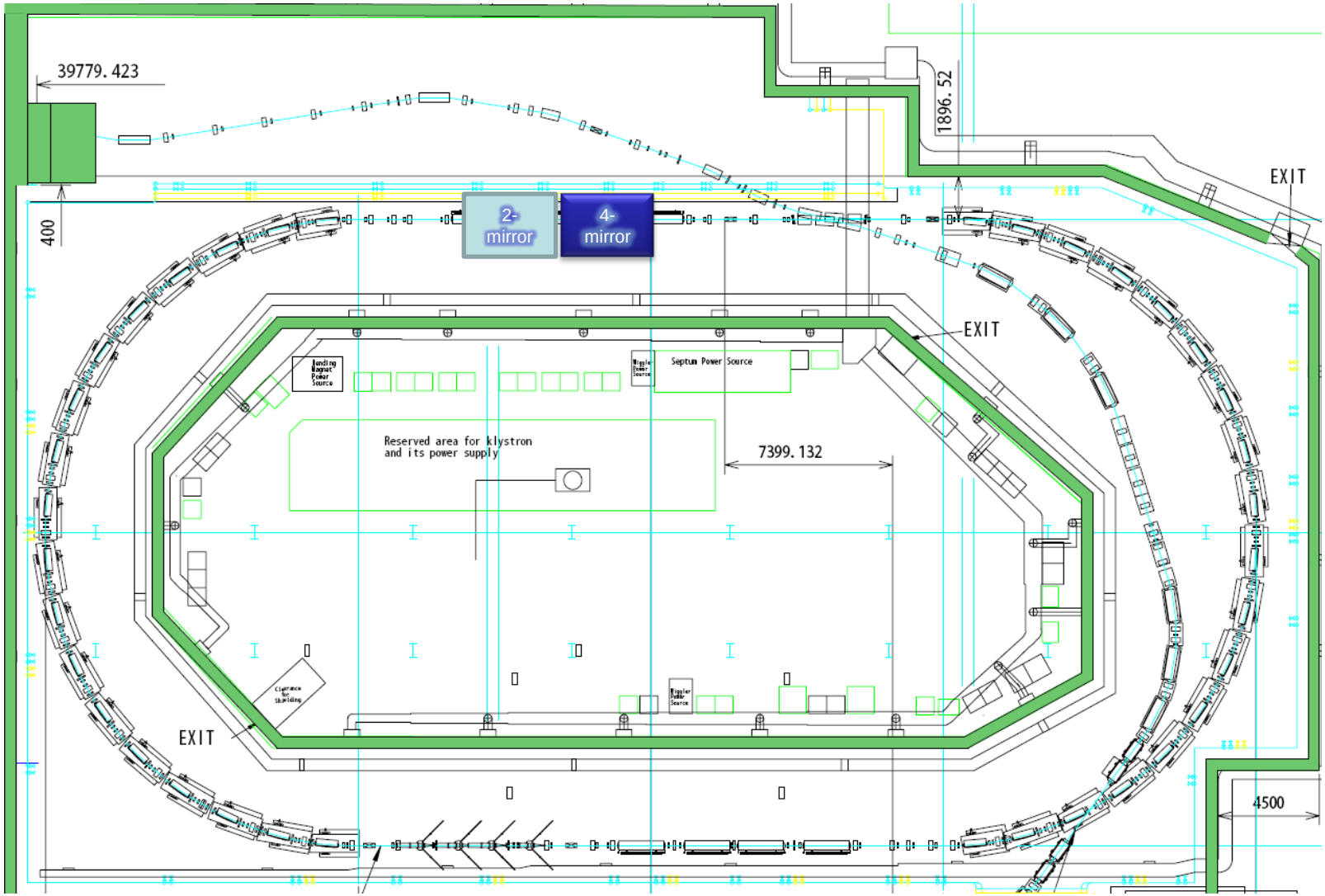
39779.423
1896.52
400
2-mirror
4-mirror
EXIT
EXIT
Septum Power Source
Reserved area for klystron
and its power supply
7399.132
EXIT
4500

ATF tunnel opened on
27th july

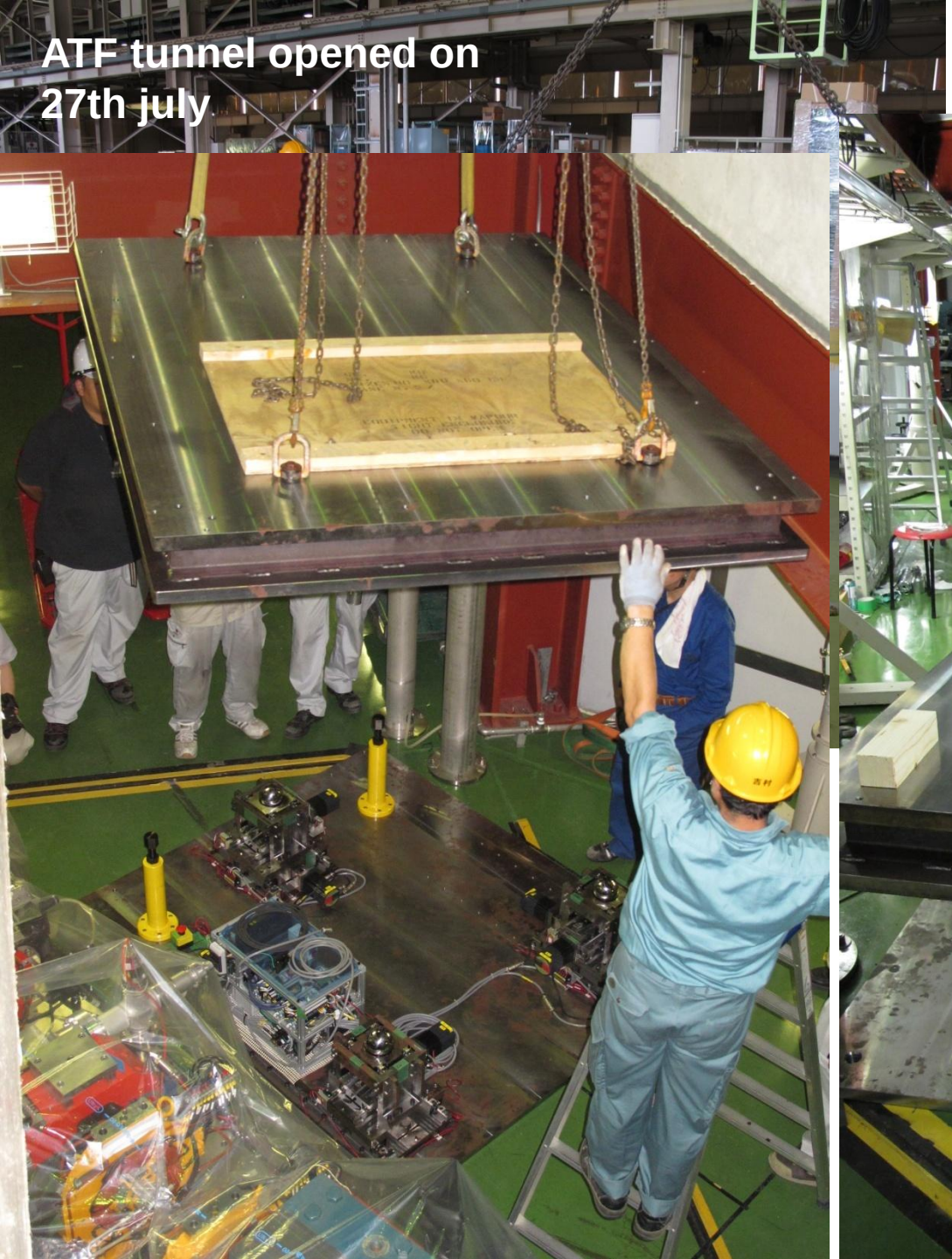

Cavity installed on 28th july

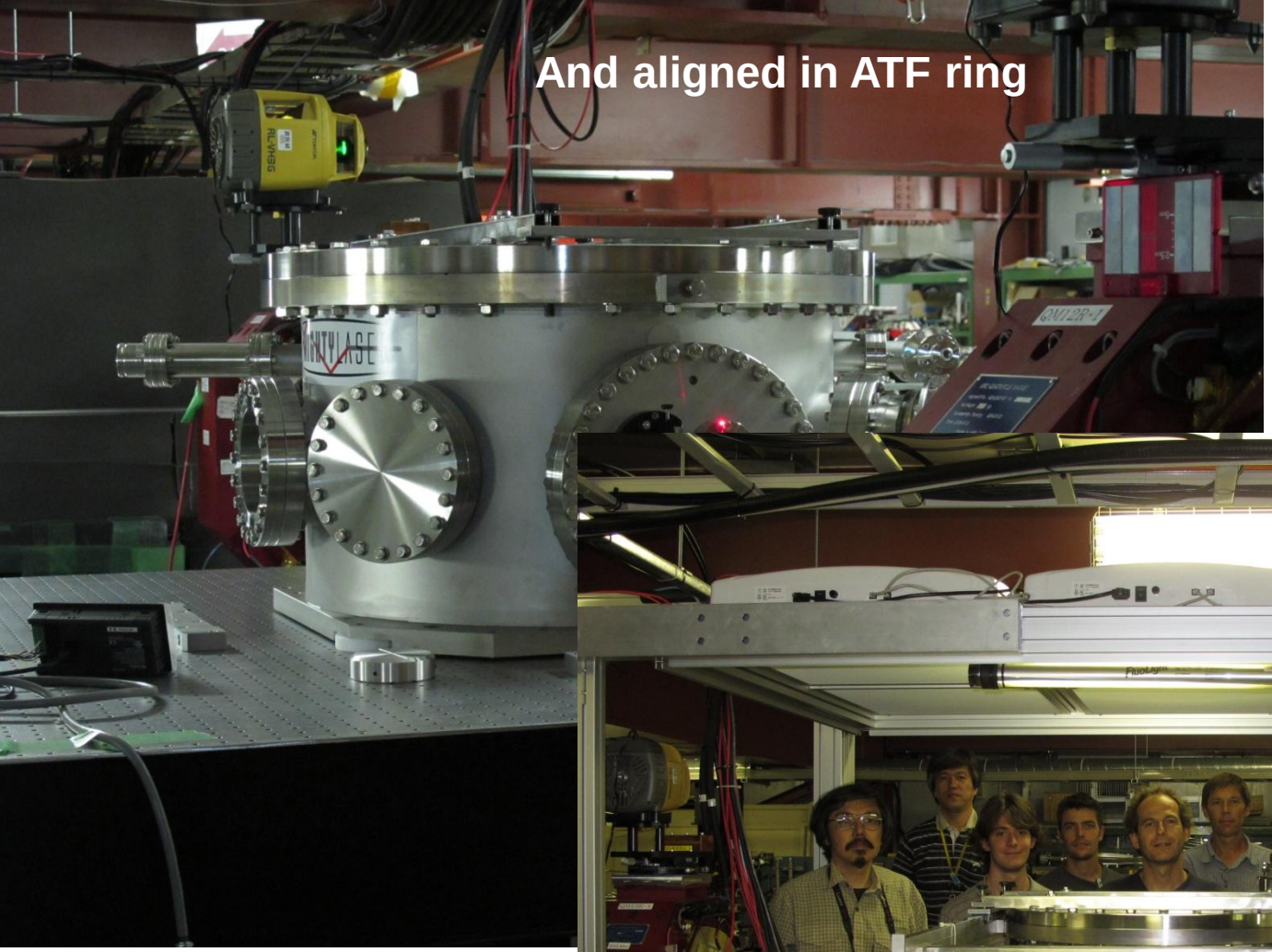

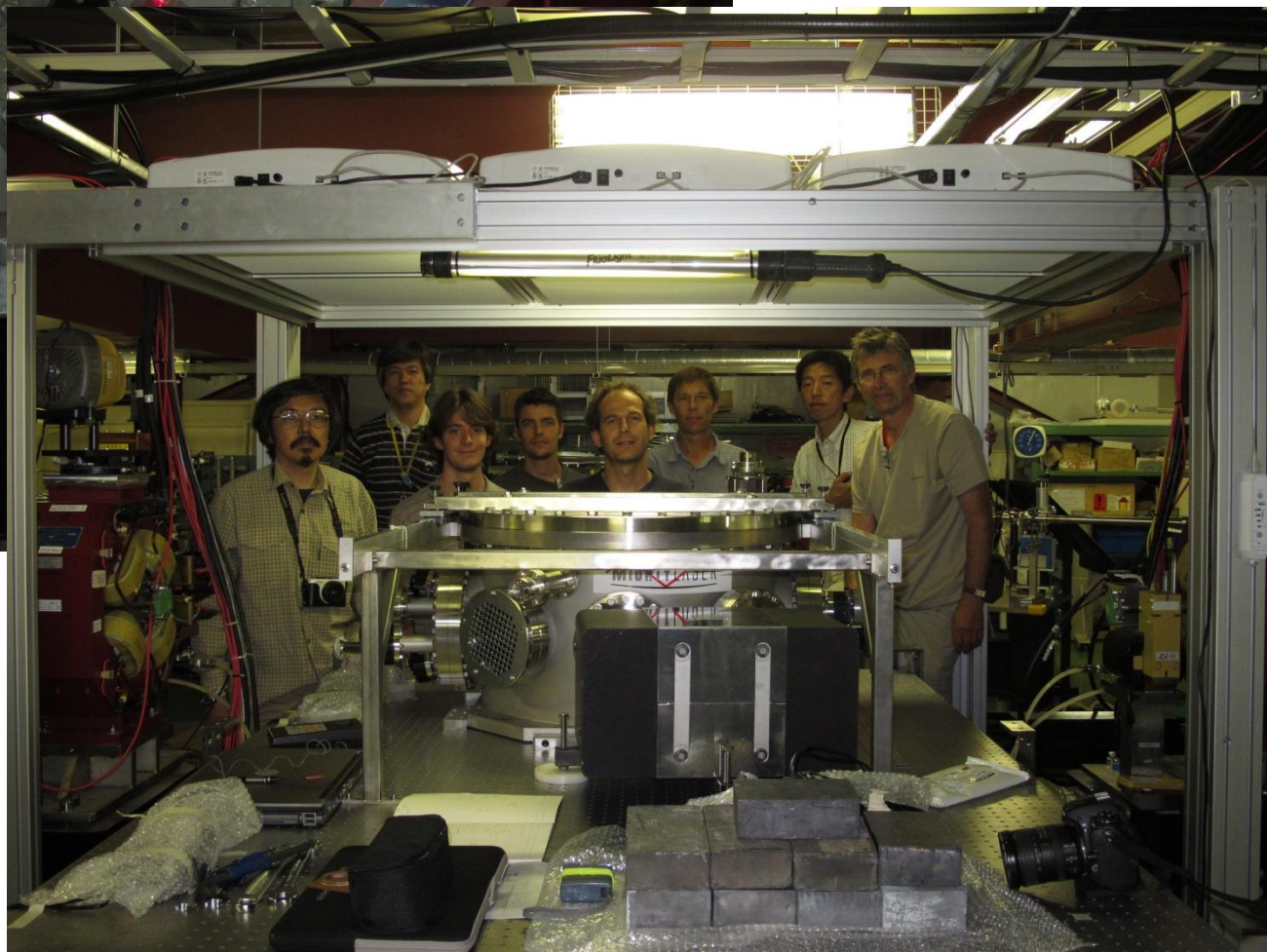

29th july: after 3 days ready to install the experiment

- Status
  - Laser-cavity-ATF_clock are locked together
  - Still some DAQ code to be written but we should start to try to produce our first γ rays next week
- Progress in parallel
  - Increase laser power R&D (will *re*start in 2011)
  - Use sapphire substrates for the cavity mirrors to prevent thermal load effects (started last month)

Summary

•There is now a new 4-mirror fabry-perot cavities in ATF to contribute to a global R&D effort to reach the MW average power level

1 cavity pulsed 2-mirrors

2 cavities cw laser-wire

4-mirror pulsed cavity

The new cavity has 4 mirrors and is non-planar to match requests of futur Compton e+ polarised sources or compact X-ray machines