SiD Forward Region

Tom Markiewicz/SLAC

KILC'12, Taegu, Korea

24 April 2012

Granada LCWS'11 Engineering Model of SiD Forward "R25cm" Region

G. Anzalone/SLAC

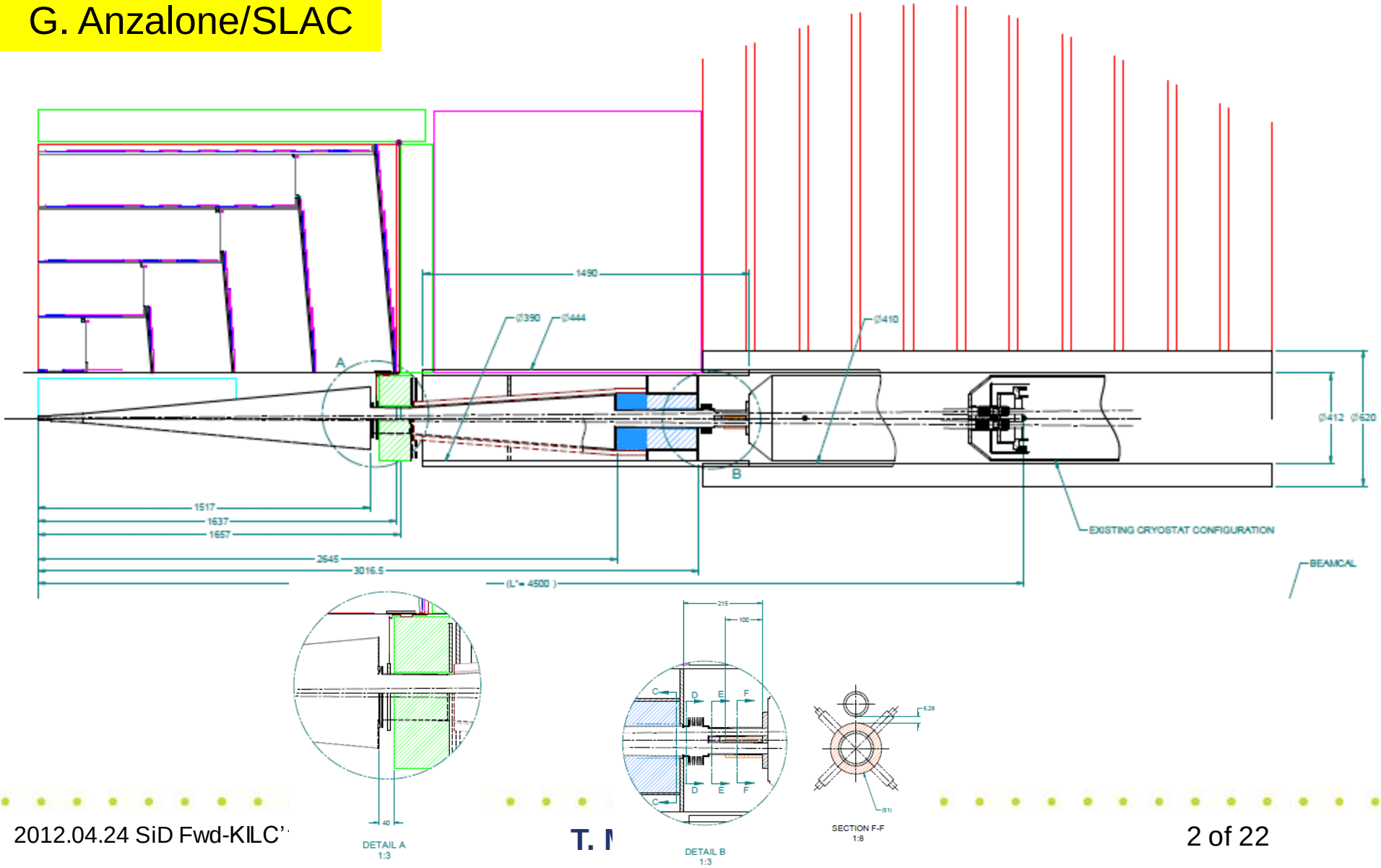

Post Granada Progress

Work:

- Bill Sporre (BNL)
  - **QD0 & FCAL Support & Adjustment System**
- Marco Oriunno & Gene Anzalone (SLAC)
  - **Beampipe assembly and VXD Support**
- Sasha Novokhatski (SLAC)
  - **HOM & Beam Heating Calculations**
- Mike Sullivan (SLAC)
  - **Vacuum Calculations**

Progress:

- **Layout of area between QD0 and QF1**
  - Valves, Kicker, QD0 service line, Support tube design
- **Agreement as to stay clears and QD0-Tracker Interface**
- **3D model of IP-QD0 region**
- **HOM heating at QD0 Bellows & beamline vacuum profile**

BNL Design of QD0 Support and Alignment System

- ANSYS analysis of QD0 outer can in either original 0.25” or suggested 1” thickness shows unacceptable deformation of cold mass support structure
- BNL designing an external support tube and a compact mover system

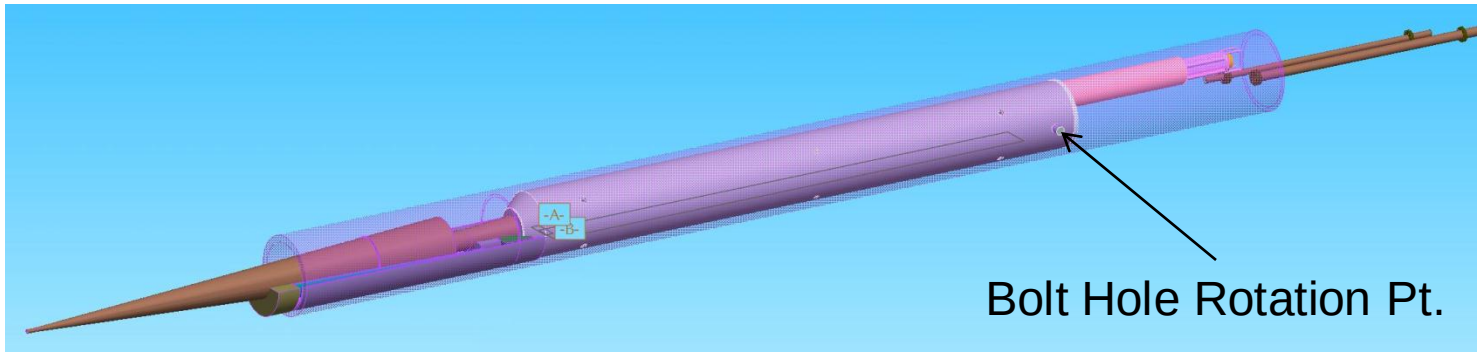

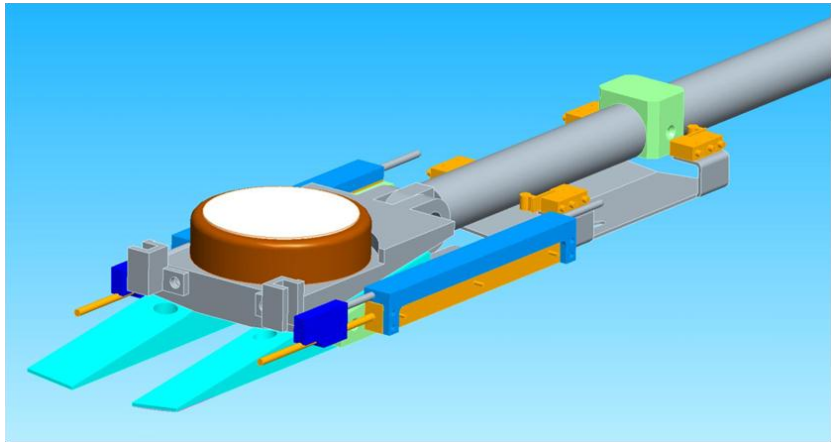

Bill Sporre/BNL

Support Tube/QD0 Radial Clearances

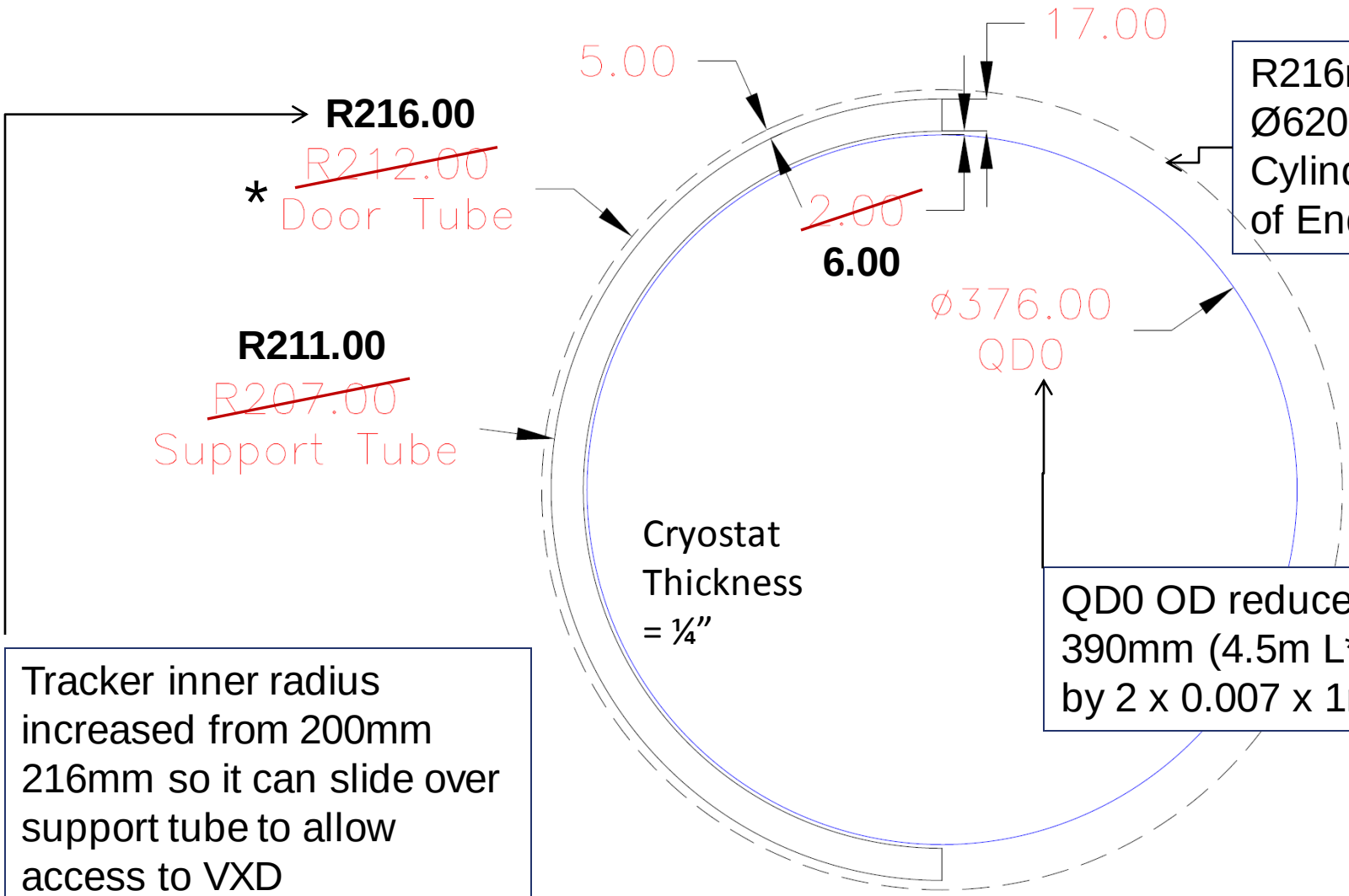

R216mm Hole in Ø620mm Fe Cylinder at center of Endcap Doors

QD0 OD reduced from 390mm (4.5m L* design) by 2 x 0.007 x 1m = 14mm

Tracker inner radius increased from 200mm 216mm so it can slide over support tube to allow access to VXD

Support Tube Analysis Weight Distribution

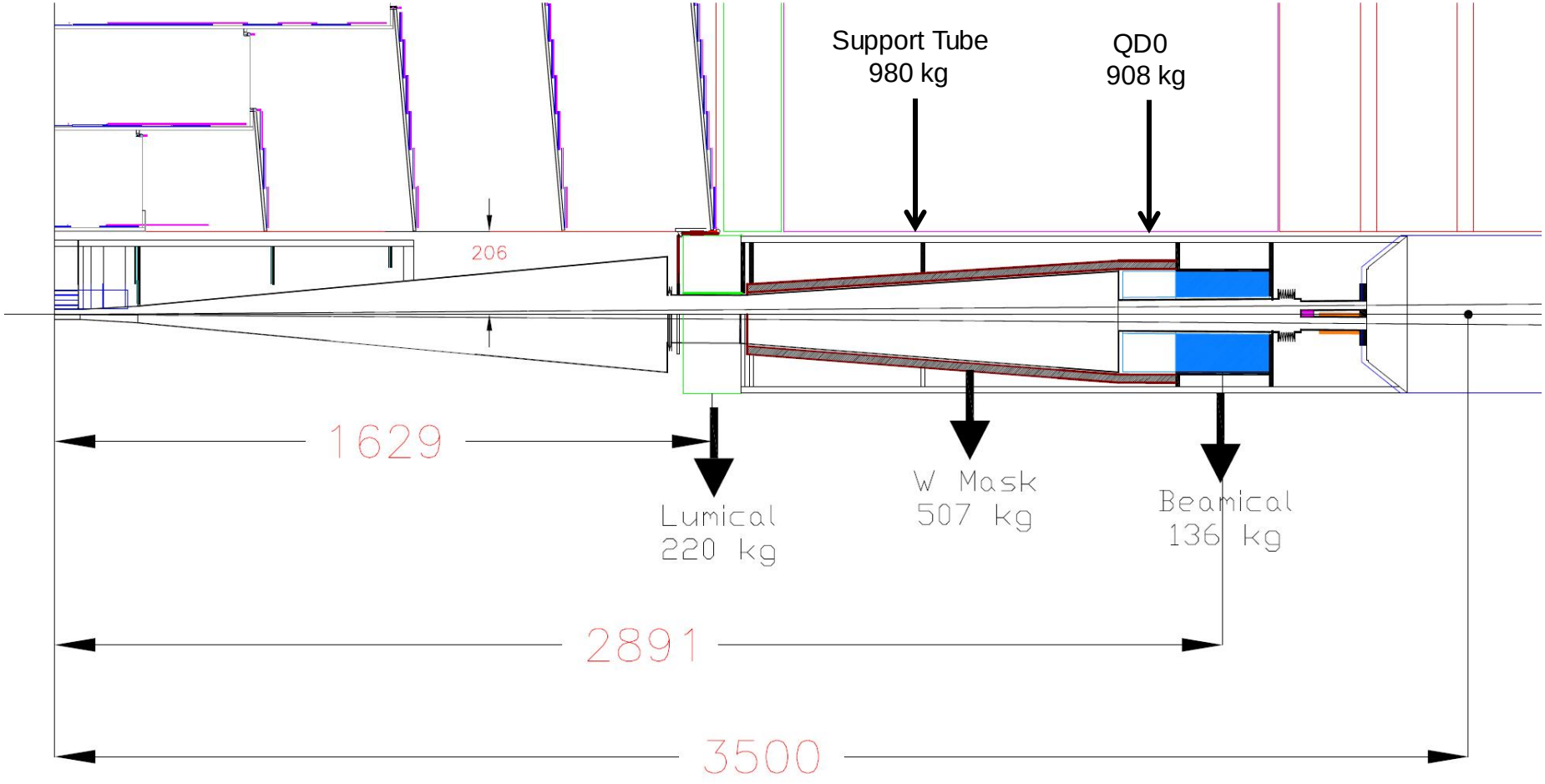

M. Oriunno/SLAC

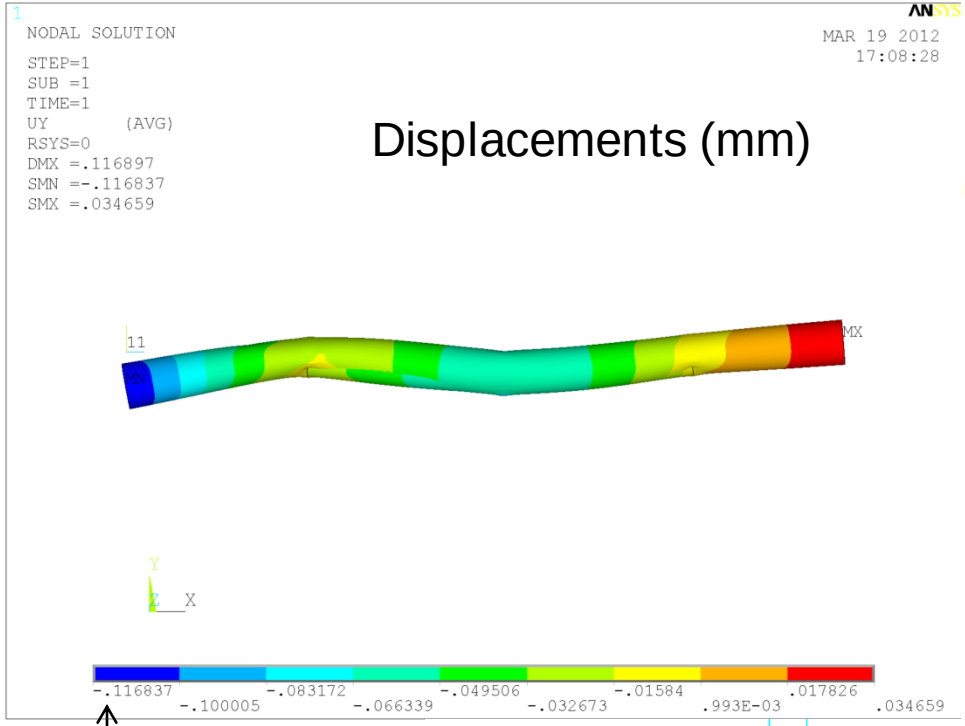

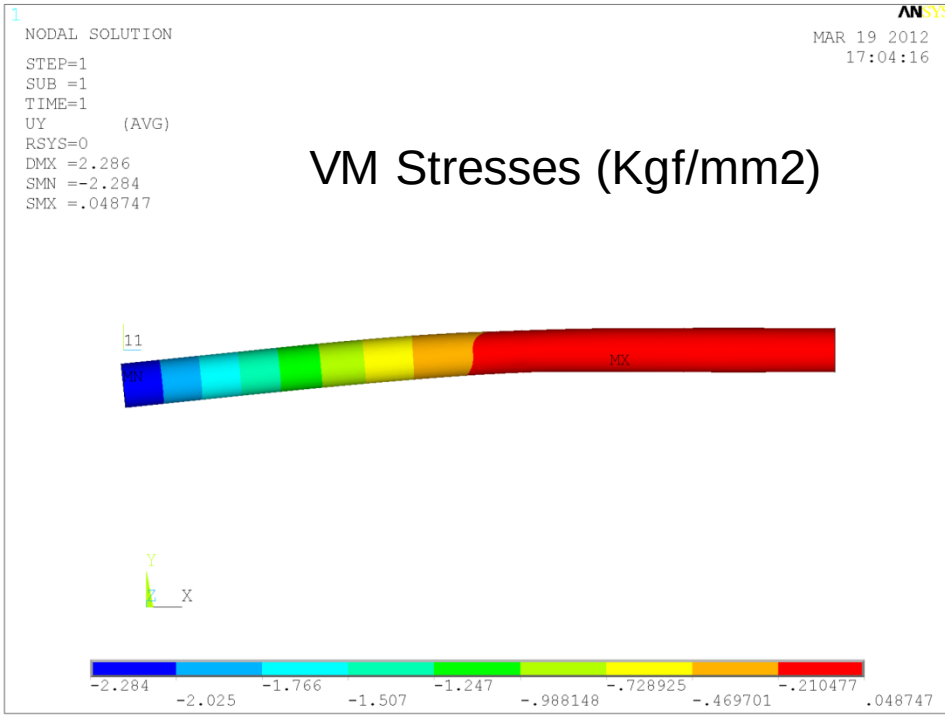

Door Closed:
100um deflection

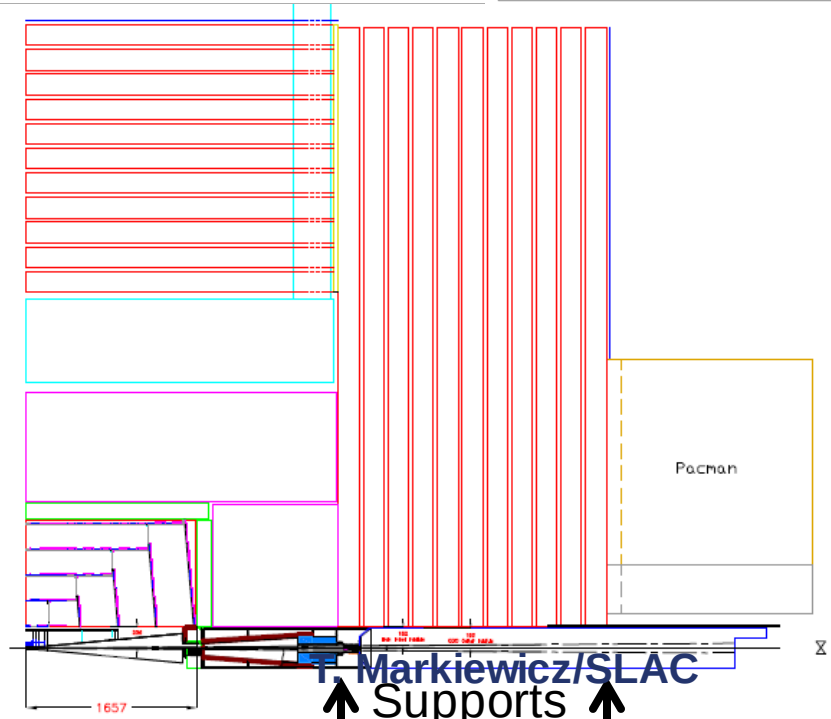

M. Oriunno/SLAC

T. Markiewicz/SLAC

Supports

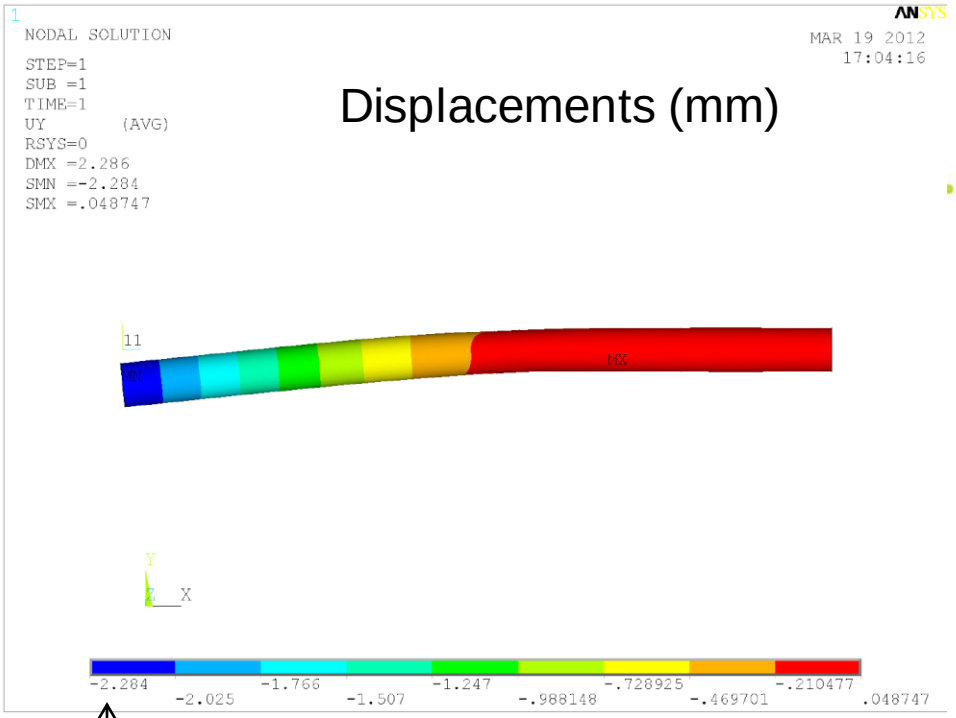

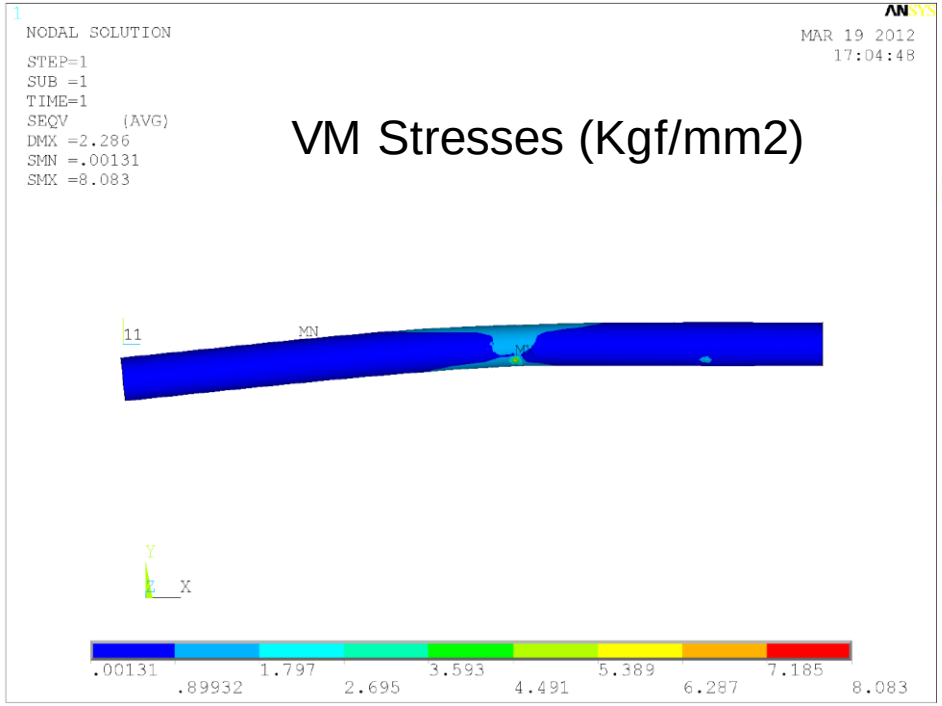

Door Open 2m:
2.2mm deflection

M. Oriunno/SLAC

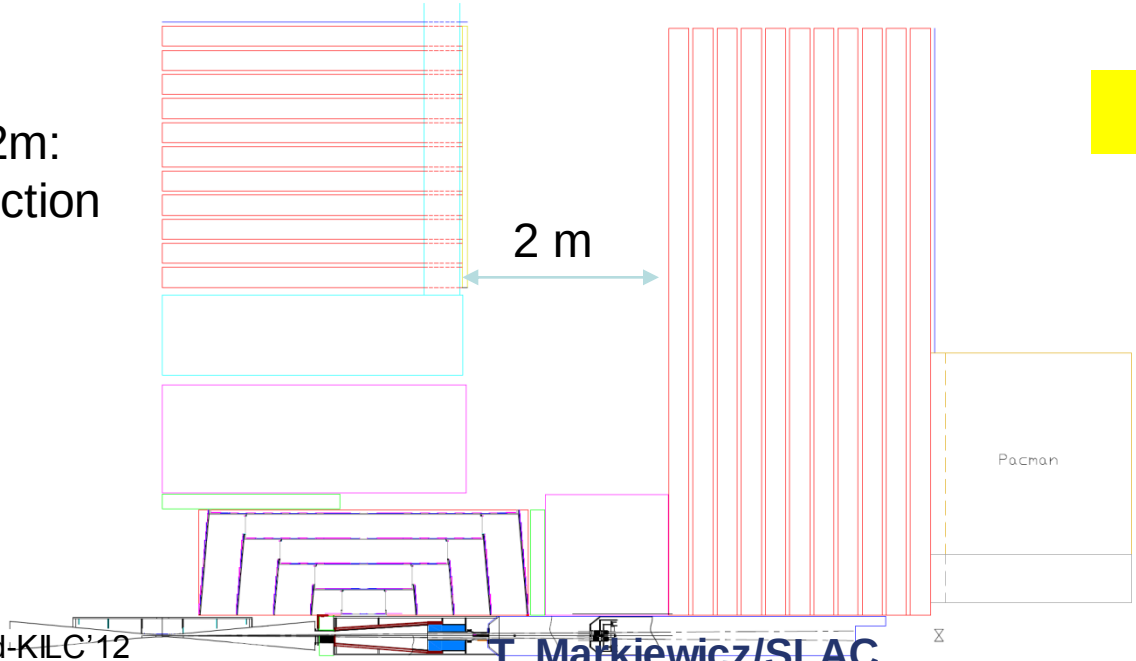

VXD

Tracker

Supports

T. Markiewicz/SLAC

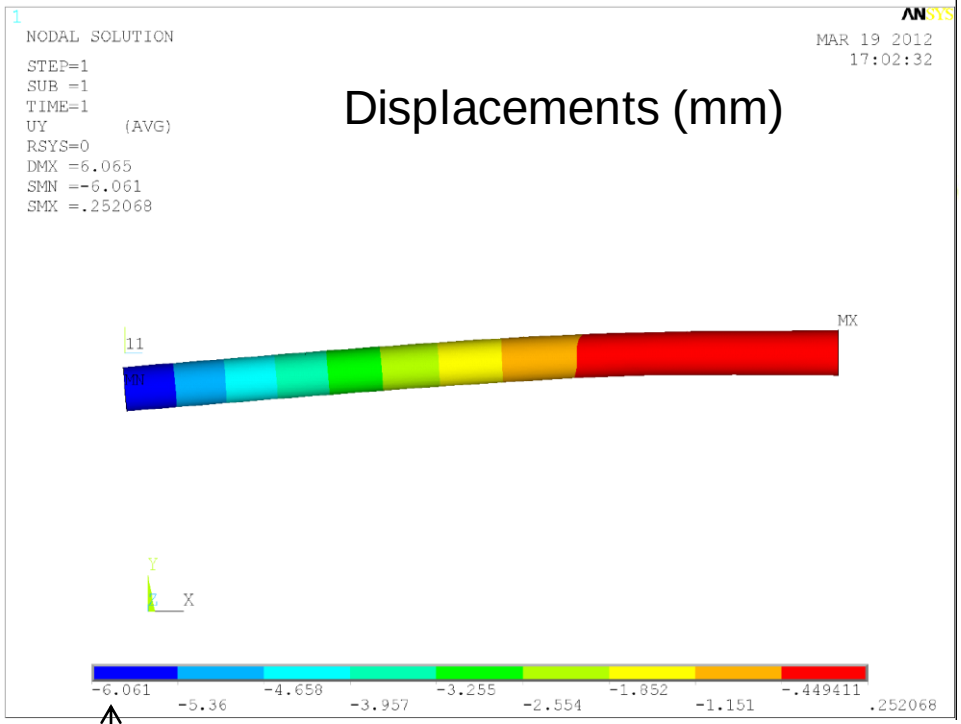

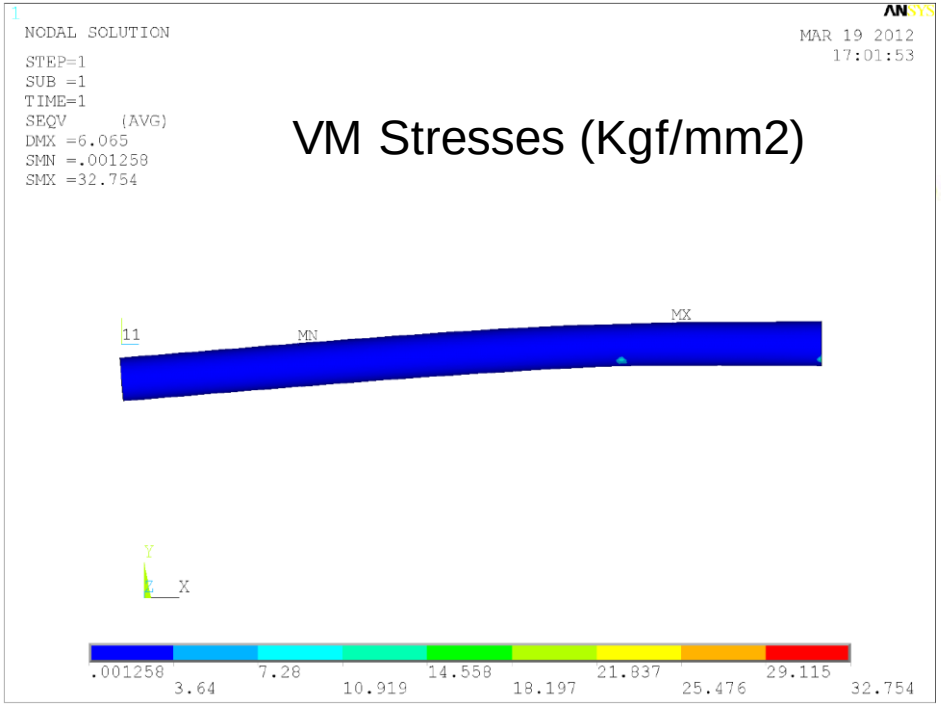

Door Open 2.8m:
6mm deflection

M. Oriunno/SLAC

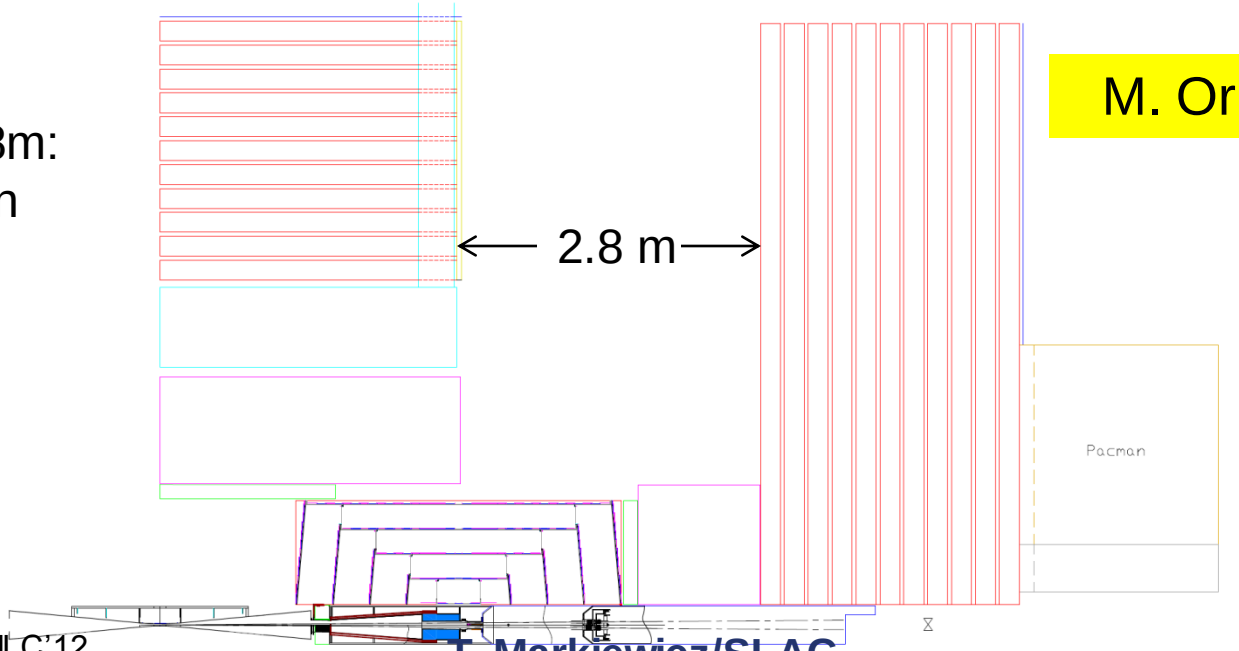

VXD Tracker Supports

T. Markiewicz/SLAC

Evolution of QD0-QF1 region

- Valve/Pump Out/RGA assemblies near QF1 end
- QD0 Service Line to 2K chiller extended maximally to rear
- Support tube behind QD0 extends to allow 2.8m door opening transitioning to a half-cylinder for access

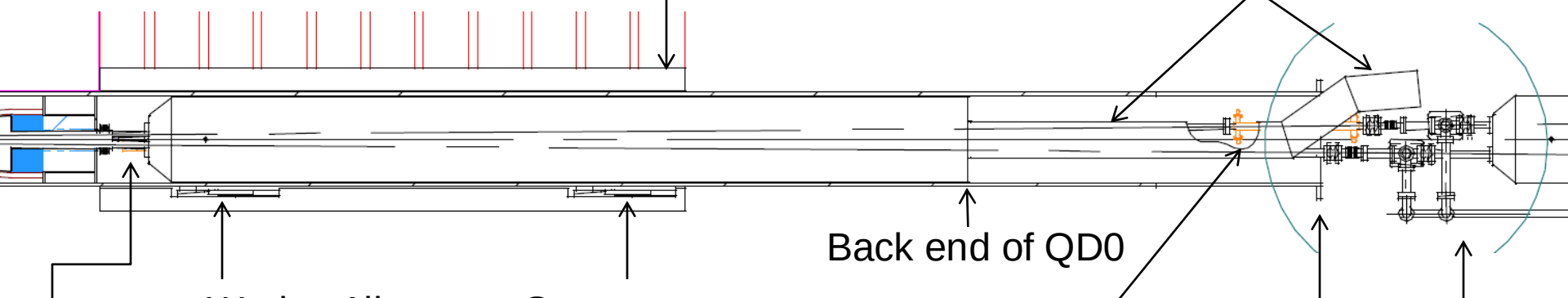

G. Anzalone/SLAC

Partially Complete 3D Model of Forward Region

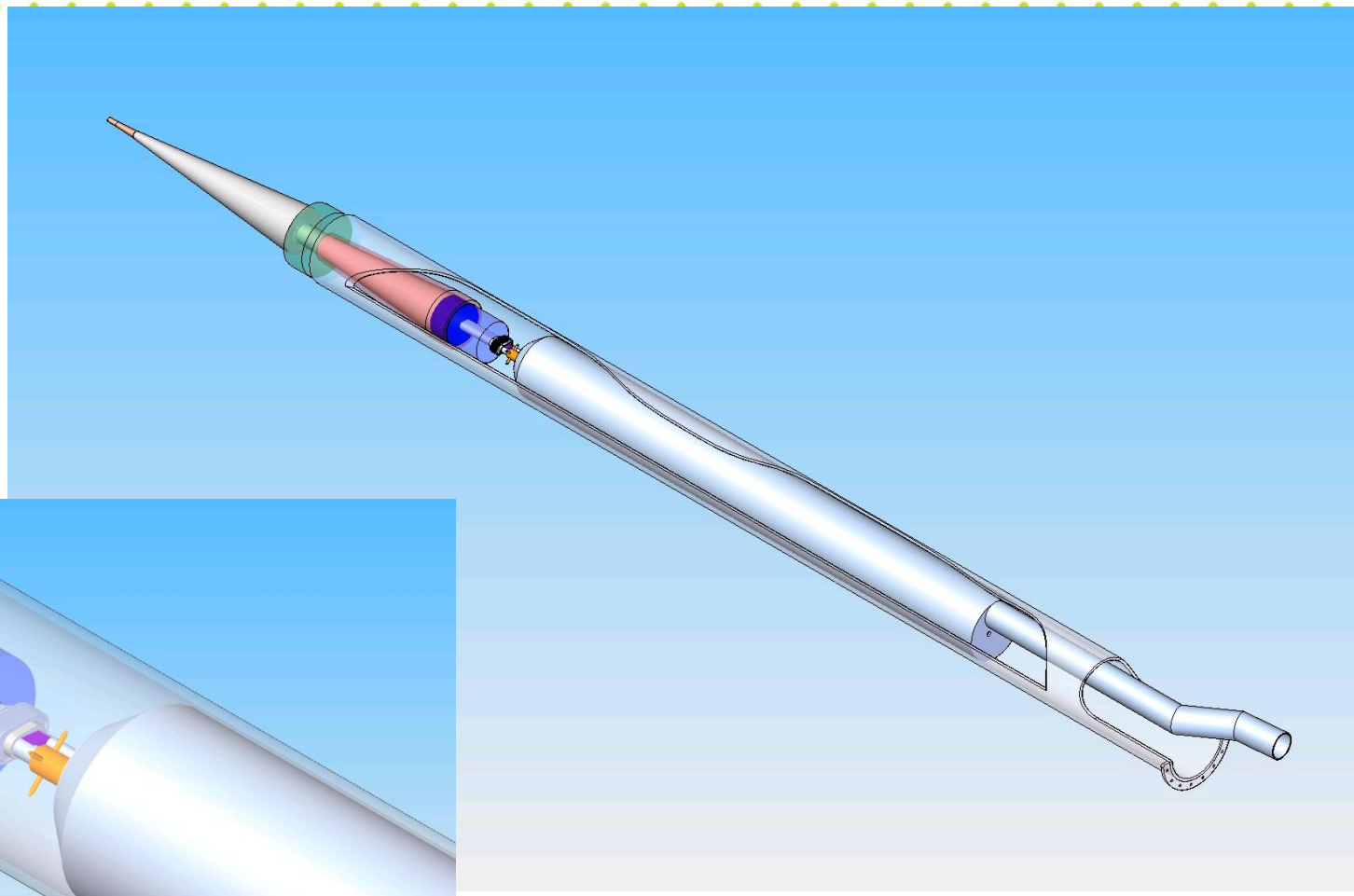

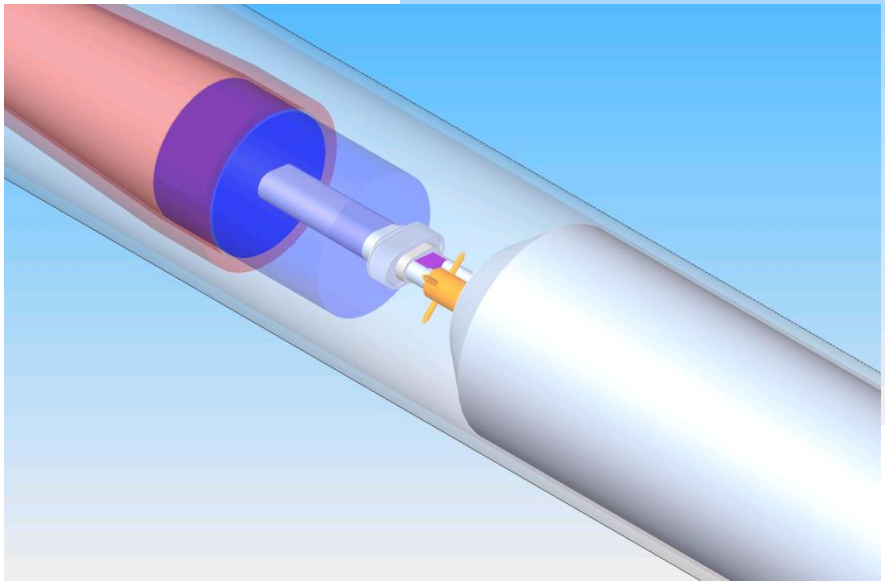

Plan & Elevation Views of Disconnect & Pumpout Valves

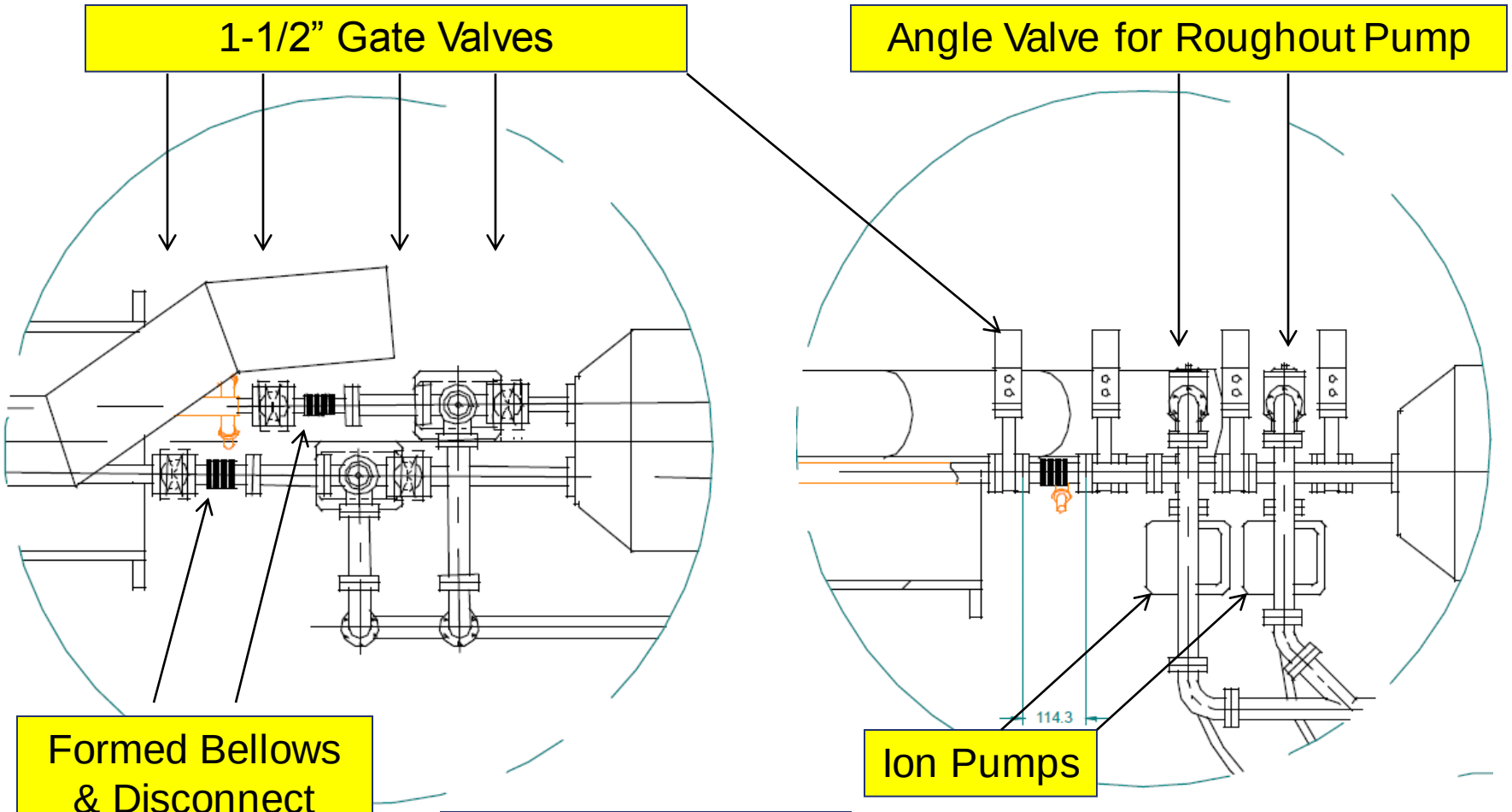

All Vacuum Parts from MDC Catalog

G. Anzalone/SLAC

Elevation View at 2.8m Door Opening

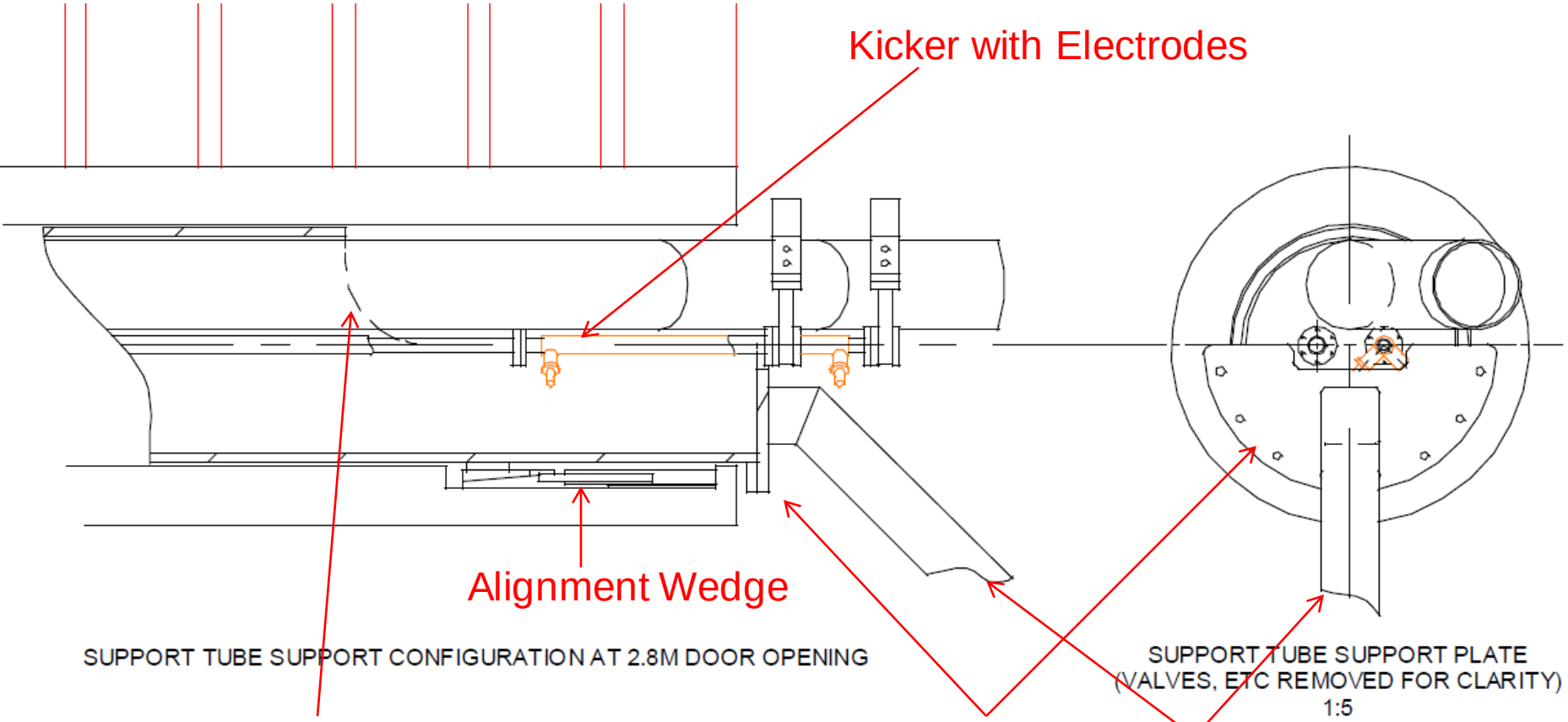

Support tube cut to semi-cylinder at rear

Semicircular plate and strut at end of support tube

G. Anzalone/SLAC

QD0 Wedge Design Concept

Total Pad Travel as is = .475in

Height of pad and distance of displacement will be changed pending analysis on sagging of beam line.

Conceptual design only at this point

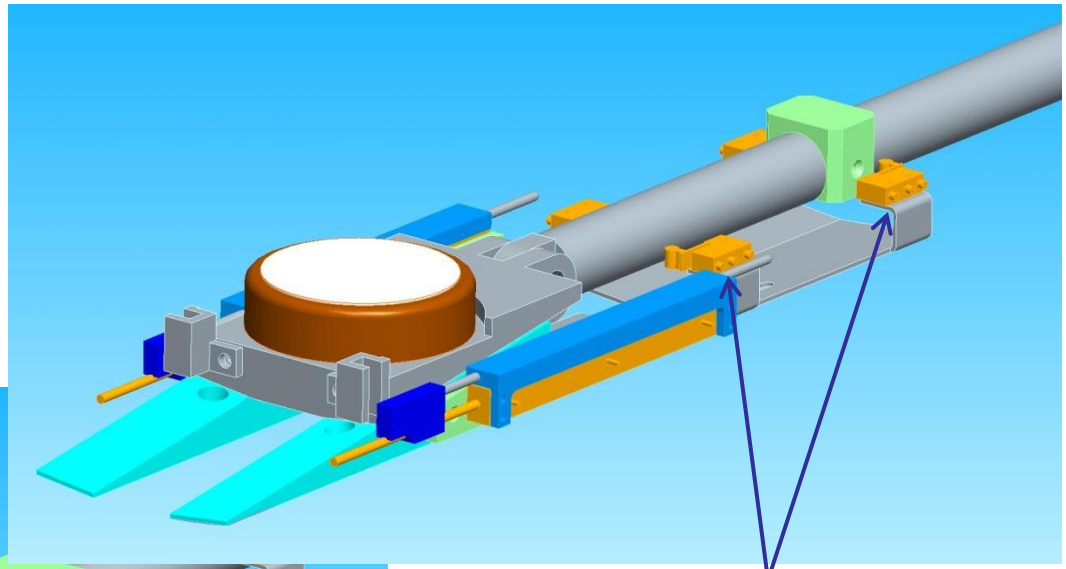

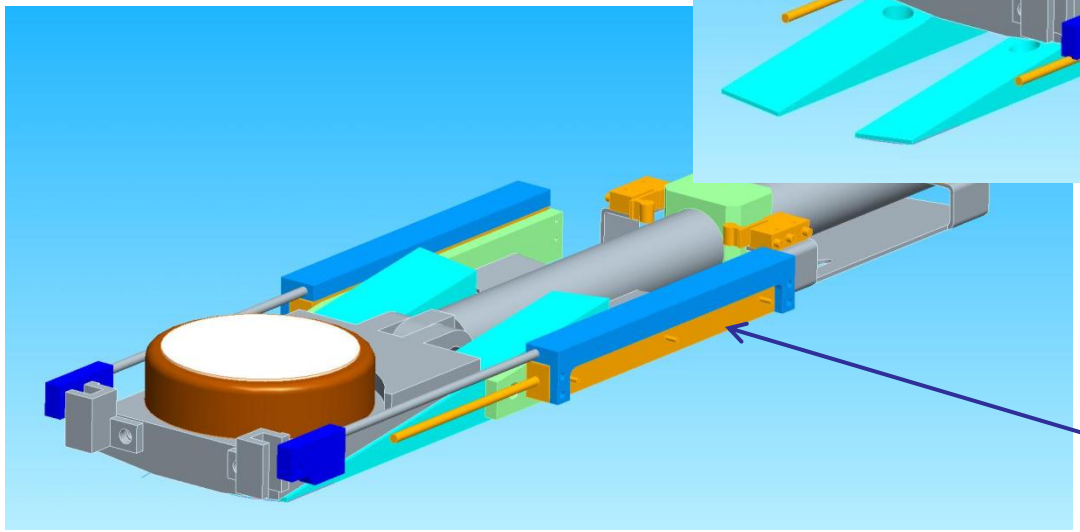

Bill Sporre/BNL

QD0 Wedge Design Concept

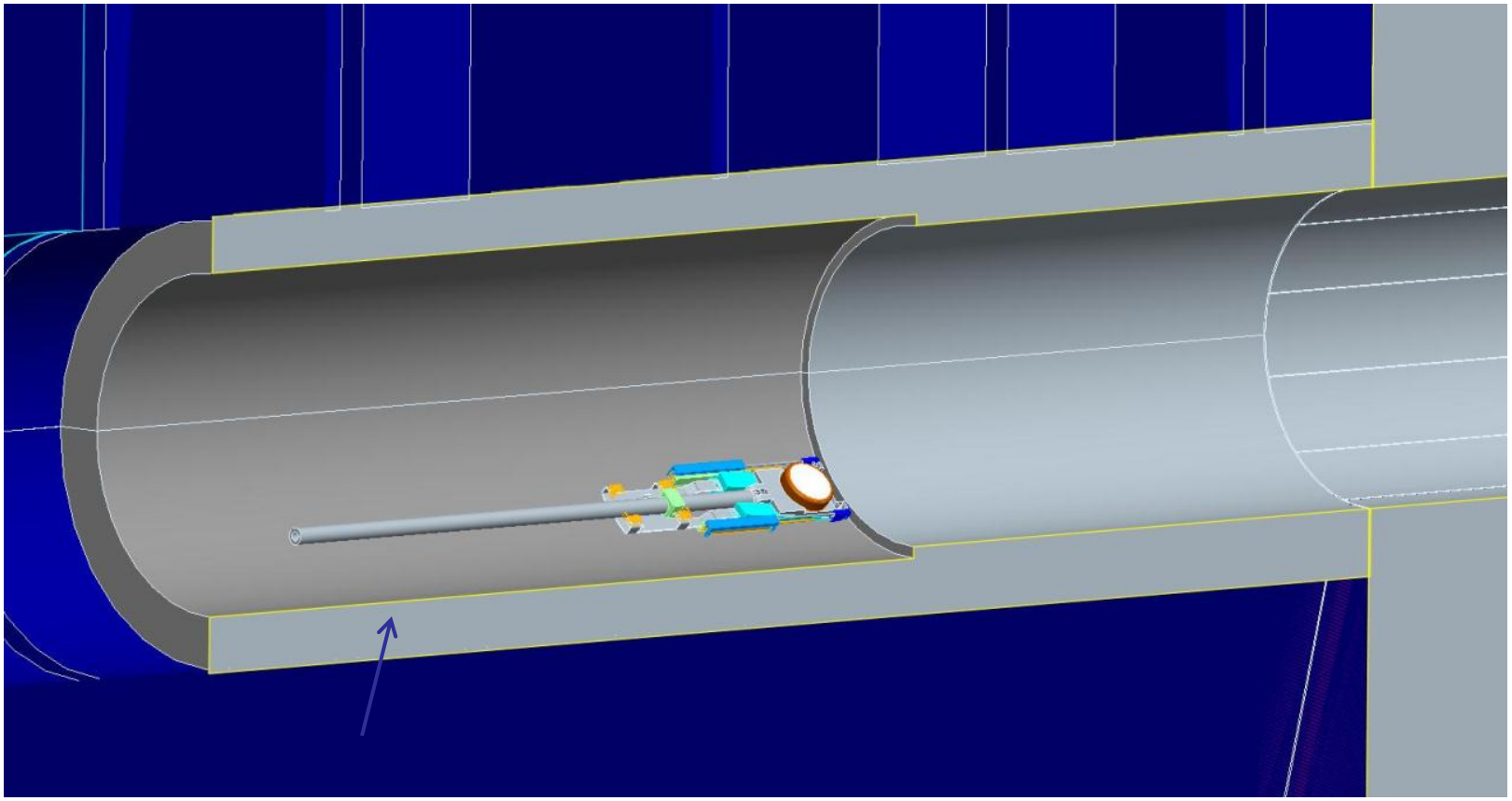

Bill Sporre/BNL

Wedge Alignment Mover

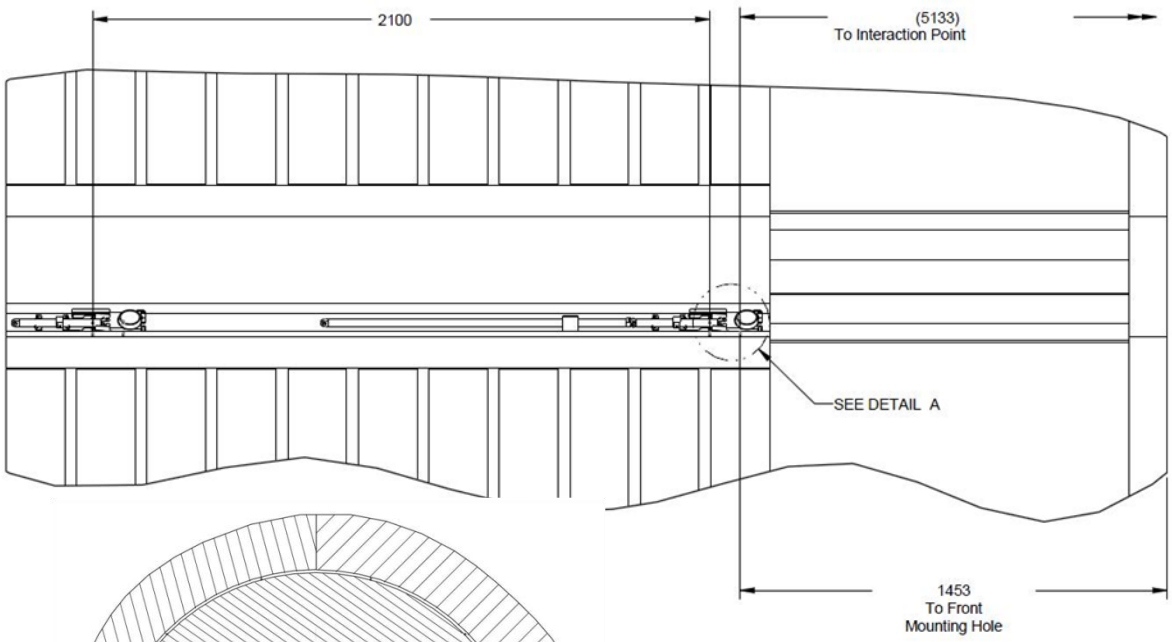

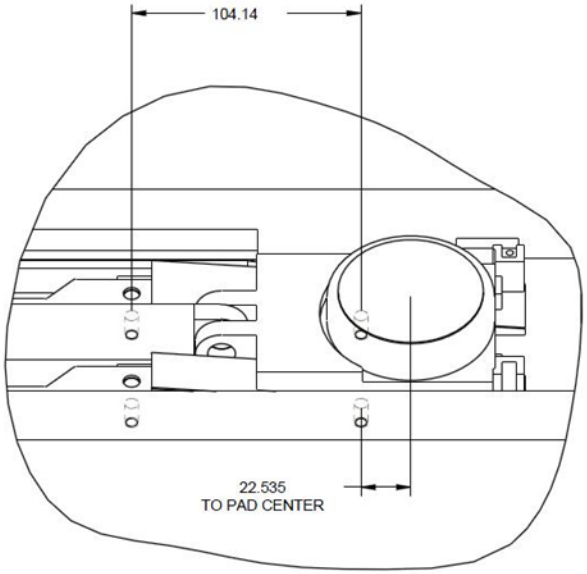

DETAIL A
WEDGE MOUNTING PROVISIONS

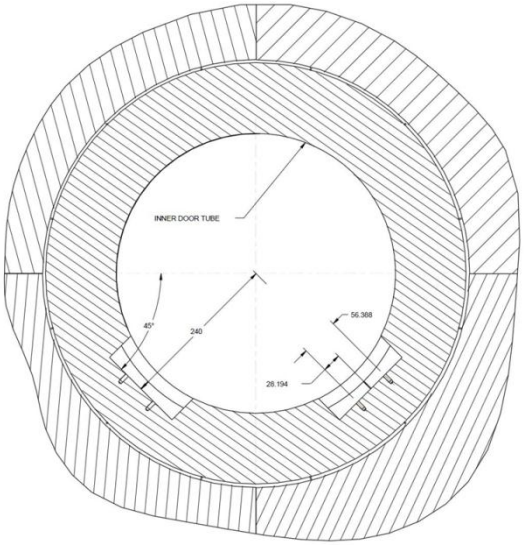

Motor & Drive Rod system not yet done

Bill Sporre/BNL

IP Vacuum

M. Sullivan/SLAC

- VACCALC: " A Method for Calculating Pressure Profiles in Vacuum Pipes", SLAC-PEP-II-APNOTE-6-94
  - The outgassing rate is taken to be 0.1 nTorr•l/s/cm^2.

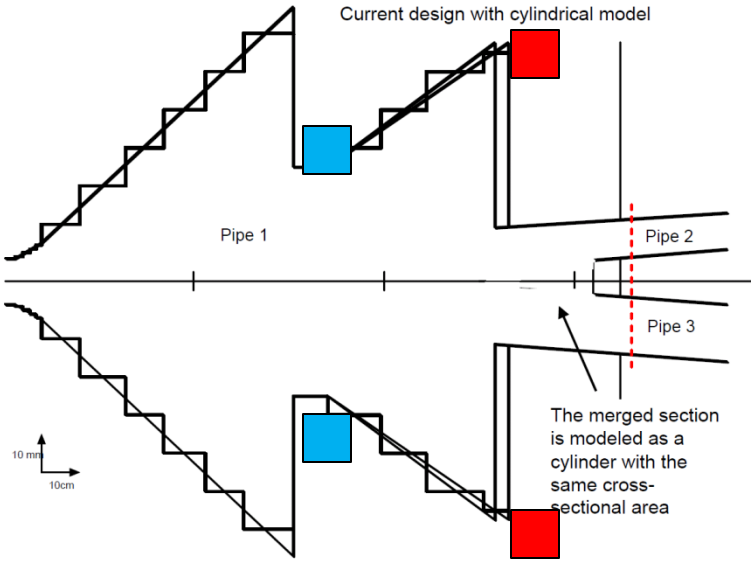

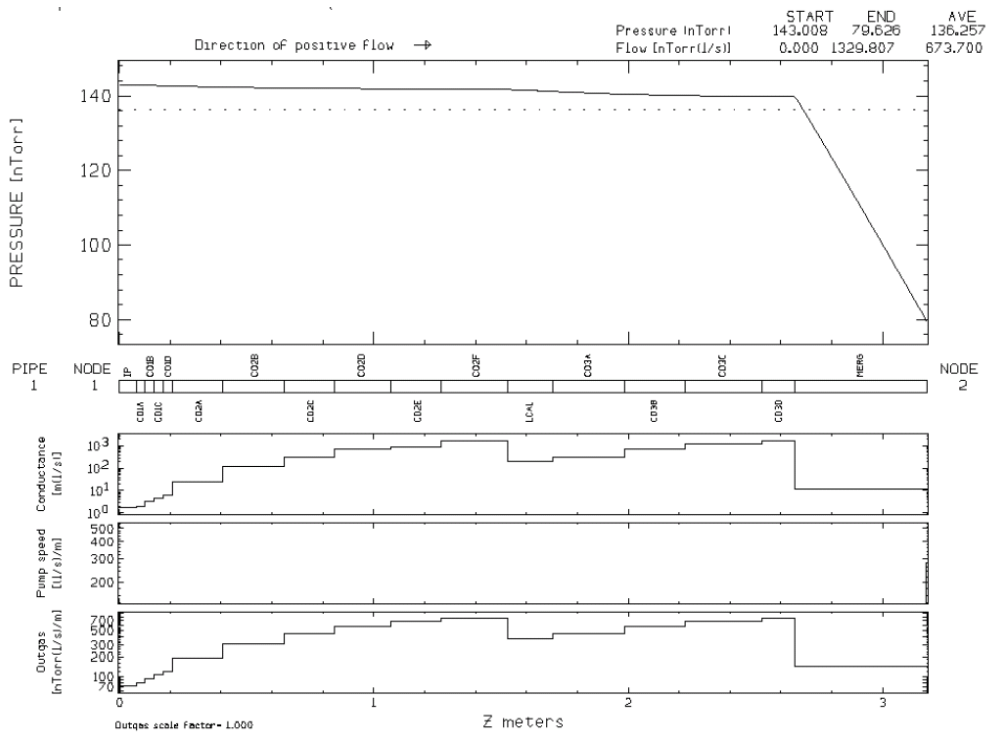

If cryo-pump only 136 nTorr

- If add 10 l/s pump 69 nTorr
- If add 20 l/s pump 46 nTorr

Vacuum Between QD0 and QF1

No Problem!

Assume the cryostat beam pipes have a total pumping of 500 l/s per cryostat

One 100 l/s ion pump for each pipe between the cryostats as drawn

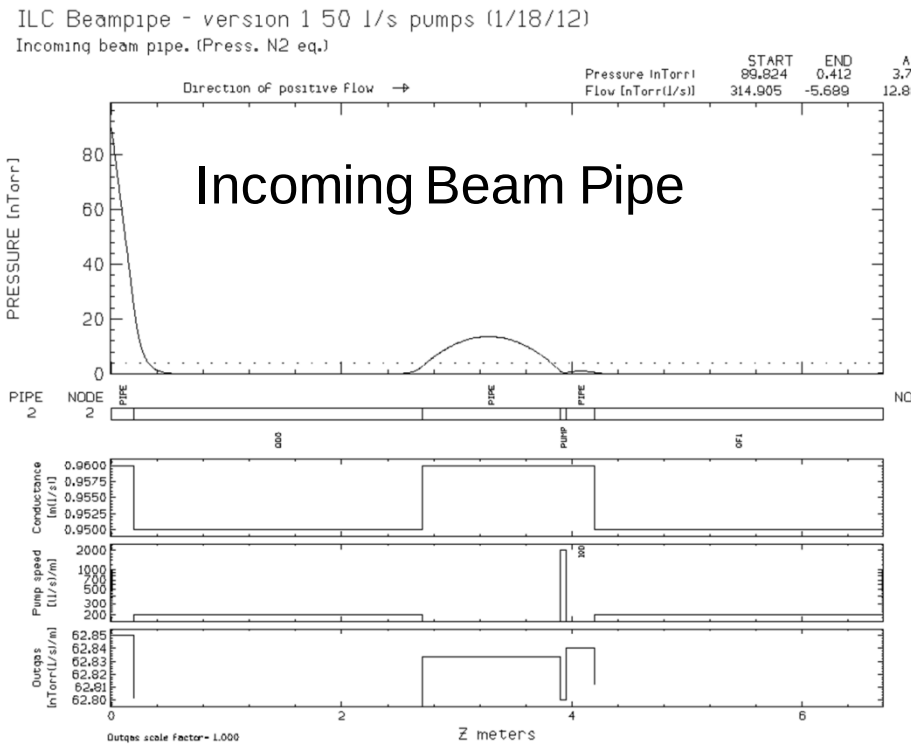

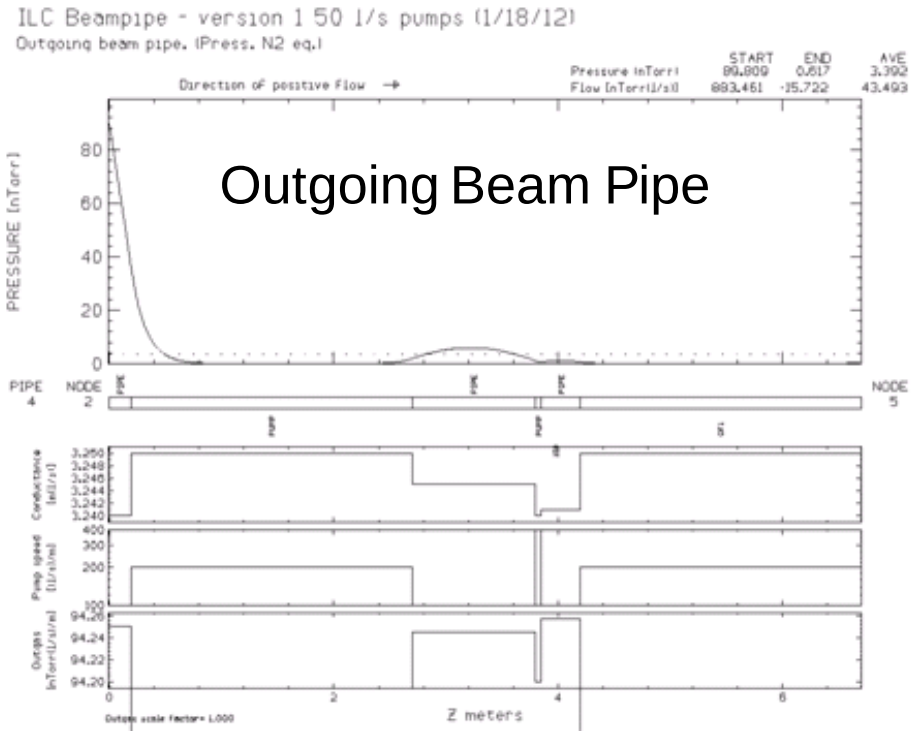

M. Sullivan/SLAC

Vacuum Upstream of FF Quads

Needs a Design!

Assume a 50 l/s ion pump every 2 m

20mm diameter beampipe
<p> ~ 23 nTorr

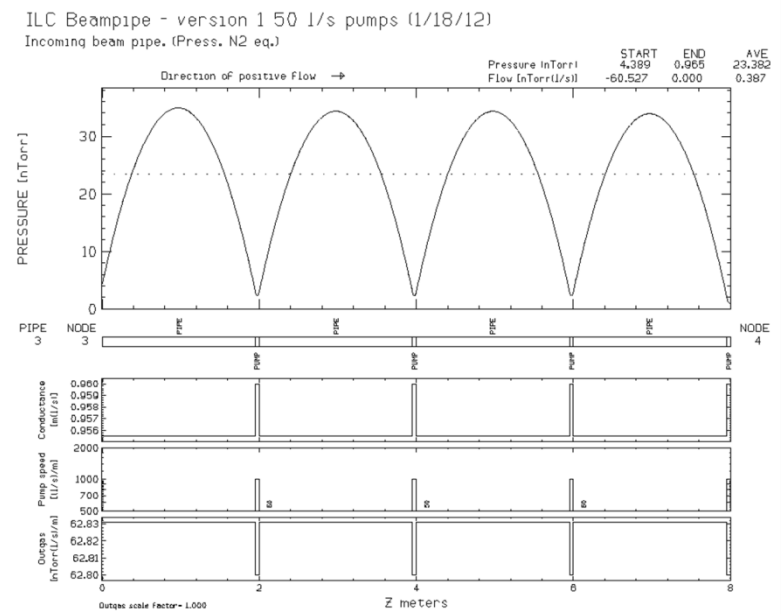

Add distributed pumping
Antechamber, pumpscreen, NEG, …

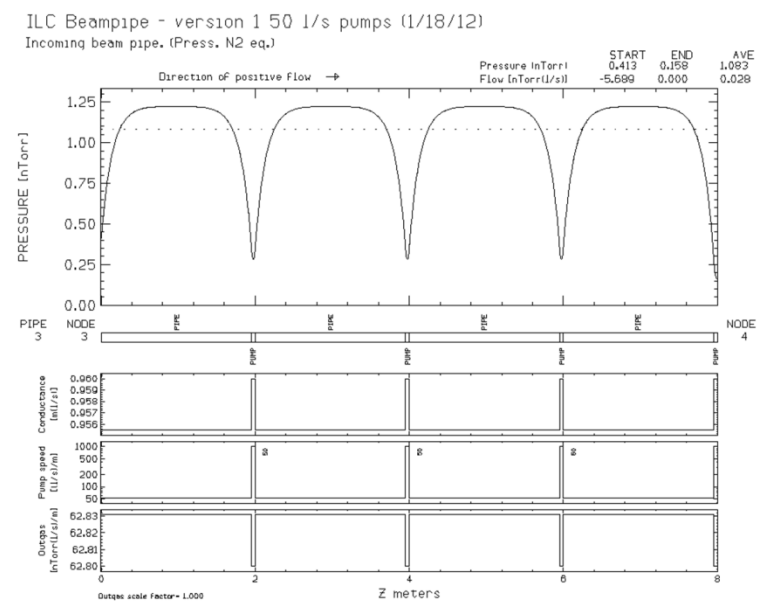

And/or: Larger diameter beampipes, heater tapes to lower outgassing rates, etc.

M. Sullivan/SLAC

Beam-Beampipe Interaction at the IP and in QD0

Beam-induced wakefields result in power loss due to trapped higher order modes and resistive wall heating

These have been calculated by A. Novokhatski for the current IR geometry using MAFIA and NOVO codes:

See: http://ilcagenda.linearcollider.org/materialDisplay.py?contribId=2&materialId=slides&confId=5596

Effects are very dependent on exact geometries, materials, shielding schemes and contact resistance

Sasha Novokhatski/SLAC

Wakefields and Bunch field as beam passes BEAMCAL and LUMICAL

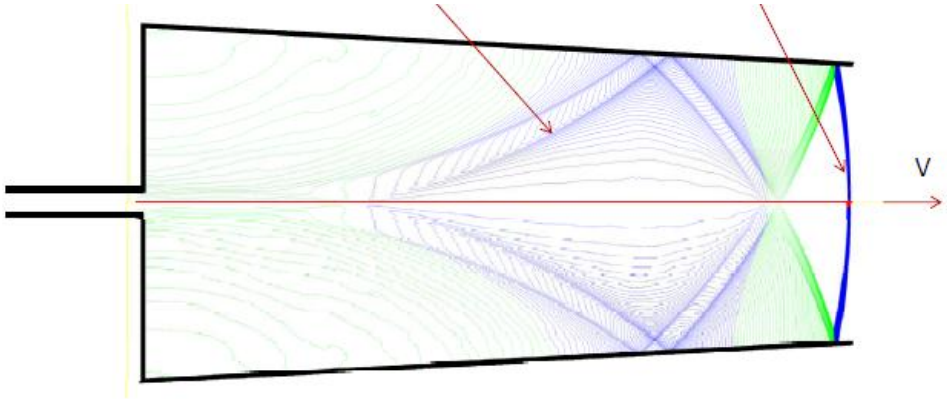

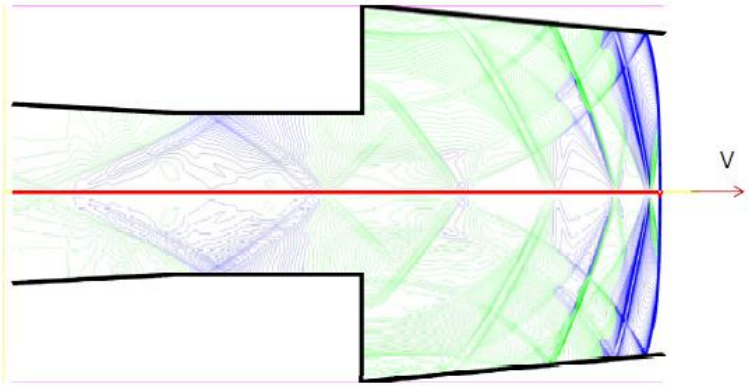

Summary of HOM Heating at IP

- Average power of the wake fields excited in IR is around **30 W** for nominal parameters (6 kW pulsed)
  - **90% from modes excited in pipe (geometry (R/Q) & frequency dependent)**
  - **10% from resistive wall heating**
- In the QD0 region there is an additional ~4W from resistive losses in the pipes and wakefields, excited by pipe diameter changes, due to the shielded bellows
  - **Flange edge size, contact resistance, coatings important**
- Heating from BPMs and kickers must be added

Full 3D LOI Beam Pipe (no bellows, flanges, or pump ports included)

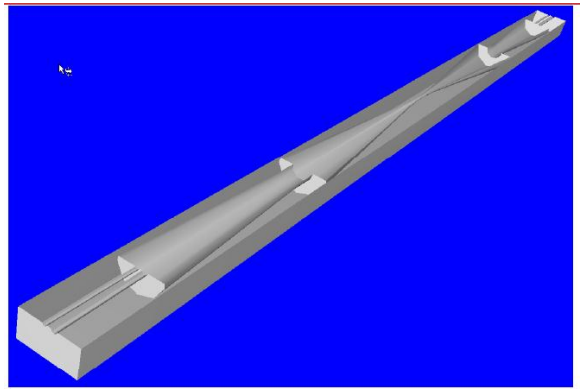

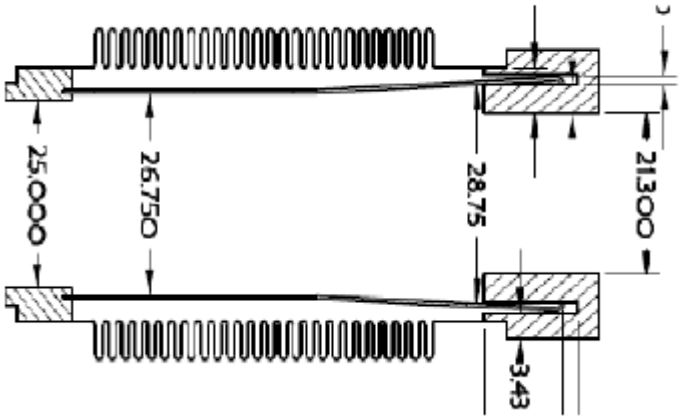

Sasha Novokhatski/SLAC

Summary of SiD Forward Status

- The 2009 LOI **conceptual** design of the SiD Forward Region has been improved to an appropriate level for the DBD.
- Much more work needed