lcsim: Simulation and Reconstruction

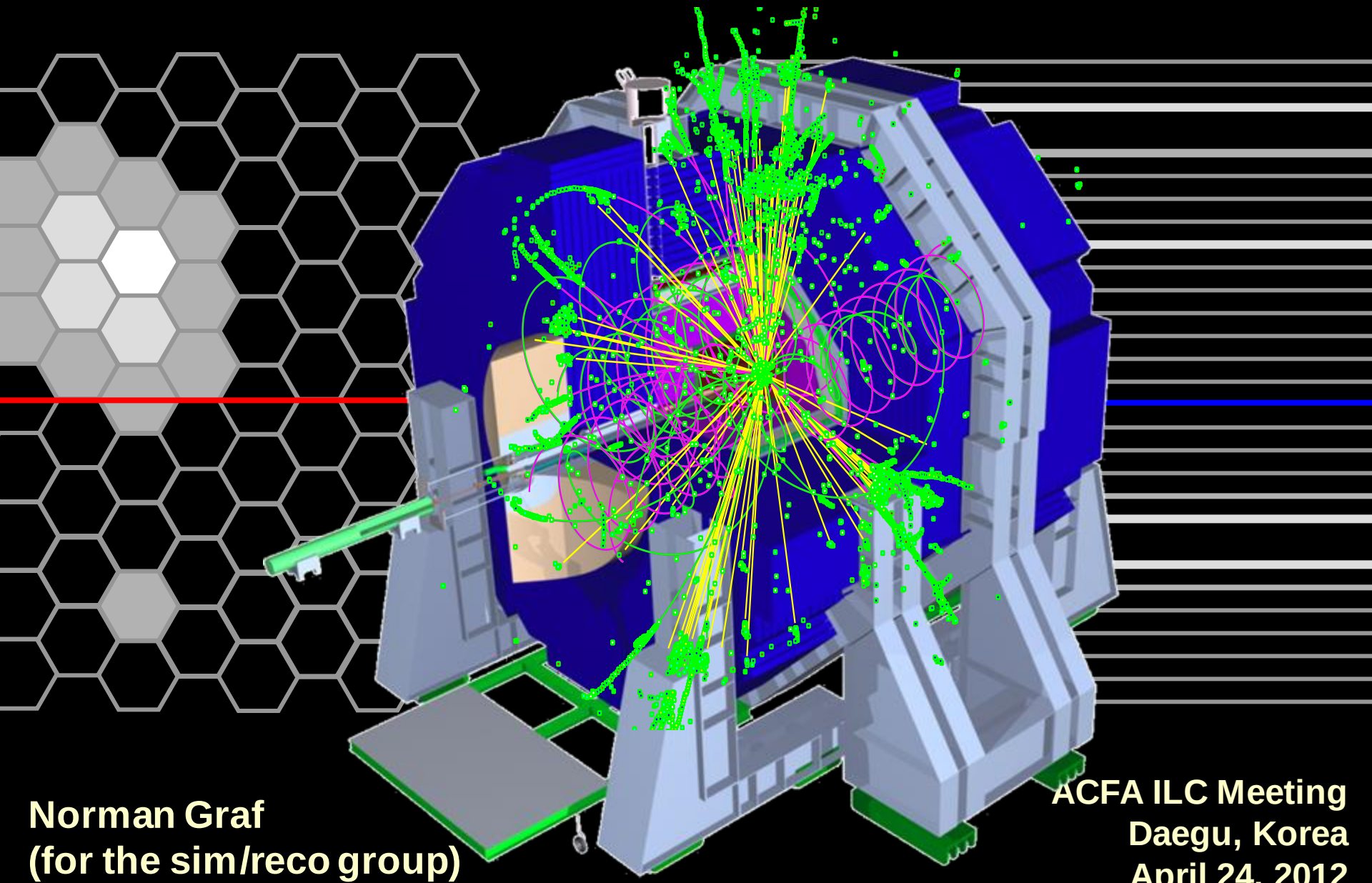

Norman Graf
(for the sim/reco group)

ACFA ILC Meeting
Daegu, Korea
April 24, 2012

DBD Goals for 2012

- Finalize global system design via detector performance optimization using physics analyses.
- Incorporate latest detector R&D results.
- Incorporate latest engineering designs.
- Improve and understand tracking, PFA and flavor-tagging reconstruction.
- Automate & streamline production sim/reco.

Detector Development Process

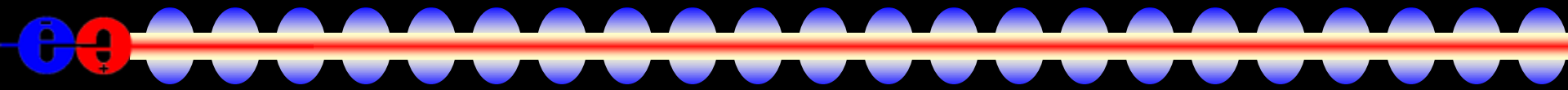

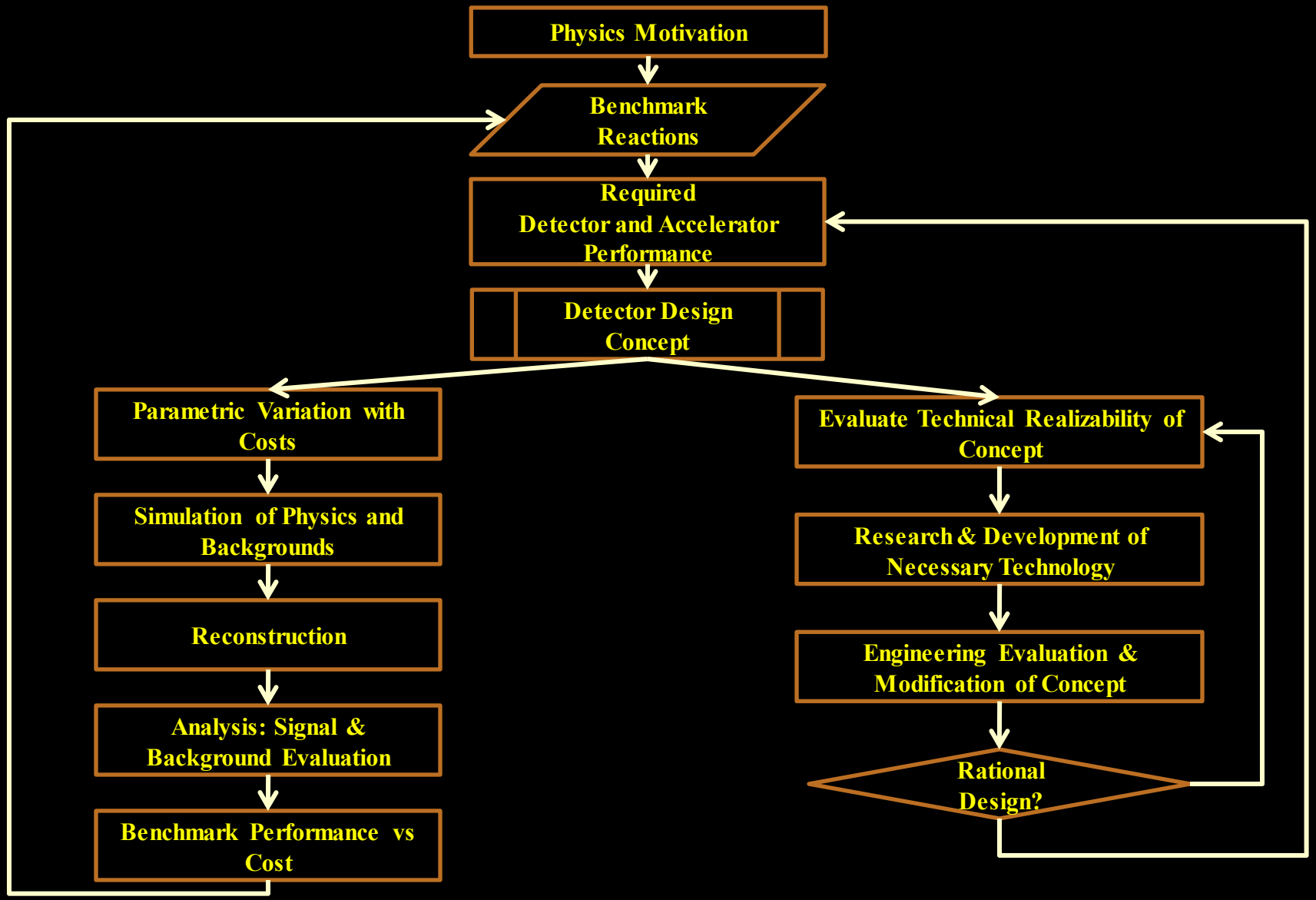

Framework Overview

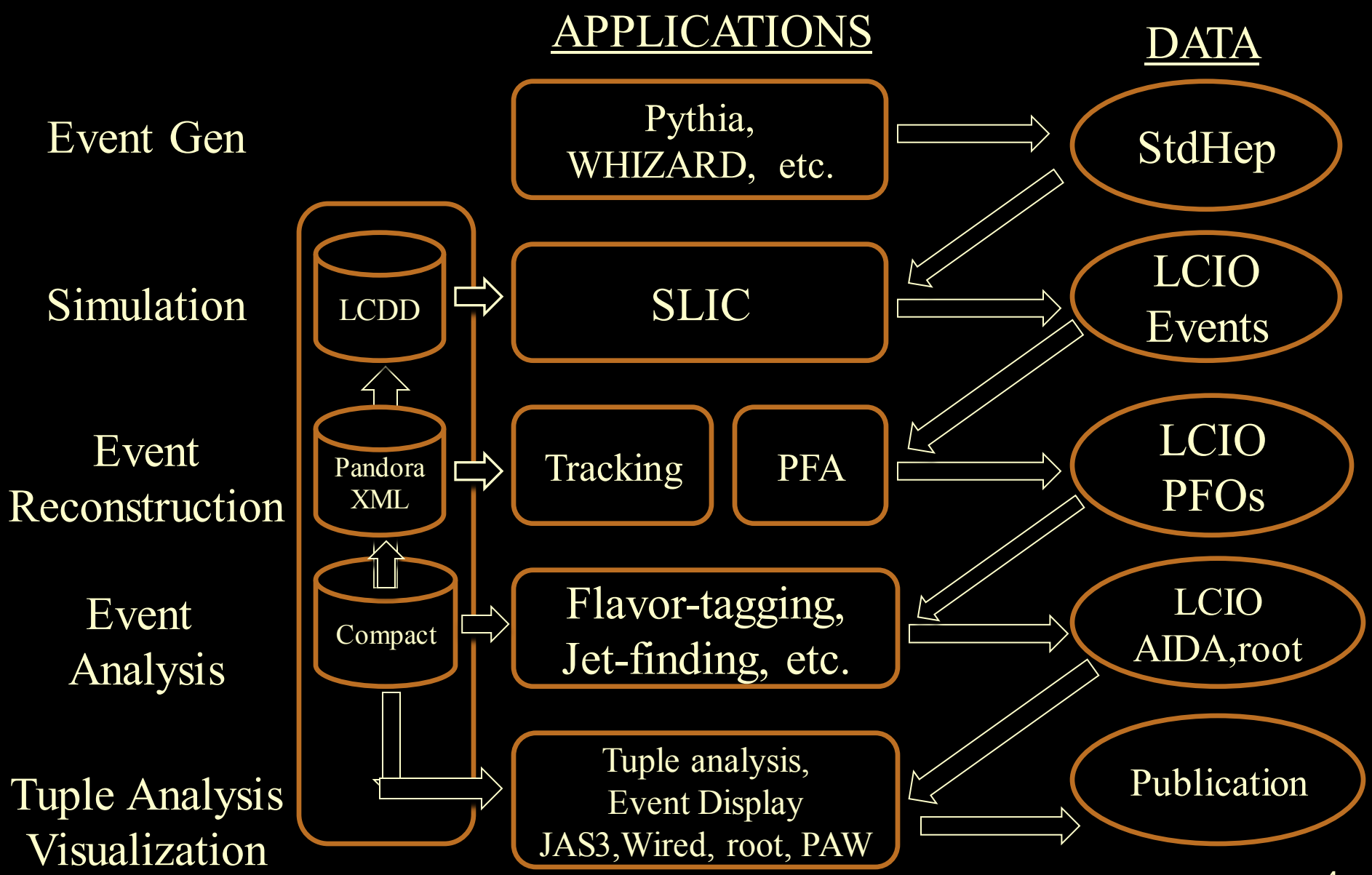

Event Generation

- Common superset of events in stdhep format have been generated for ILD & SiD.
  - Stored and cataloged on the Grid.
- Would have liked to use a common set of events for the full detector response simulation, but this seems not to be possible.
- SiD will create set of files with 80%/20% e-/e+ polarization for signals, SM and machine backgrounds.
- These samples will also be made available for Snowmass 2013 studies.

slic updates

- Testing Geant4 9.5
- If requested, store and save calorimeter hit positions within cells to enable more refined hit calculations.
  - Will be used to study RPC charge-sharing code.
  - Can write out each individual calorimeter hit in sensitive layers, but creates large output files, would like to integrate into slic.
  - Also working to define efficient time history for cal hits.

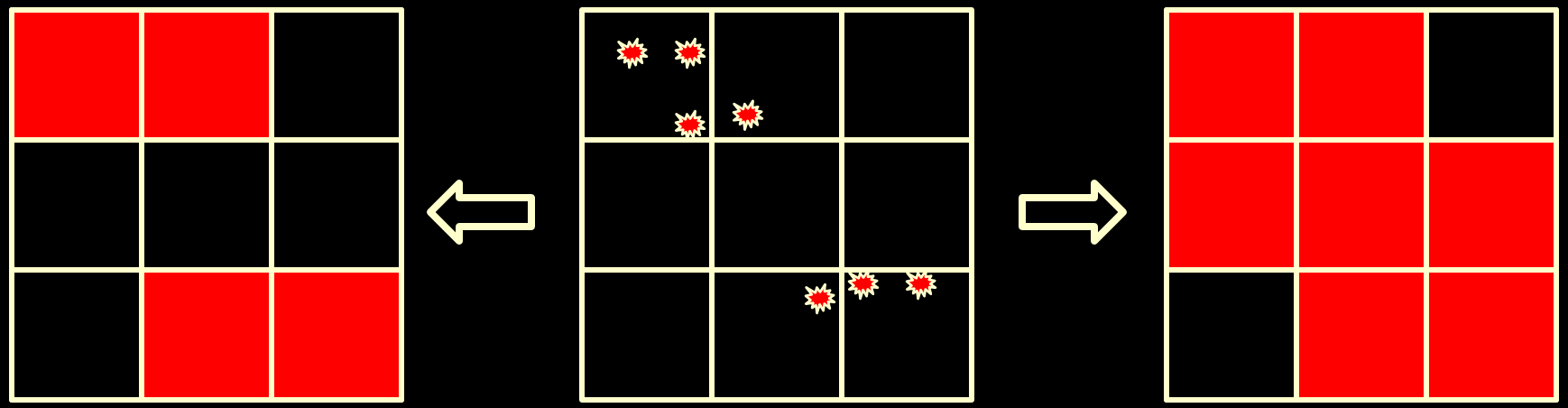

org.lcsim Calorimetry

- RPC response will be improved to account for charge sharing across readout pads, electronic noise and inefficiency.
  - Algorithms will be implemented in reconstruction software, may be migrated to simulation software if deemed appropriate.
- GEM and Micromegas responses will also be modelled.
- Scintillator response will still be supported, input from CALICE on uniformity, etc. will be used.

org.lcsim Tracking I

- TrackerHit classes will make use of new LCIO classes which support 1D and 2D hits on planar surfaces.
- Track will incorporate new TrackState classes.
  - Existing collections will be moved.
- Improvements in silicon pixel response simulations.
- Incorporate non-prompt tracking into the standard reconstruction and used for V finding?
- Implementing track finding based on 3D hits.

org.lcsim Tracking II

- Work ongoing to implement existing Kalman Filter code into standard reconstruction stream.
  - Extrapolator will be used to calculate TrackStates at Calorimeter face and at the dca to the IP.
  - Should resolve existing deficiencies in track fits.
- Work ongoing to improve overall tracking simulations, lower priority but also useful to other end users.
  - Effects of field map will be investigated.
  - Runge-Kutta stepper code being adapted.

Track Finding: ftf

- Using a conformal mapping technique
  - Maps curved trajectories onto straight lines
  - Simple link-and-tree type of following approach associates hits.
  - Once enough hits are linked, do a simple helix fit
    - circle in r-phi
    - straight line in s-z
    - simple iteration to make commensurate
- Use these track parameters to predict track into regions with only 1-D measurements & pick up hits.
- Outside-in, inside-out, cross-detector: completely flexible as long as concept of *layer exists*.
- Simple fit serves as input to final Kalman fitter.

Track Fitting: trf

- Provides complete infrastructure to define a tracking detector based on surfaces
- Native support for 1D, 2D and 3D hits
- Propagators (analytic as well as RK)
- Interactors (Eloss & MCS)
- Kalman Filter Fitter

Tracking Updates

- PixSim provides an extremely capable silicon response simulation package.
- trf toolkit contains a well-tested detector model, track & hit classes and Kalman filter fitting code which accounts for energy loss and MCS.
- ftf toolkit provides a fast, efficient, pattern recognition package based on a conformal mapping of hits on topological layers.
- All available from lcd cvs repository.

slicPandora

- slicPandora was successfully used to simulate the response of SiD' (clic_sid_cdr) for the CLiC CDR.
  - Need to study performance with digital SiD HCal, especially after including improved RPC response.
- Number of improvements have been made recently
  - internal restructuring to provide more flexibility in defining input LCIO collections
  - accommodation of changes to pandoraPFA itself
- Need to understand, characterize and optimize selection of algorithms and their ordering.

Vertexing

- LCFIVertex has been used for the LOI and CDR to provide secondary vertex identification and jet flavor tagging.
- Following new developments in LCFIVertexPlus and adopting to them as necessary.
  - not being jet-based offers promise of improved performance in multi-jet environments.
  - will require some changes in how events are processed.
    - best to be involved from the beginning.

Detector Optimization

- Not yet settled on final SiD version to be used for the physics benchmarking.
- Some detector optimization studies undertaken.
- In addition to the baseline, some alternatives to be studied.
  - Will not perform all the benchmarks with all the variants.
  - May only perform subdetector performance characterization for some detectors.

Detector Design

- Baseline:
  - sid_dbd : LOI geometry with more realistic detector descriptions (~sidloi3).
- Option 1:
  - sid_dbdopt: Detector optimized for 1TeV operations.
- Option 2:
  - sid_dbdspt: Silicon Pixel Tracker option.
- Option 3:
  - sid_dbdsci: Analog scintillator HCal
- Others?

Detector Optimization

- First iteration of optimization ongoing.
  - sidloi3 HCal +/- 1λ
- Processed $e^+e^- \rightarrow WW \rightarrow qq'\mu\nu_\mu$, $ZZ \rightarrow q\bar{q}\nu\bar{\nu}$ through full simulation. reconstruction, analysis chain using grid tools.
  - Use W/Z separation as performance metric.
- Useful debugging exercise, thanks to the efforts of Jan, Stephane, Philipp and Jeremy.
- Detectors to be frozen soon and production simulation to start.

The Grid

- SiD intends to make full use of Grid Storage Element and computing resources for the DBD detector response simulation and physics benchmarking exercise.
- Full tool chain using Dirac has been developed and successfully used to complete the CLiC CDR exercise.
- Identifying OSG resources.
- Need to run full sim/reco chain on small sample of benchmark events to identify scope of resources needed.

DBD Deliverables

- Results expected for inclusion in DBD
  - Full simulation of realistic detector design including support structures.
  - Overlay of correct admixture of expected beam-related backgrounds.
  - Full tracker hit digitization and ab initio track finding and fitting.
  - Digital RPC signal simulation, including cross-talk, noise & inefficiencies.
  - Full reconstruction using slicPandora & LCFIVertex (LCFIPlus if available)

Benchmarking: Common

- 2-4-6-8 fermion SM Background:
  - MC event generation is complete.
  - ee→2f and ee→4f were generated at DESY;
  - ee→6f, high pT γγ→2f, γγ→4f, eγ→e+2f, eγ→e+4f were generated at SLAC
  - ee→ttbb & ttZ 8f backgrounds were generated at KEK.
- low pT, high cross section γγ→hadrons have been generated at SLAC
- γγ mini-jet events (high pT subprocesses involving quark & gluon constituents of photons) will be generated at SLAC for the DBD
- ννH and ttH signals:
  - DBD generation was completed at SLAC and KEK, respectively.
- The WW signal was generated when the ee→4f background was generated at DESY; alternate initial state polarizations and anomalous TGC's will be simulated through reweighting.
- All MC event generation stdhep files are stored on the grid with an ftp accessible copy on SLAC NFS.

Benchmarking:SiD

- The MC event generation stdhep files - each of which are generated with 100% initial state e-/e+ polarization and contain thousands of events - are mixed together at SLAC to produce smaller stdhep files with 500 events each and 80% /20% e-/e+ polarization. These smaller files serve as input to the SiD full simulation and reconstruction software which can be run either on the SLAC linux batch farm or on the grid.
- 2-4-6-8 fermion SM Background: a little bit of everything is being fully simulated – just as was done for the LOI; more fully simulated background events can be produced at the request of the benchmarking group
- low pT, high cross section $\gamma\gamma \rightarrow$hadrons will be overlaid on all fully simulated events
- SiD will use the LOI MC event generation stdhep files for the ttbar signal and background when it reanalyzes this benchmark with the DBD detector.

and beyond…

- Techniques developed for SiD @ ILC and CLiC can also be used for Muon Collider studies.
- Some additions to slic and GeomConverter specific to MuC
  - e.g. tapered endcap calorimeters
- Background overlay and timing cut functionality developed and tested at CLiC directly applicable.
- Will support MuC studies leading up to and at the Snowmass 2013 meeting.

Snowmass 2013

- The APS DPF will host a meeting in Snowmass in the late spring of next year.
- The ALCPG sim/reco group will be providing support for physics and detector studies to be conducted leading up to and during the three-week workshop.
- To facilitate studies by new groups and individuals we need to make things as easy as possible to generate or access detector designs and MC events.
  - Can't expect everyone to have Grid credentials or belong to the correct VO.
  - Will provide access to event samples via ftp from SLAC nfs disks.

and further beyond…

- Participated in a software workshop at CERN to identify issues of common concern to the LC community.
- General consensus to work towards a common simulation application
- Work closely with other efforts (e.g. AIDA WP2)
- Activity to begin in earnest after DBD production.

https://indico.cern.ch/conferenceDisplay.py?confId=171897

Other users

- HPS experiment at Jlab has adopted the lcsim software for its simulation and reconstruction.
- Installation currently ongoing. Data-taking for test run will take place over next three weeks.

Simulating the HPS ECal

- Crystal array geometry and readout is supported in the compact format.
- Silicon tracker modules individually definable and positionable.

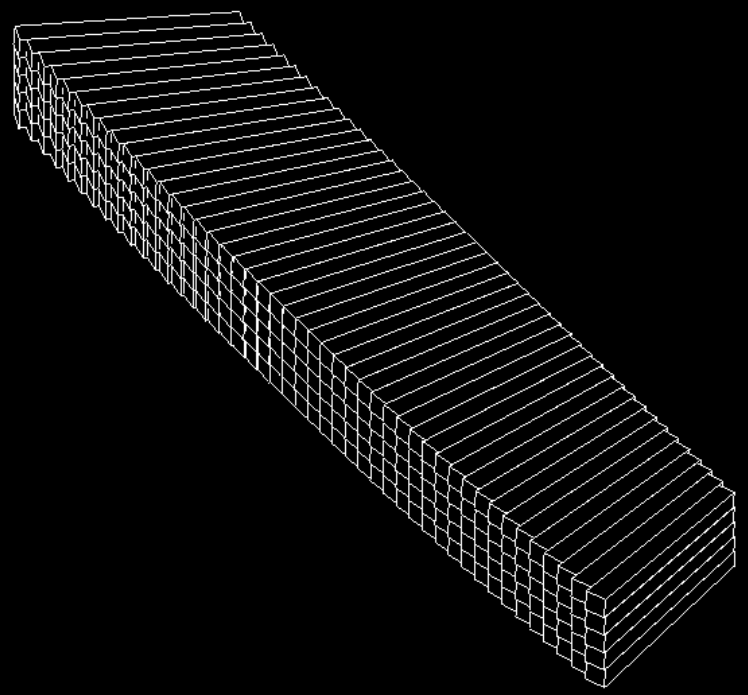

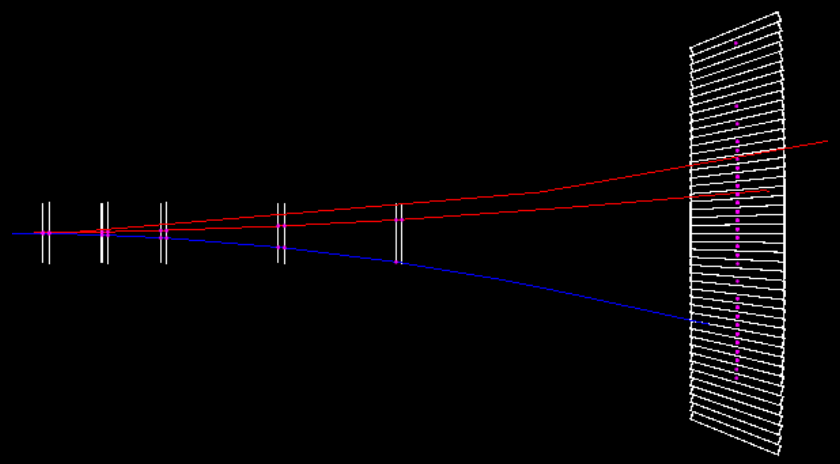

Wired Event Display

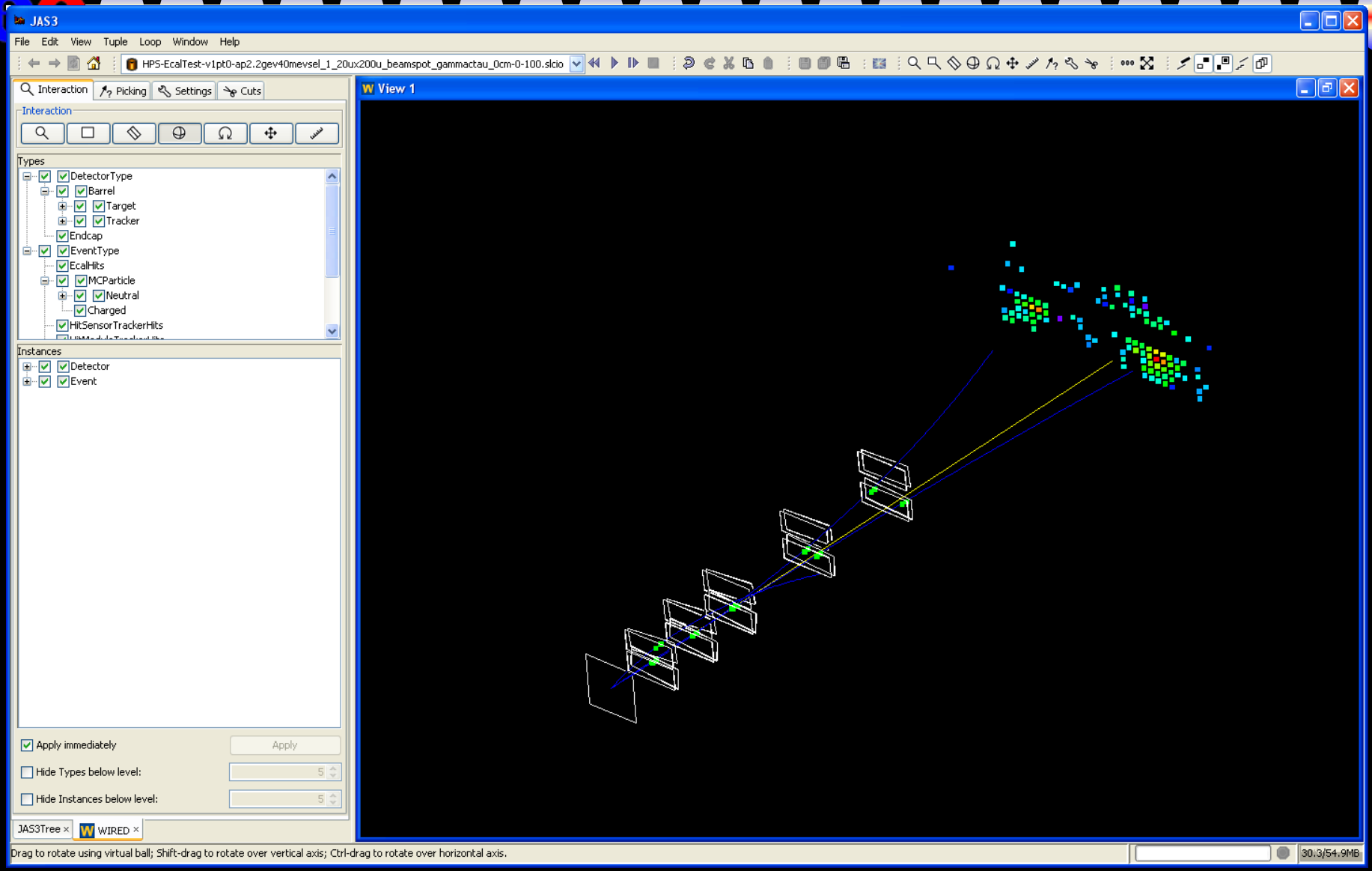

Optical Ray Tracing in Crystals

Configurable shape, material, and optical properties of crystals.

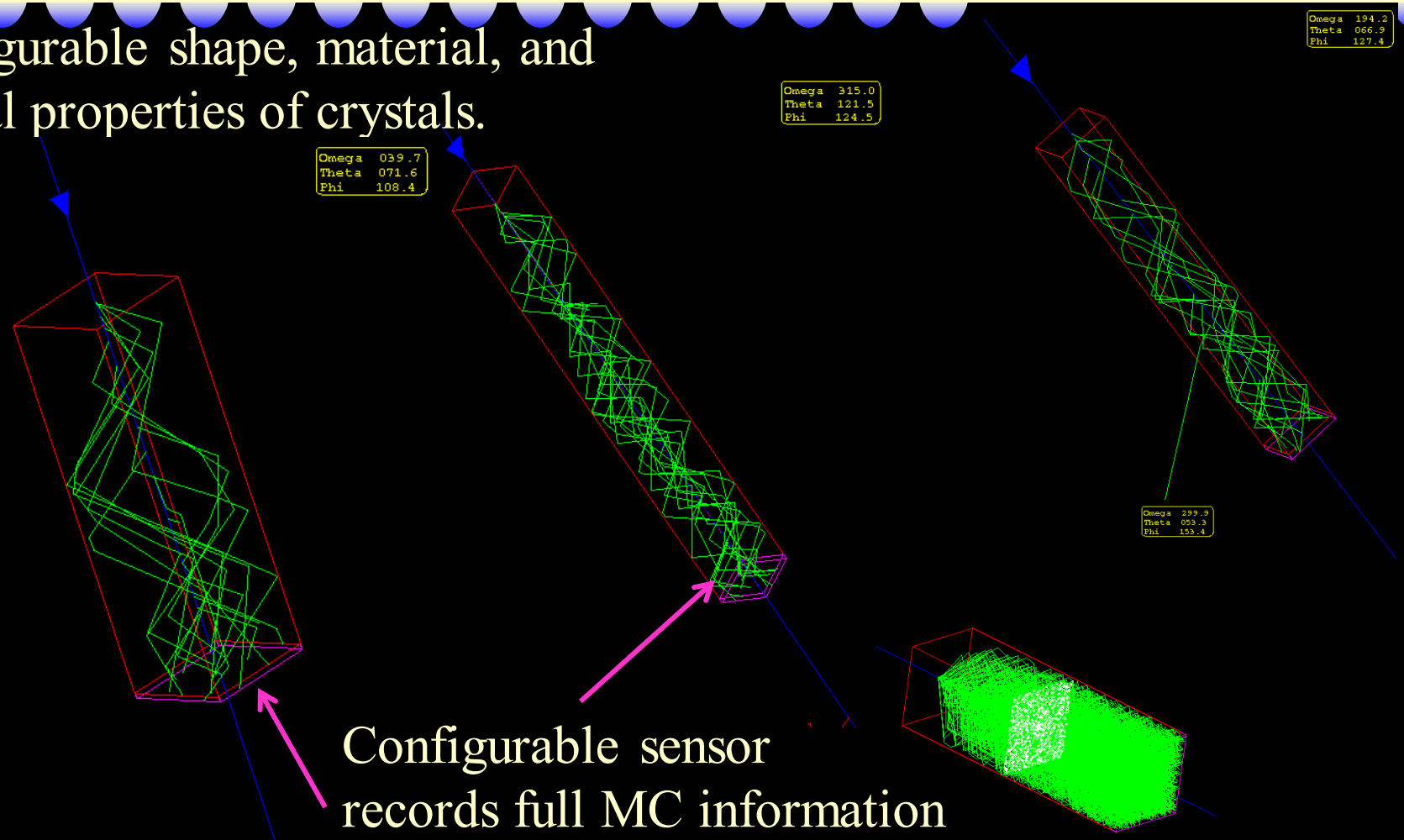

Configurable sensor records full MC information about each incident photon

Courtesy Hans Wenzel

HPS Dipole and Vacuum Vessel

CAD to GDML. Can be used for non-sensitive elements

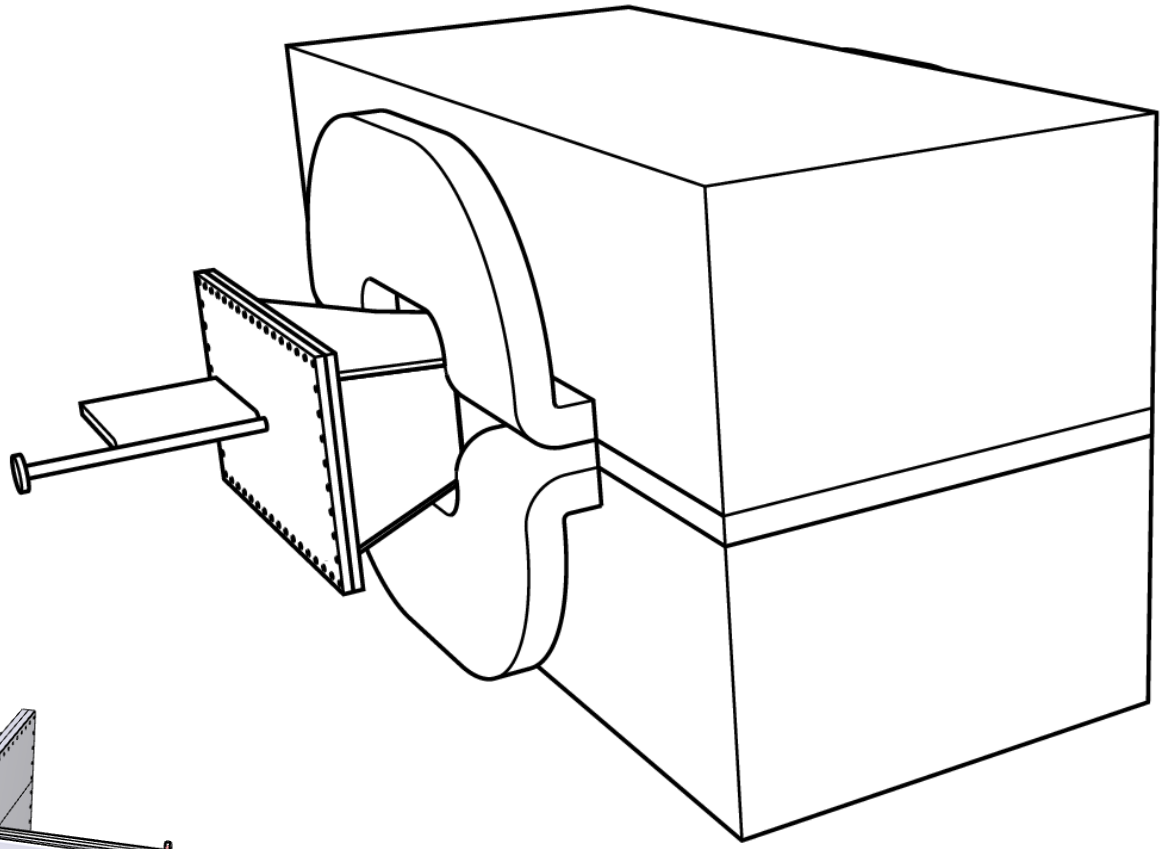

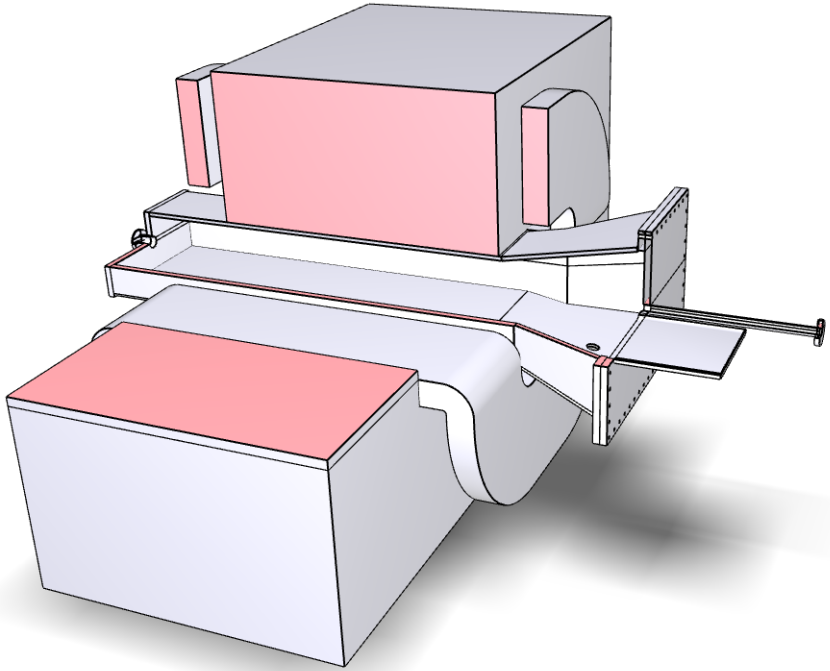

CAD-imported elements.

- Current workflow only supports tesselated volumes.
- Wireframe showing tesselation

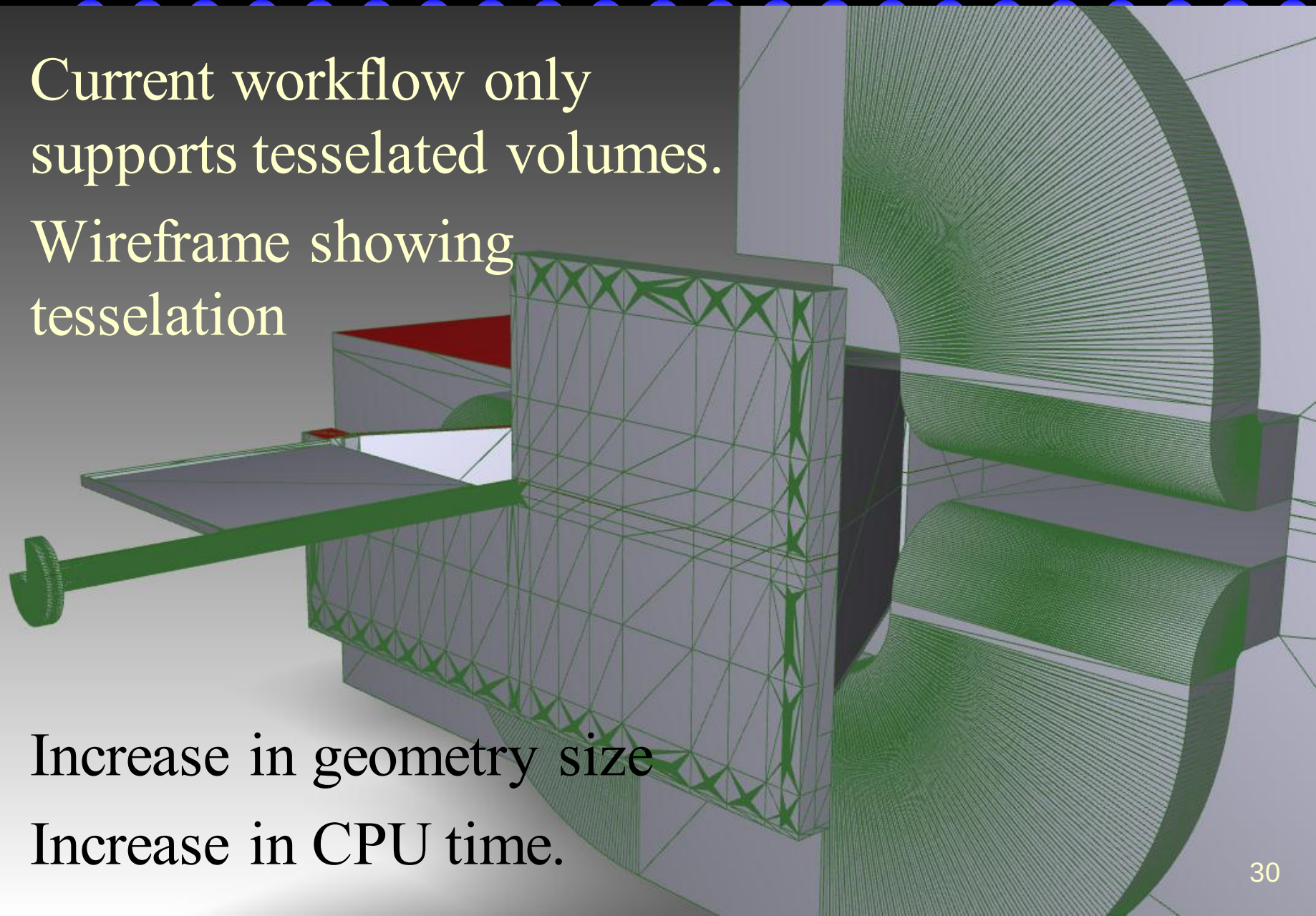

- Increase in geometry size
- Increase in CPU time.

Summary

- Large amount of work still to be done to complete the DBD physics benchmark analyses.
- Benefitted enormously from the CLiC CDR effort
  - Reconstruction of high energy and high background
  - Automation of Grid submission of jobs
- With event generation ~done, time to begin production.
- Had hoped to run full chain in one go, but will probably start detector response simulation now, giving reconstruction some additional time to improve.