Status of Re-entrant BPM R&D for ILC Main Linac

H. Hayano
KEK, Tsukuba, Ibaraki, Japan
A. Heo, J.-Y. RYU, Y.-I. KIM, E.-S. KIM
Department of Physics Kyungpook National University, Daegu, Korea
S.-Y. RYU, J.-K. Ahn
Department of Physics Pusan National University, Pusan, Korea

Requirements for Main Linac Cold-BPM in Cryomodule

(1) **The BPM measures beam position in cryomodule, bunch by bunch, with a resolution of less than 1 μm at $2x10^{10}$ electrons/bunch.**

-> low Q value for fast signal damping at 2K circumference
-> good signal-to-noise ratio for high resolution
-> high precision on mechanical center definition and electrical center definition
-> high common-mode rejection, high isolation for x-to-y coupling

(2) **The beam pipe diameter 78mm (big diameter).**

-> lead to low frequency resonant-mode BPM
-> no coupling to cavity HOM and no conflict with dark-current excited cavity HOM

(3) **BPM is installed inside of cryomodule, next to SC-cavity.**

-> simple structure with no contamination inside (clean-room compatible)
-> HPR rinse applicable
-> light weight for easy to handle/to install in clean-room

Design Base : Saclay re-entrant BPM

adding waveguide loading for CM-rejection and X-Y coupling rejection

Proto-type BPM

Proto-type model

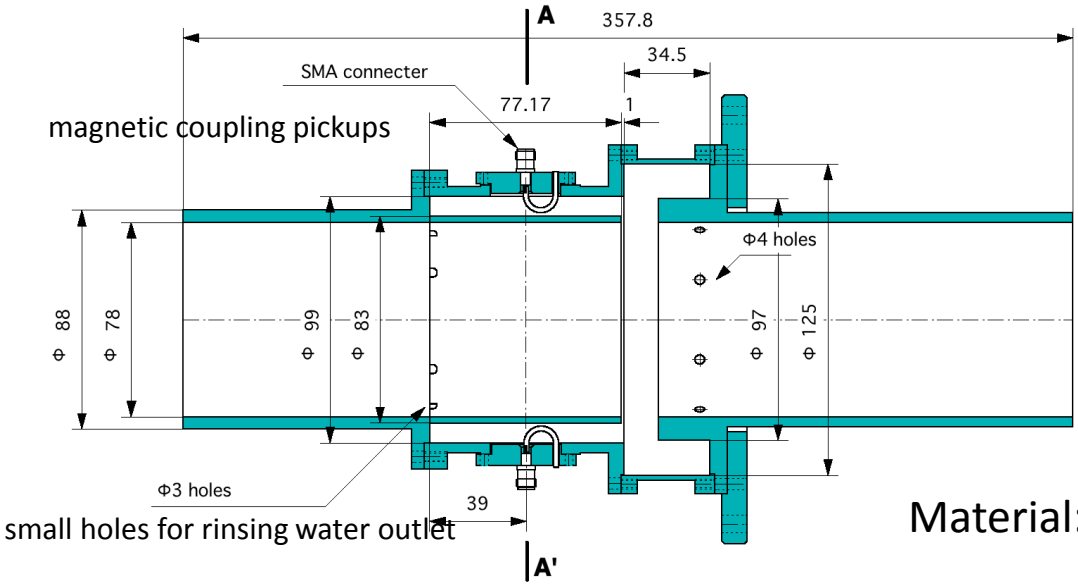

Material: SUS

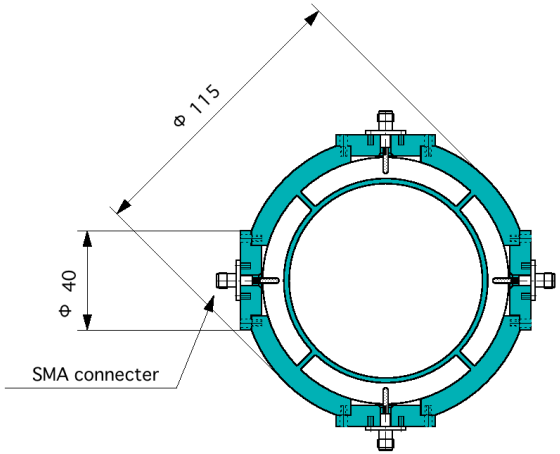

A - A' cross section

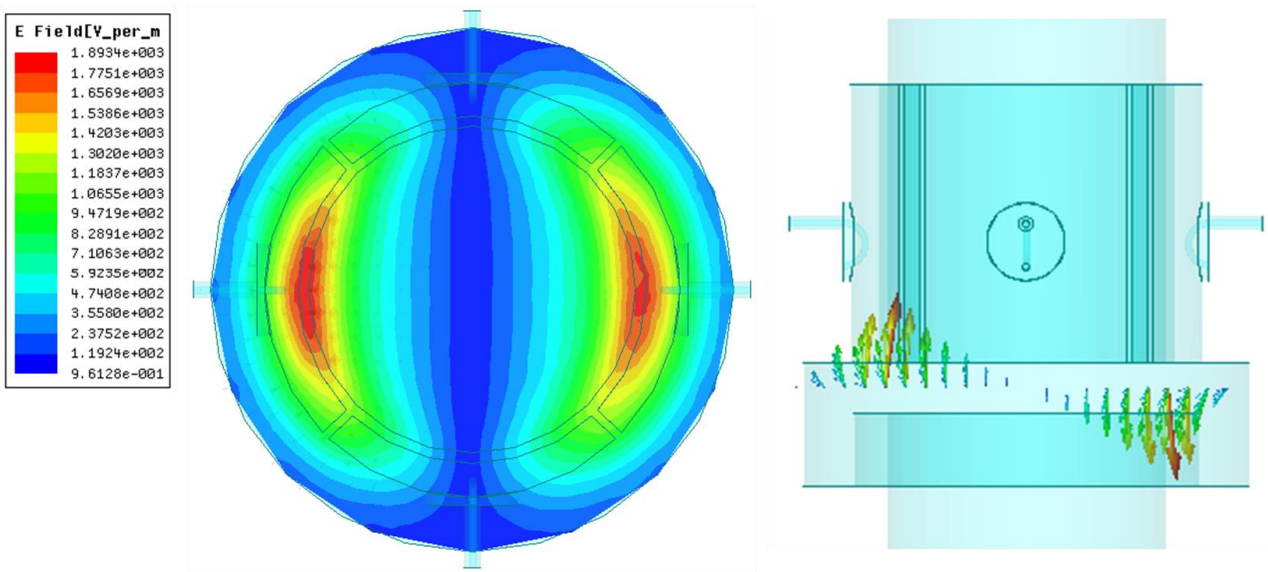

dipole mode: 2.04GHz (No interference with Cavity HOM)

RF characteristics of prototype model

Isolation measurement

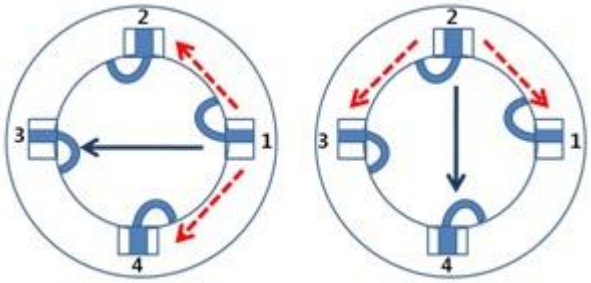

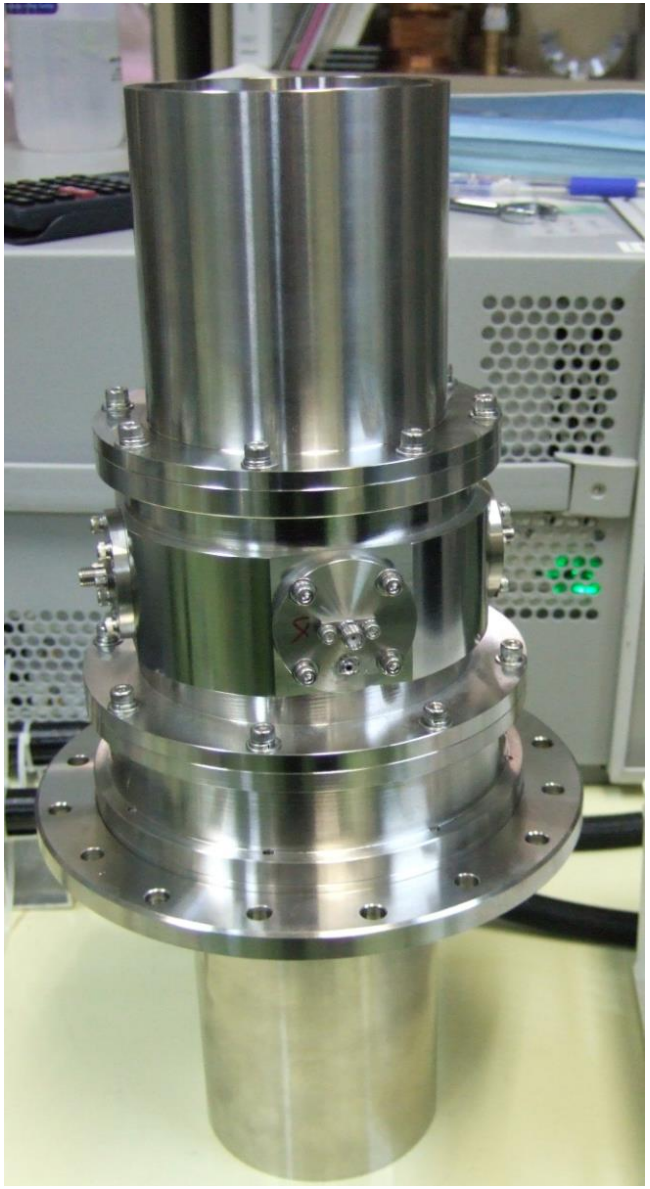

Input port	Output port	f[GHz]	Δf [MHz]	QL	Q0	β	τ[sec]
1	3	2.049	9.90	205	335	0.635	6.69E-8
2	4	2.049	7.81	262	475	0.808	8.57E-8

Low QL

Port	Slot	Isolation [dB]	Transmission [dB]
1	2	-27.18	
	3		-8.54
	4	-27.34	
2	1	-27.19	
	4		-7.03
	3	-29.49	

High isolation <-27dB

Antenna scan method for prototype model

The transmission from antenna excitation to signal pick up is scanned by changing antenna position.

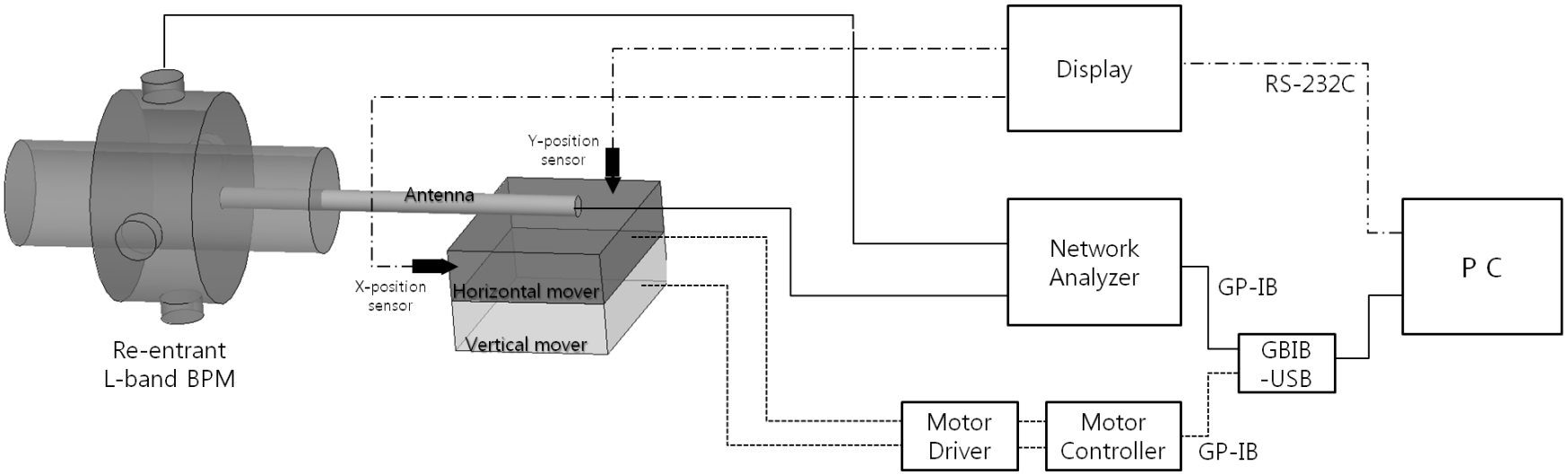

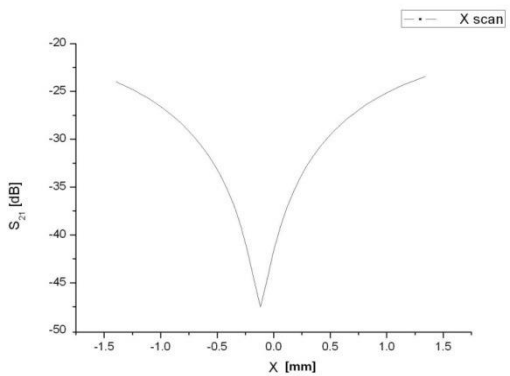

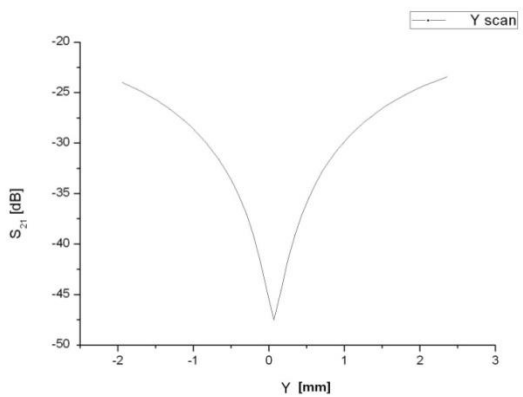

The sharp V-shape is expected for good CM-rejected BPM.
The minimum point would be ‘electrical center’.

Electrical center to mechanical center Deviation measurement

A	Z mover stage
B	XY mover stage
C	Rotational stage
D	Cavity
E	Goniometer Stage
F	Antenna
G1, G2	edge measuring device
H	Flange Adapter

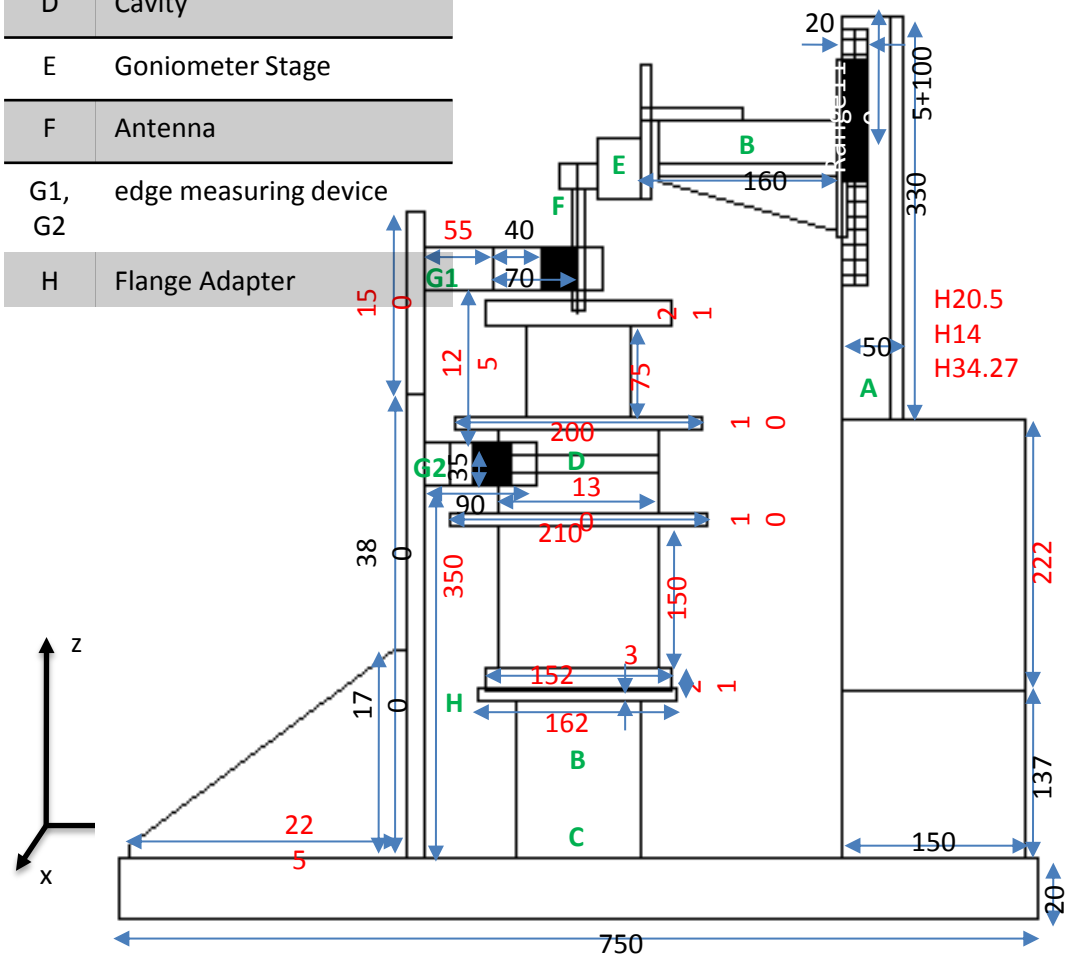

Antenna: X movement only
-> Antenna scan

Cavity-BPM: on rotational stage
with X-Y stage
-> BPM can be rotate 180deg. with keeping its mechanical center
(mechanical center was gotten by to align BPM center to rotation center.)

Y direction

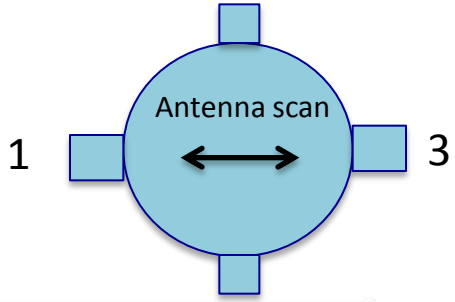

180degree BPM rotation

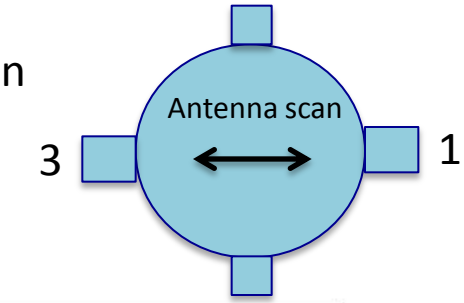

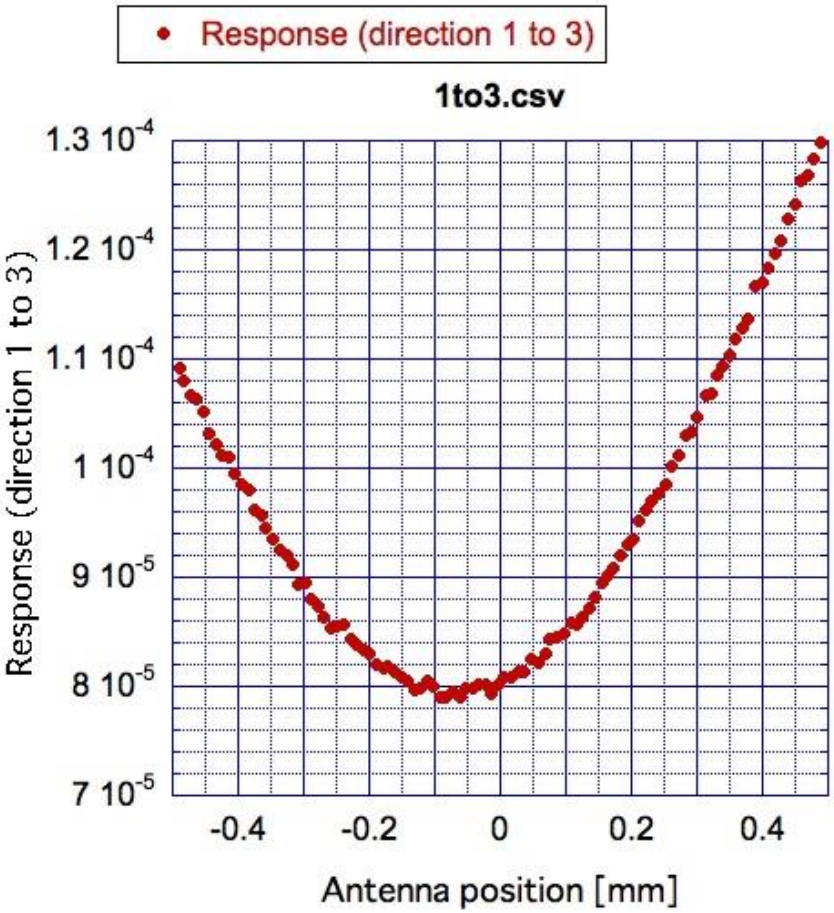

Center = -0.08mm

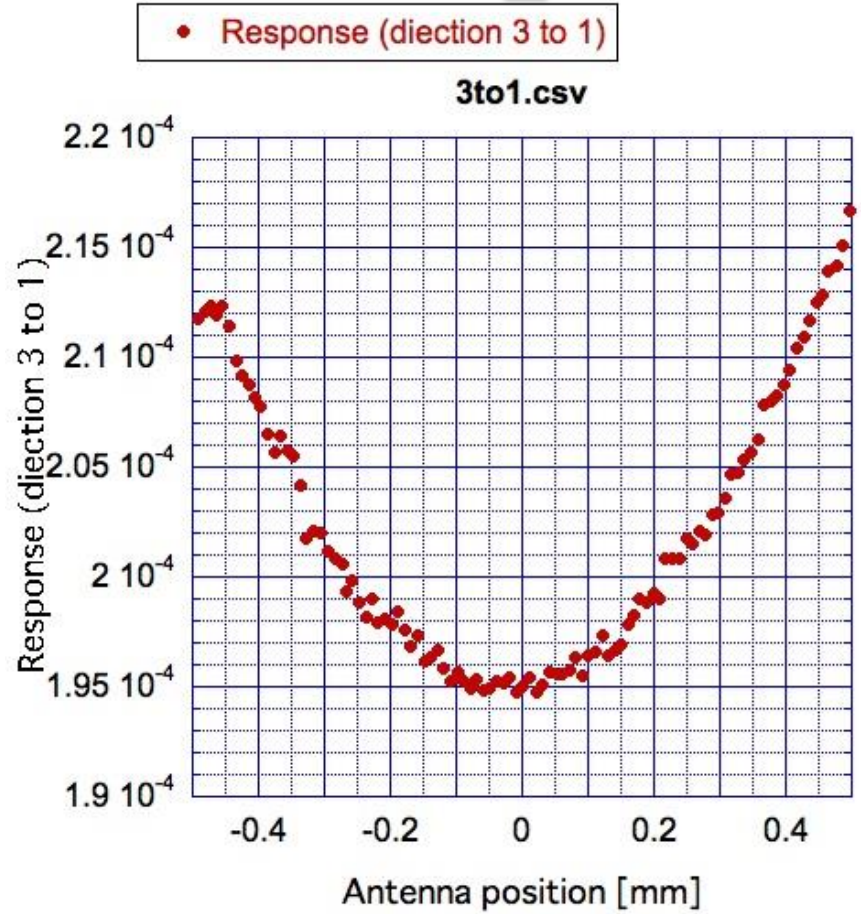

Center = -0.02mm

Electrical center will be ((-0.08)+(-0.02))/2 = -0.05

The response is not sharp-V -> still common-mode mix?

X direction

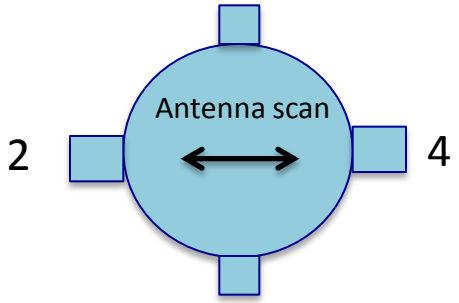

180degree BPM rotation

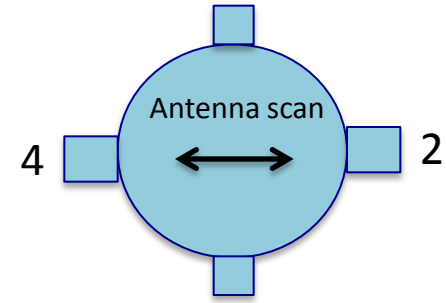

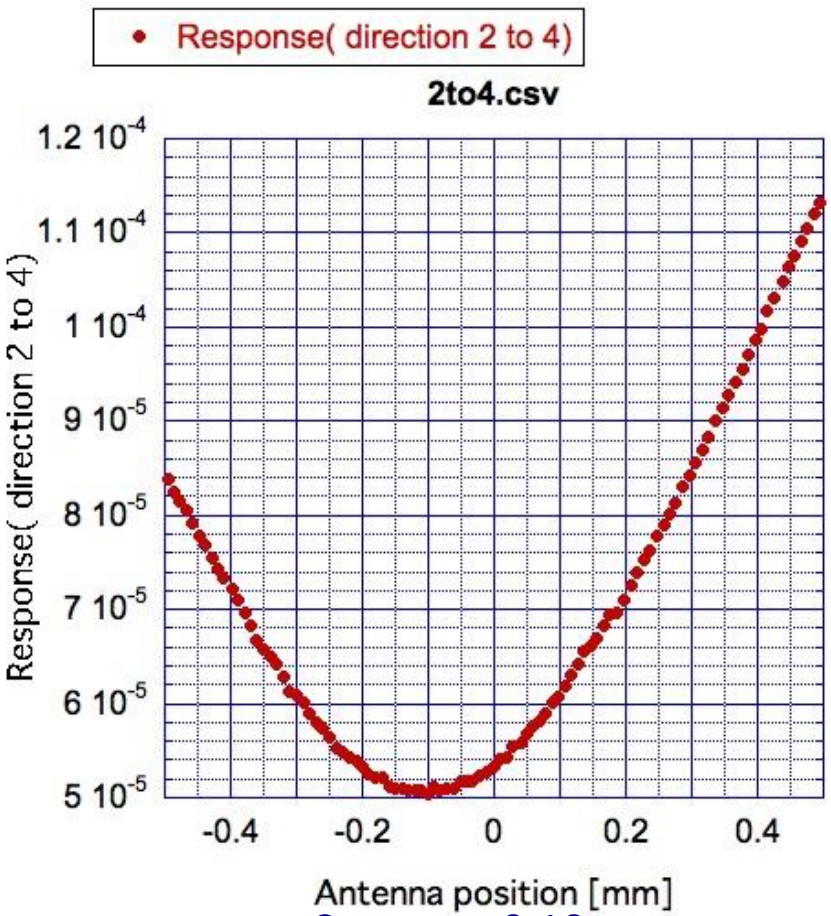

Center = -0.10mm

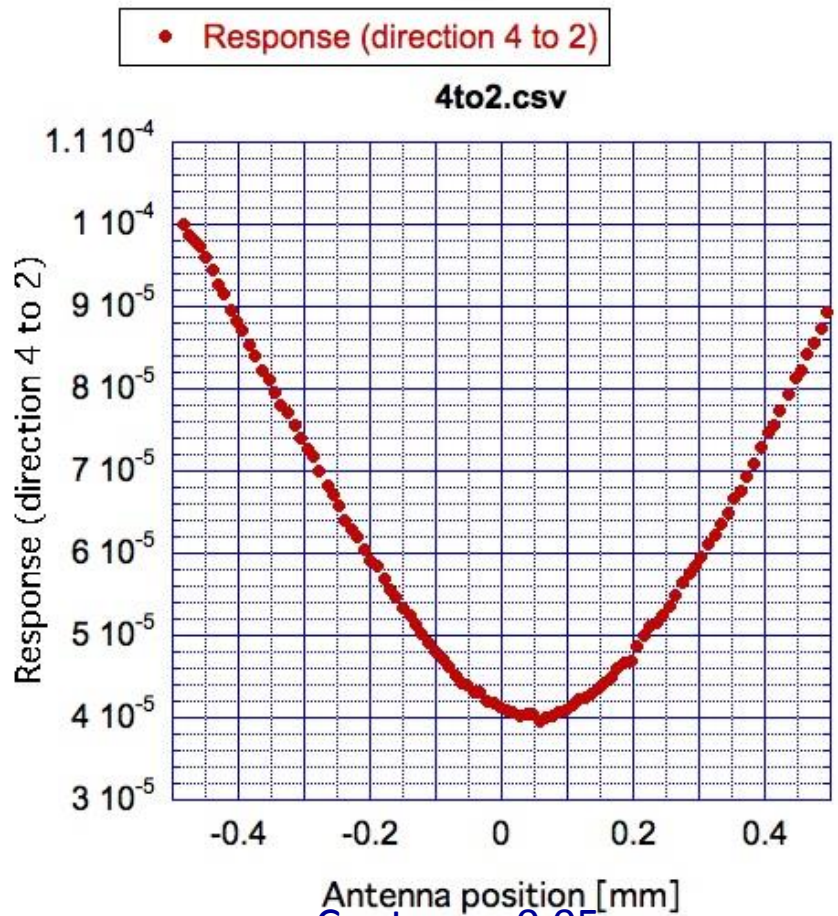

Center = +0.05mm

Electrical center will be ((-0.10)+(+0.05))/2 = -0.025

The response is not sharp-V -> still common-mode mix?

Beam response test of prototype model at ATF-LINAC (1) using simple circuit (diode, amp, integration ADC)

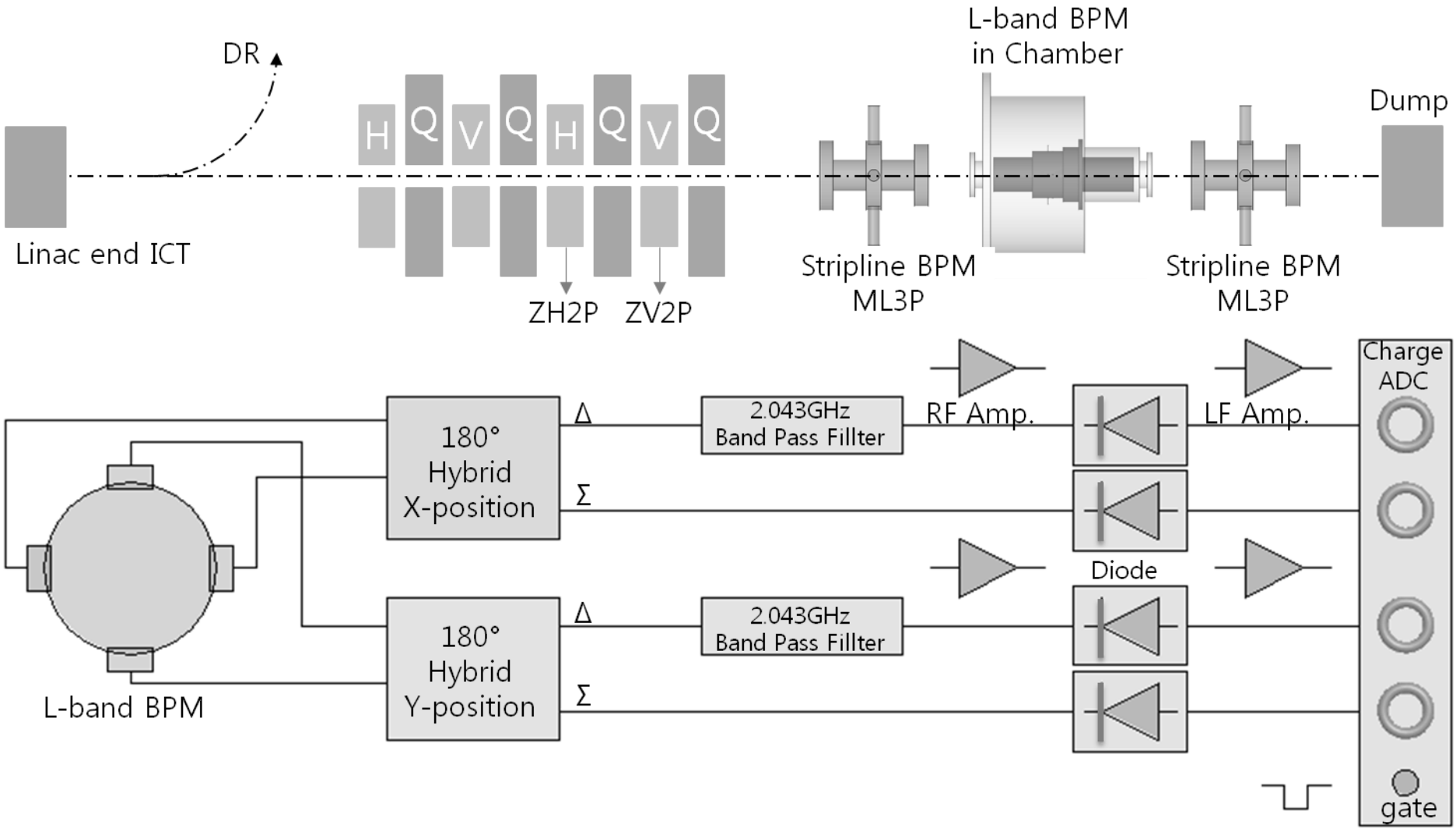

Proto-type BPM was housed by big vacuum chamber

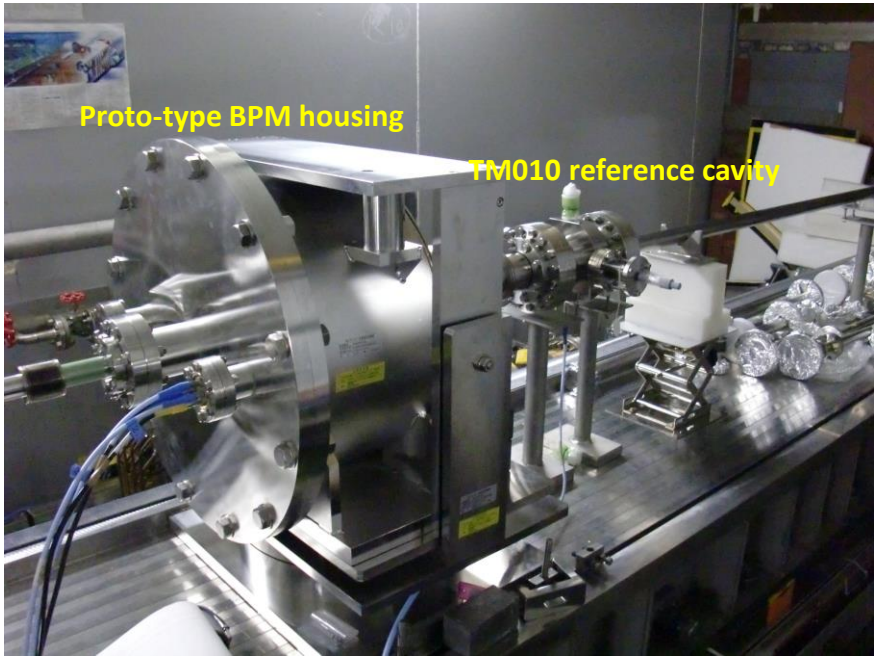

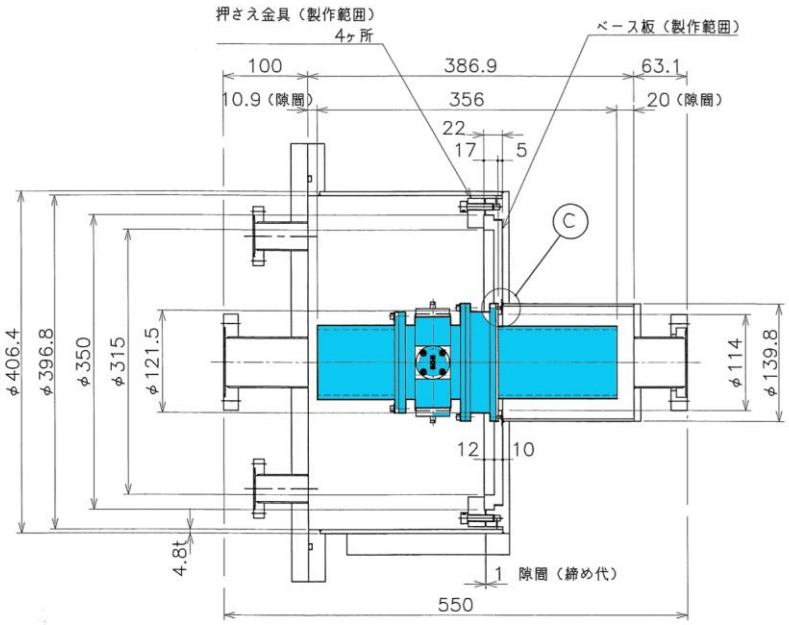

Proto-type BPM housing

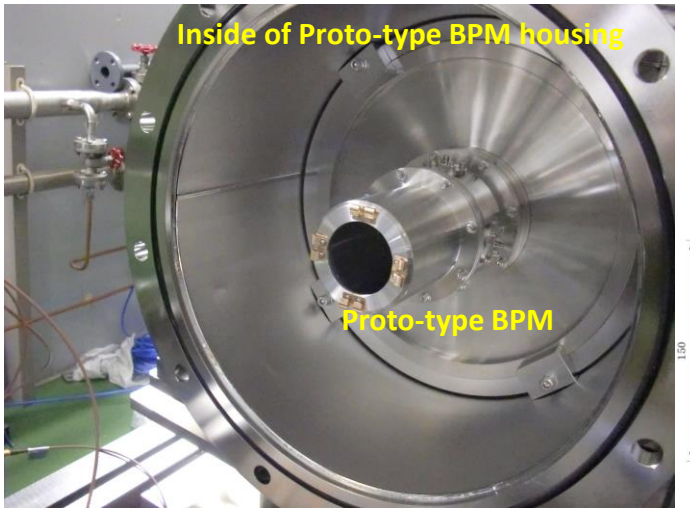

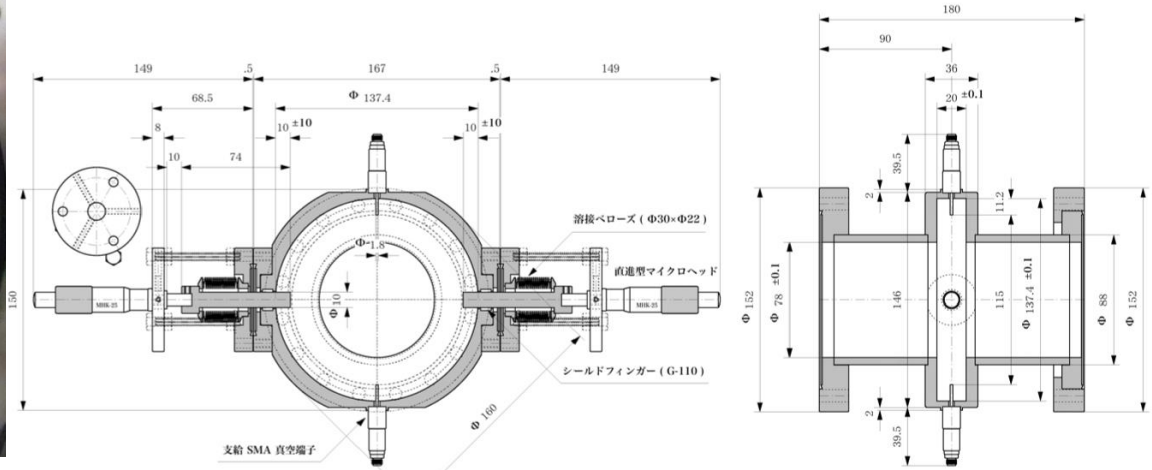

TM010 reference cavity was used for phase measurement

Beam response

Raw signal

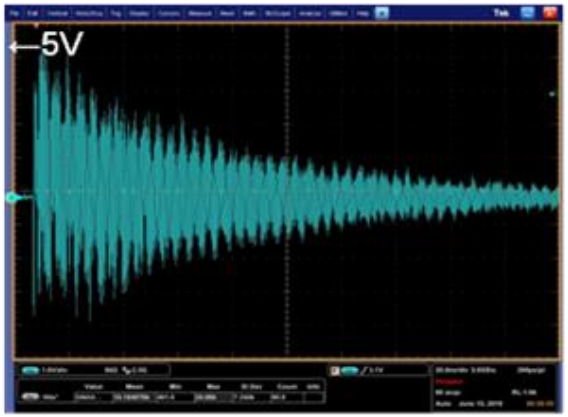

After 2.04GHz BPF

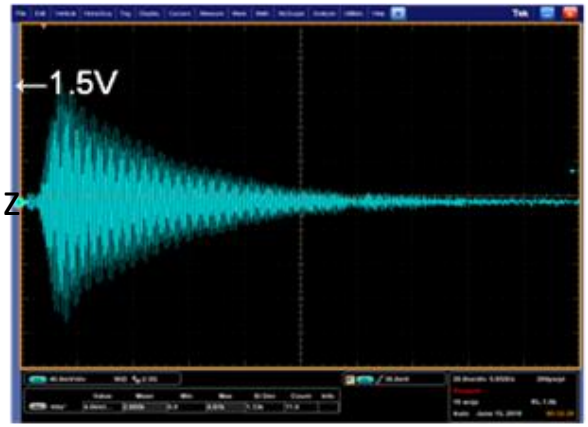

FFT of Raw signal

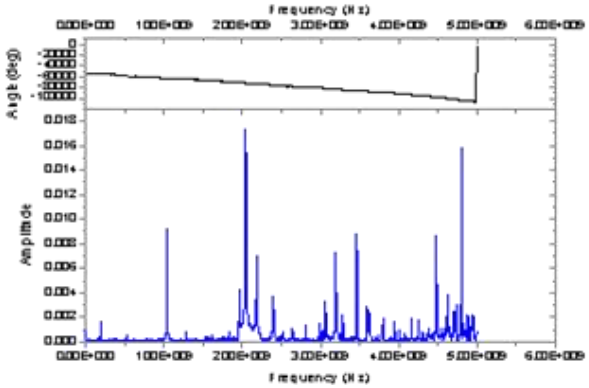

FFT of 2.04GHz BPF output

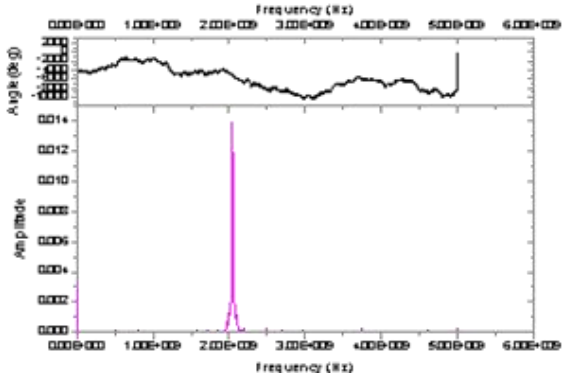

ATF LINAC beam

- **1.3GeV**
- **single bunch**
- **1 x 10^{10} electron/bunch**
- **1.5Hz repetition**

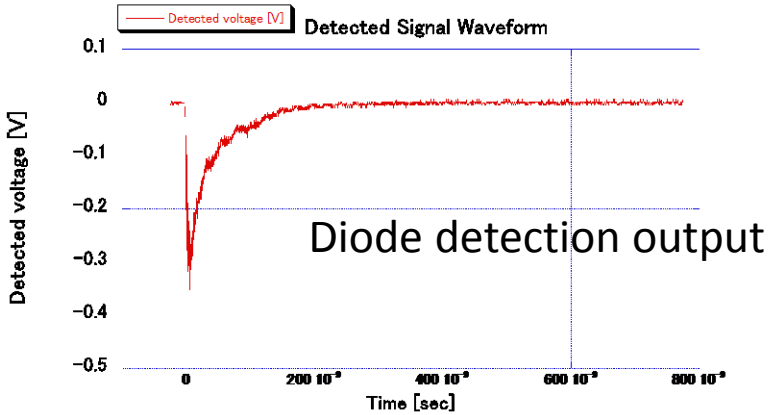

Resolution estimation by (pedestal noise)/(signal response slope)

setup (A)

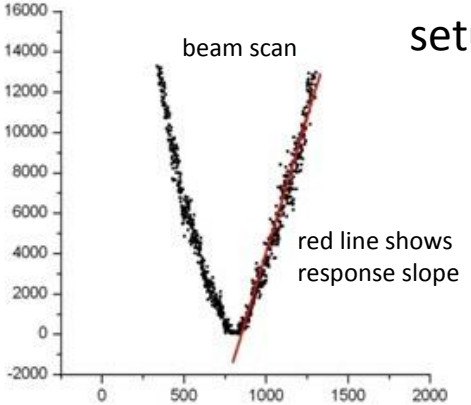

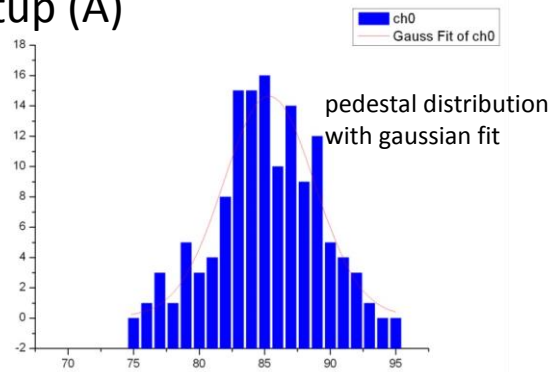

setup (C)

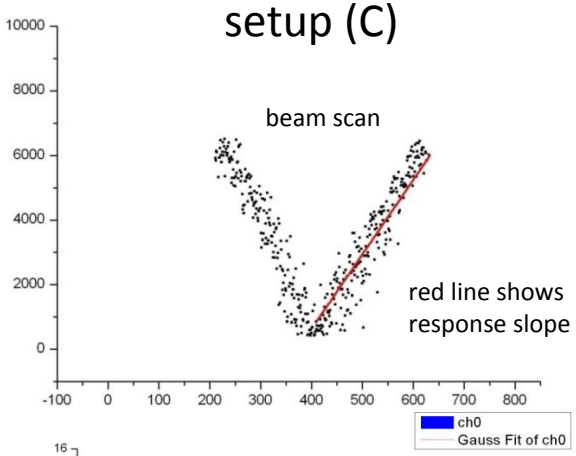

setup (B)

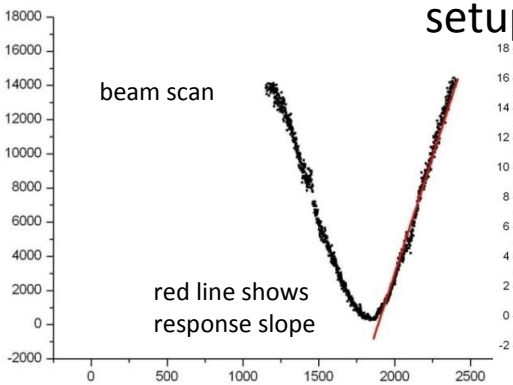

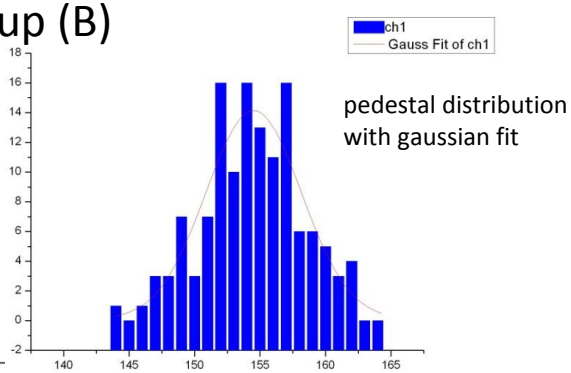

electronics setup	axis	pedestal noise [count]	response slope [counts/μm]	estimated resolution [μm]
(A) Hybrid+BPF+diode+LF-amp	X	3.47	4.57	0.75
(B) Hybrid+BPF+RF-amp+diode+LF-amp	Y	3.65	8.02	0.45
(C) Hybrid+BPF+RF-amp+diode	X	1.96	5.33	0.36

Beam response test of prototype model at ATF-LINAC (2) using phase detection circuit

(phase between BPM cavity, Reference cavity)

Electronics setup

BEAM TEST on Jan 2011

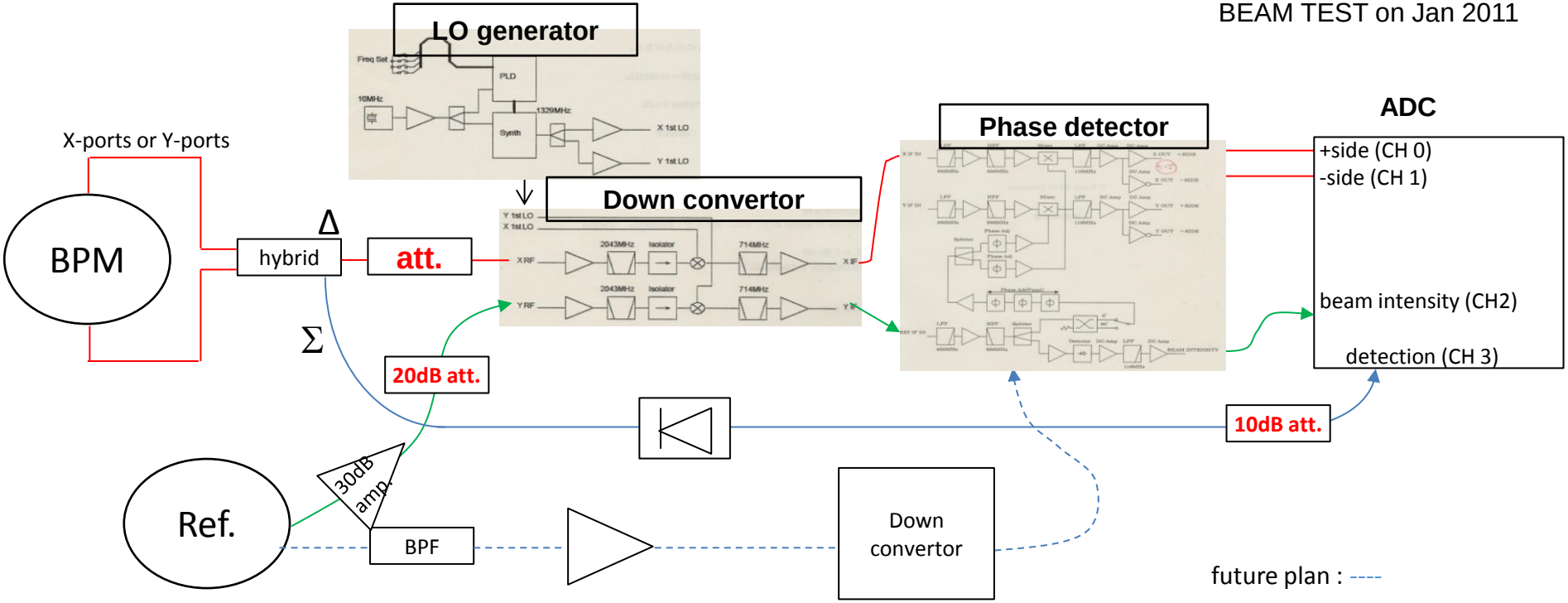

Both signal were down converted to 714MHz, then fed into the phase detector. Analog output of the phase detector were fed into integration ADC (charge ADC).

Waveforms in the phase detector circuit

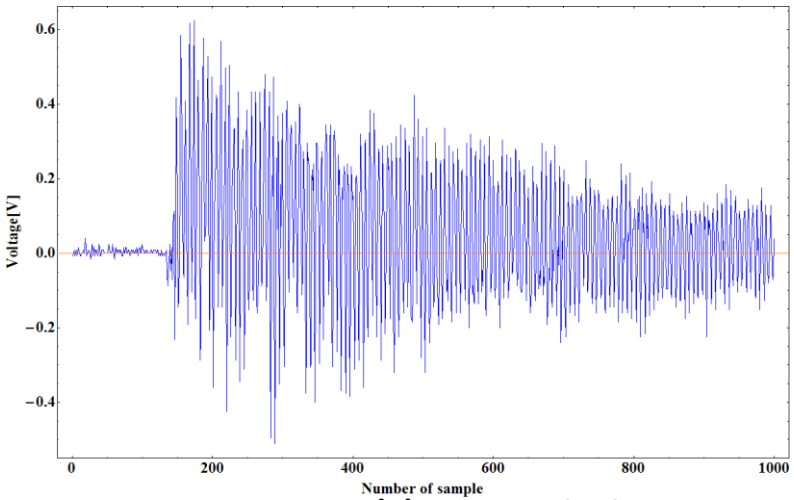

SCOPE (1) rawsignal_Ch1

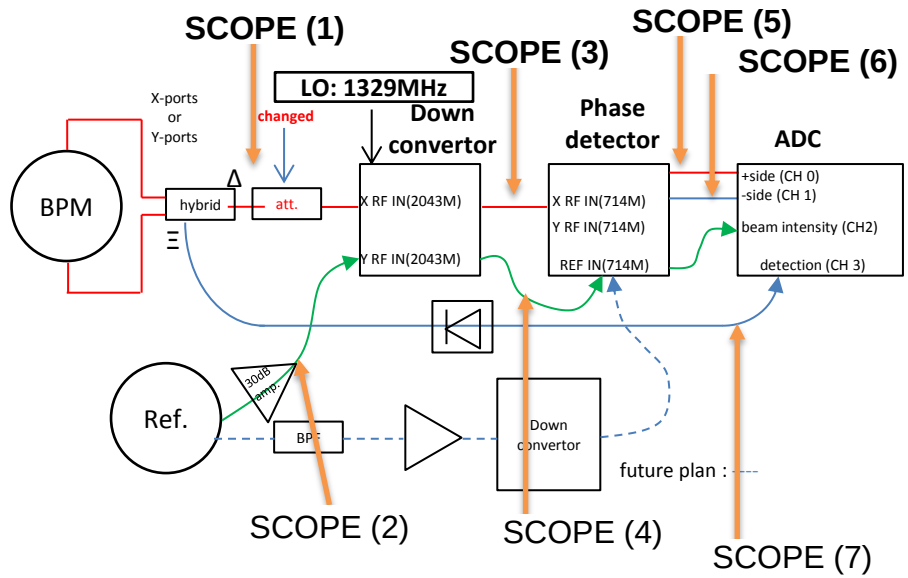

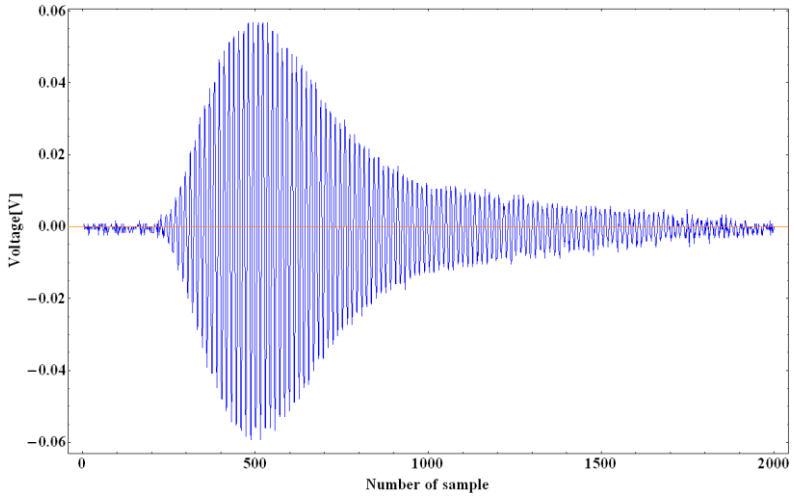

SCOPE (3) downconverteroutput_Ch1

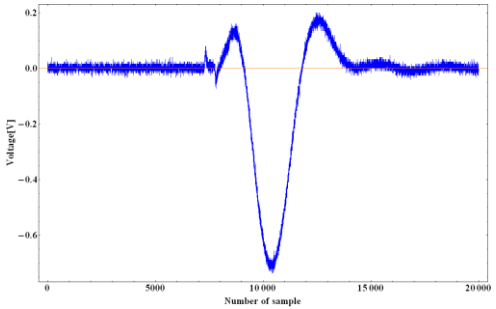

SCOPE (5) phasedetection_2_Ch1

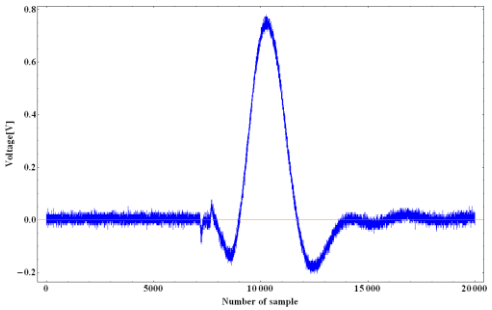

SCOPE (6) phasedetection_2_Ch2

data_24Jan2011

Resolution estimation : phase detector circuit

Y-ports data with 28dB att. _27 Jan 2011

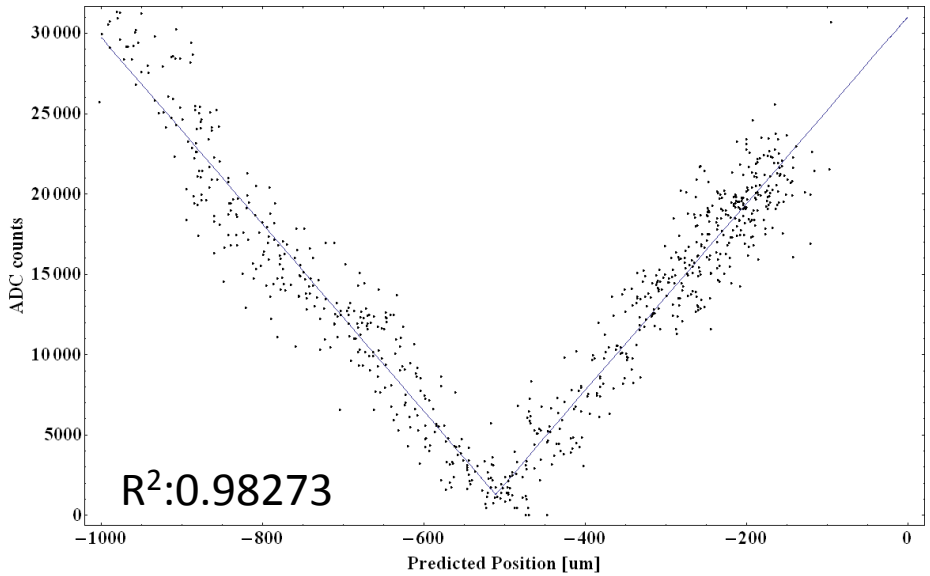

ATF LINAC beam
1.3GeV
single bunch
0.5 x 10^{10} electron/bunch
1.5Hz repetition

Resolution = noise level [counts]/ slope [counts/um]

BPM signal with 28dB att.	**+ side**	**- side**
Noise level [counts]	19.5452	24.3839
Gradient [counts/um]	58.1498	58.1498
Resolution [um]	0.336118	0.419329

Vacuum-tight Model

Vacuum-tight model

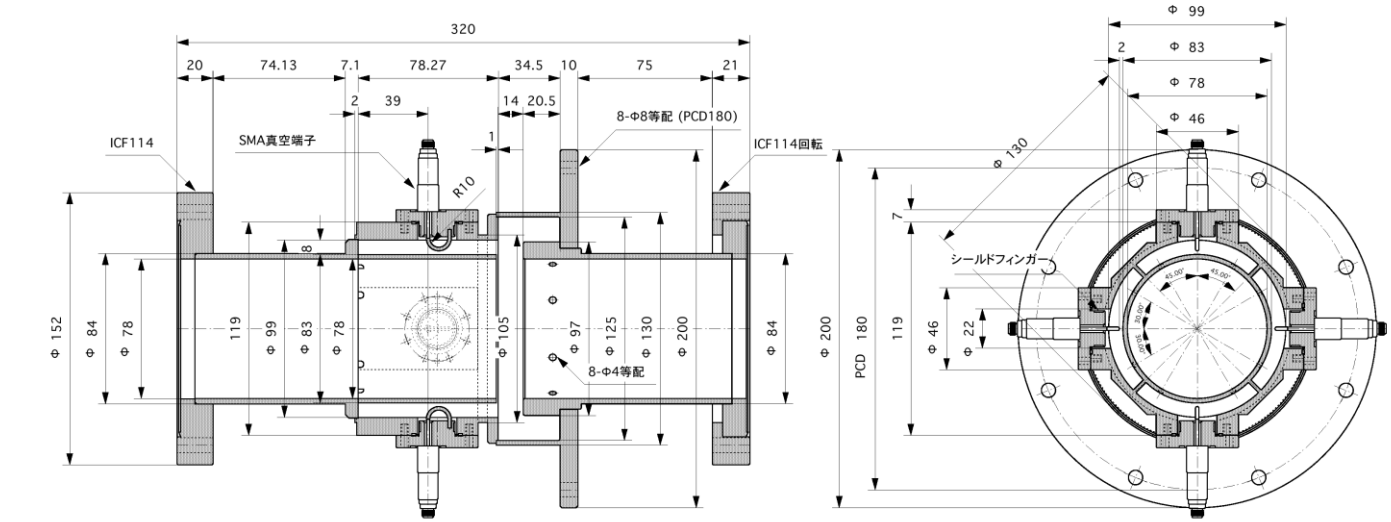

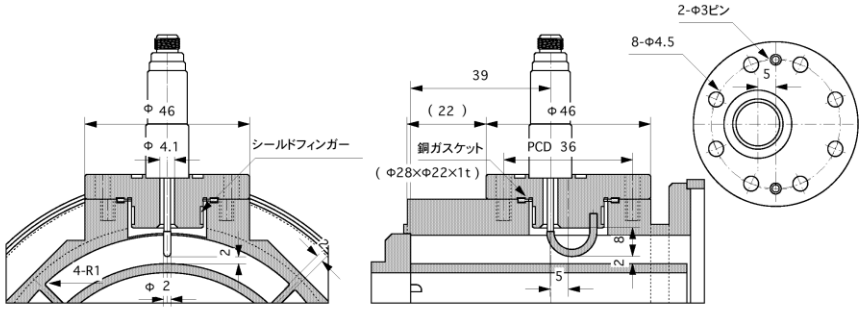

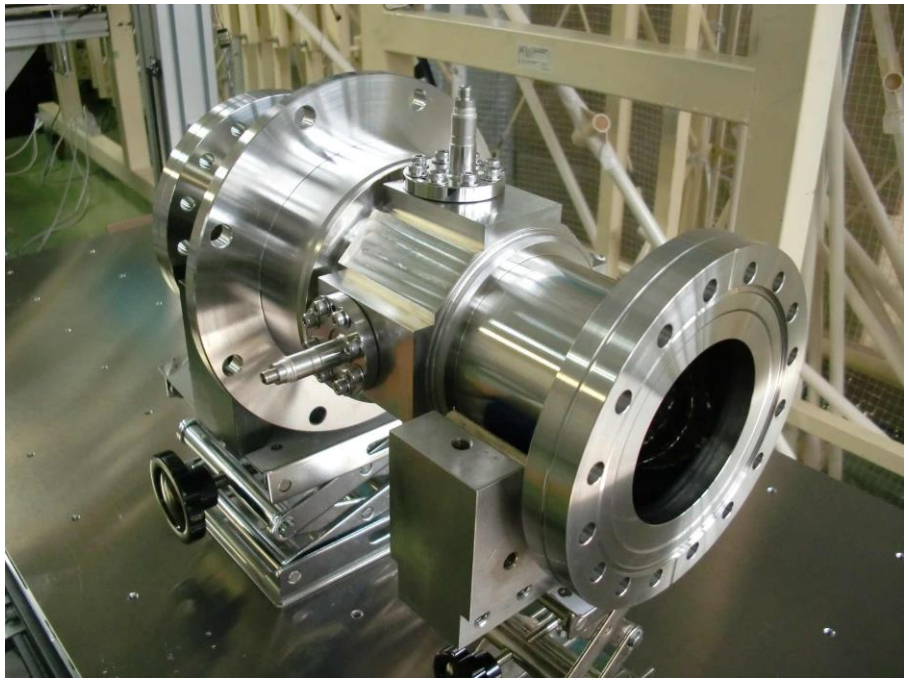

Feed-through + loop-antenna are demountable for final adjustment

Beam Experiment plan for Vacuum-tight model

Two more BPMs are under fabrication in Korea (KNU).

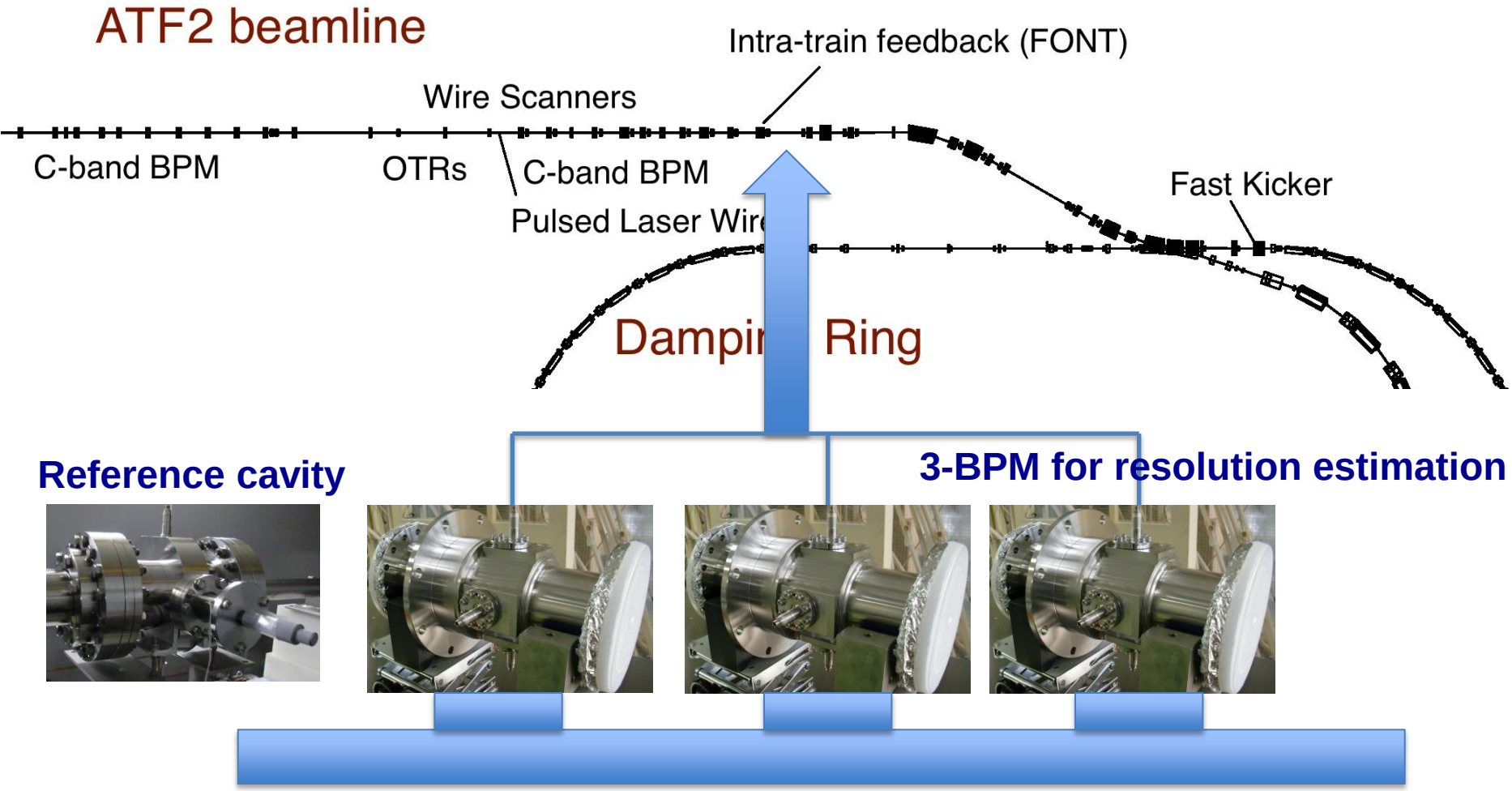

Digital signal acquisition

Down-converter(2043MHz ->93MHz) + ADC(14bits 400Ms/s) + FPGA

CM-1 BPM for Cryomodule installation

BPM installation into Cryomodule, Test of BPM under cooled state

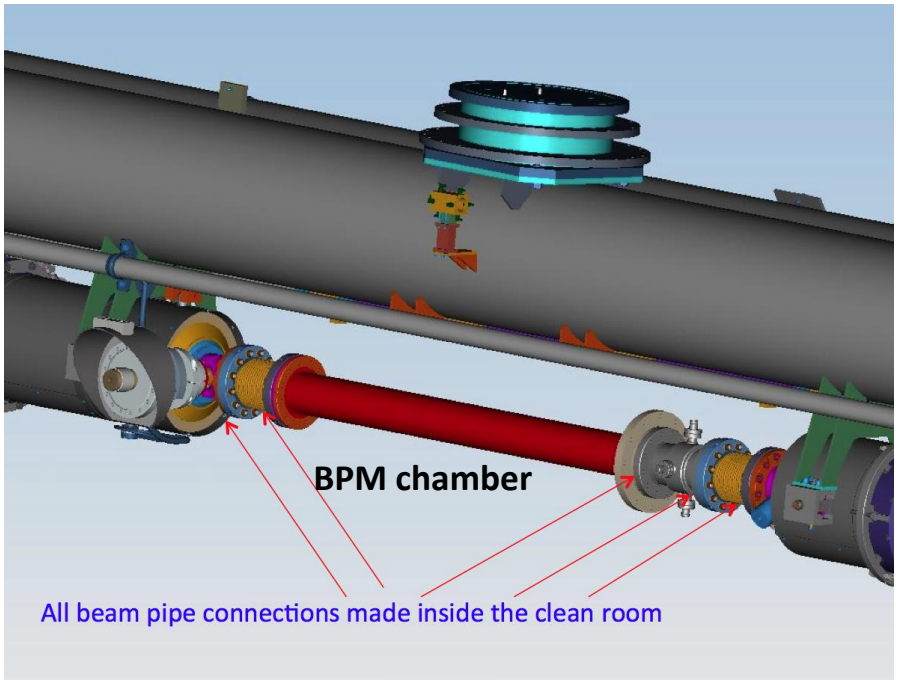

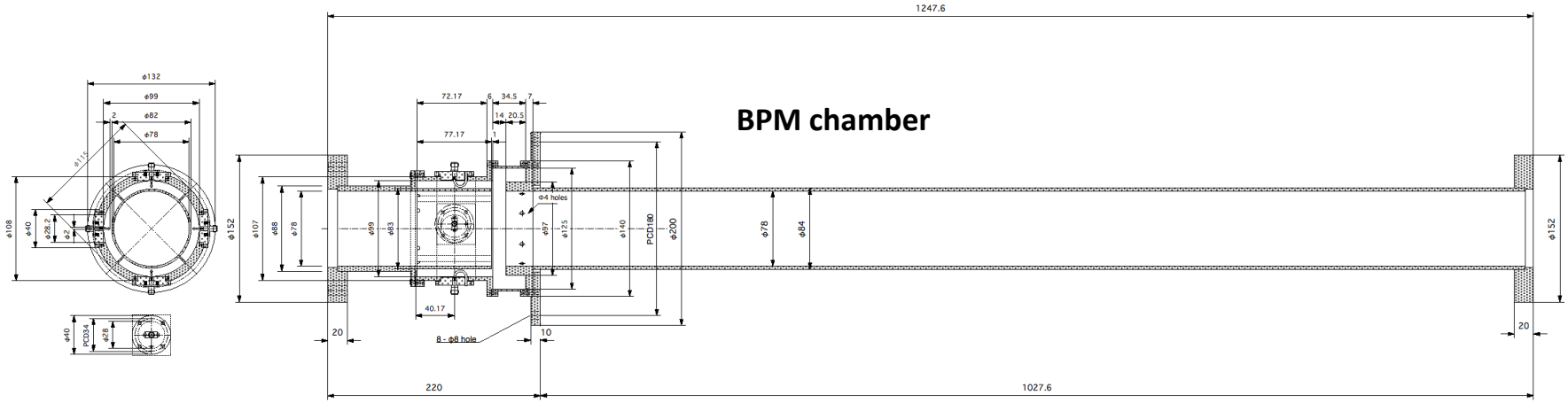

L=900, superconducting quadrupole magnet installation place

KEK CM-1 : ILC type cryomodule

CM-1: 13m　8 cavities ＋ SC Q-magnet ・BPM

First ILC-type Cryomodule in the world (magnet in the center)

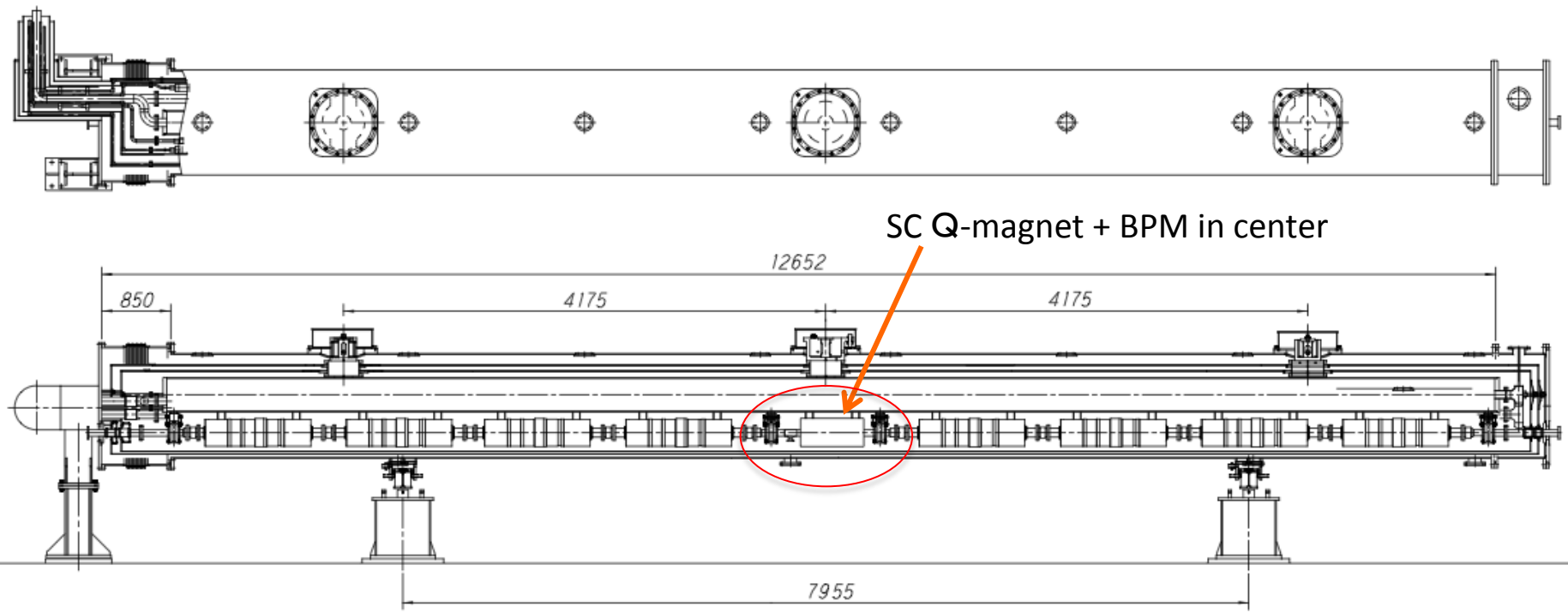

cool-down in Oct. 2014, and beam operation in 2015

BPM issues to be identified in this test : effect on cavity gradient degradation,
alignment preservation,
heat load,
beam position detection

Expanded view of BPM-Quad region

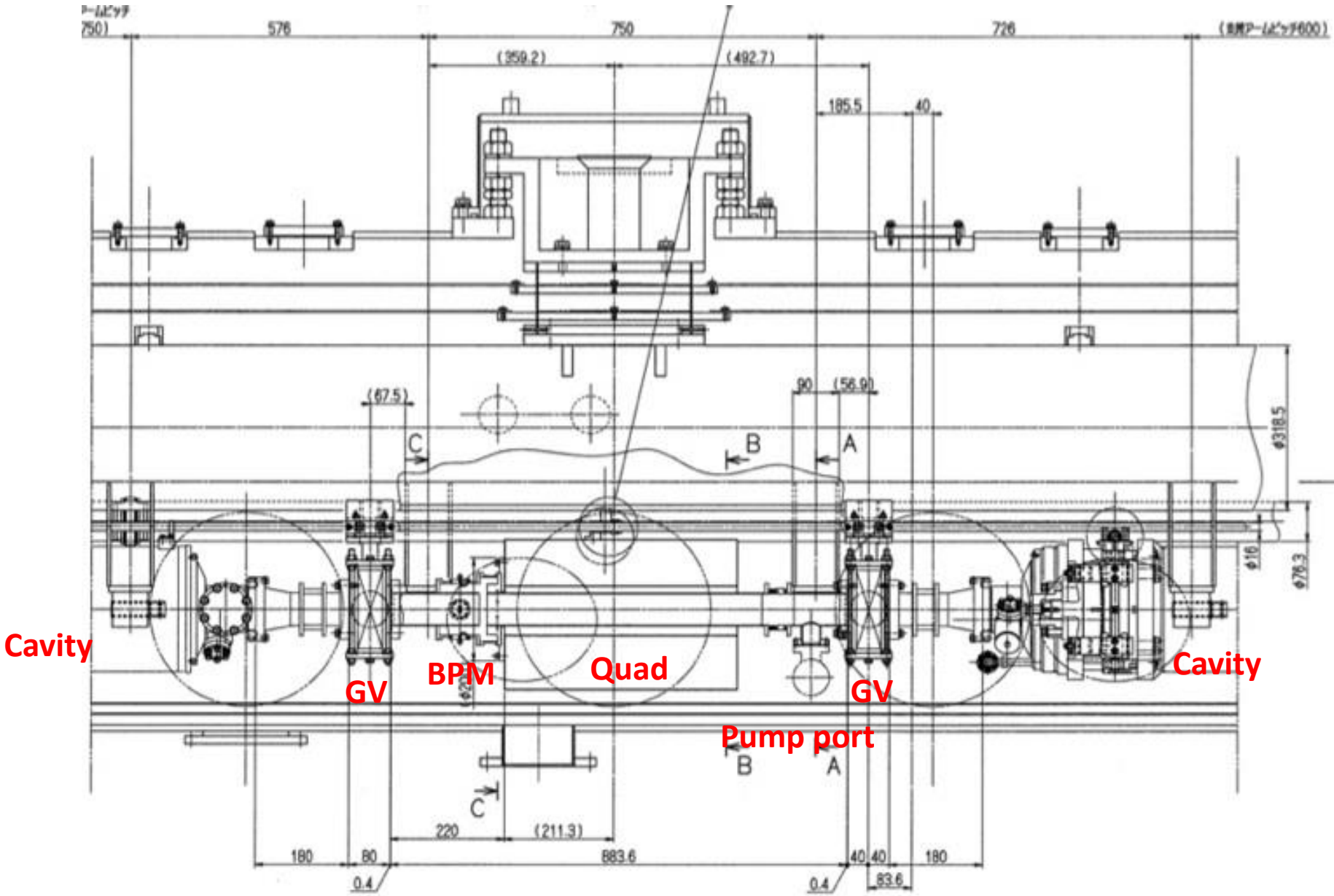

Fabricated CM-1 BPM for Cryomodule installation

Re-entrant BPM drawing for CM-1 installation

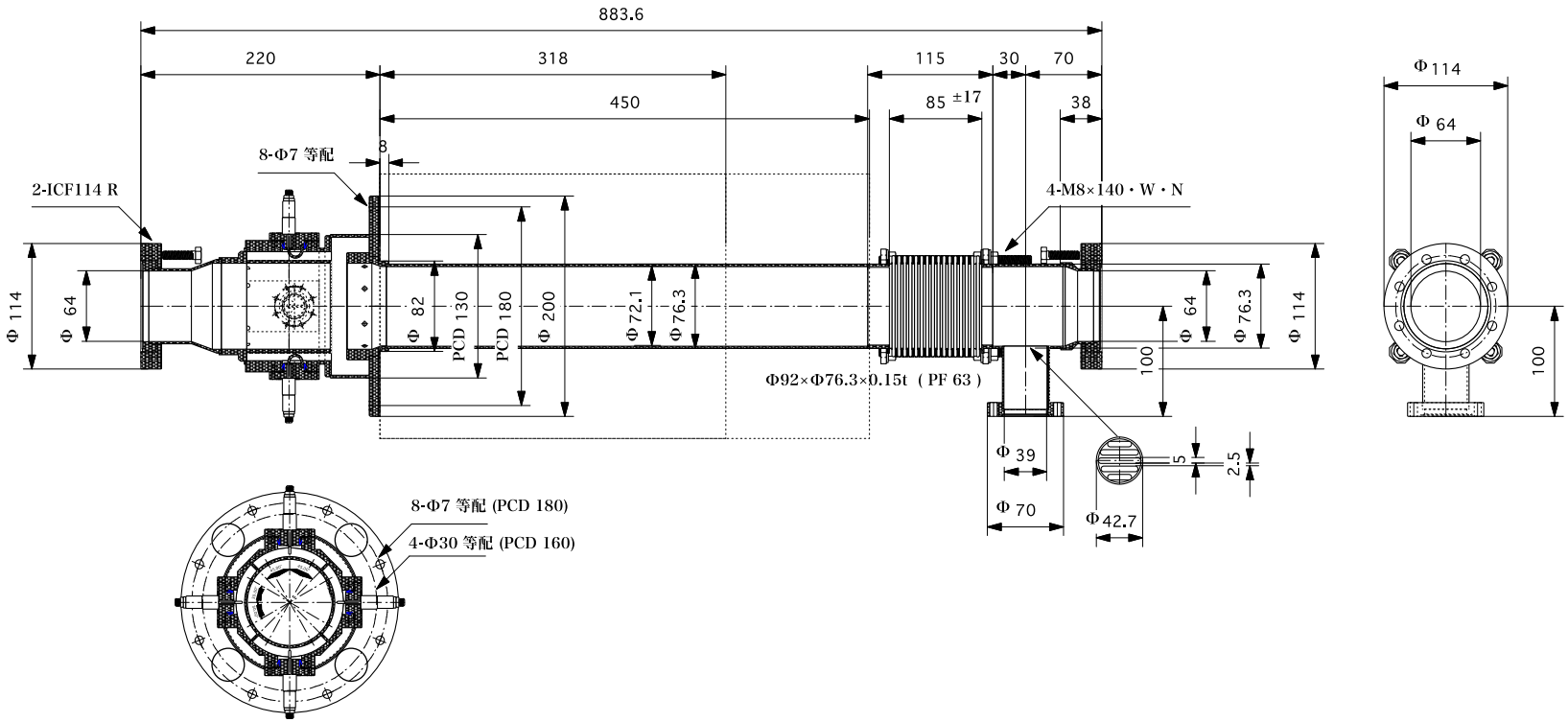

仕 様

接　合　ＴＩＧ溶接

リ-ク 量　　1×10^{-10} Ｐａ・ｍ３/ sec 以下

表 面 処 理　　鏡 面 電 解 研　磨

材 質　　ＳＵＳ３１６Ｌ

個 数　　１　個

三角法	尺度　１／４	作成:　２０１３年６月２８日	
記事	確認	Beam position moniter ＩＬＣ main Linc	
	設計　清野	図番:　３-　６２１６　改符	
	有限会社　清和製作所	工事番号　１７０６	

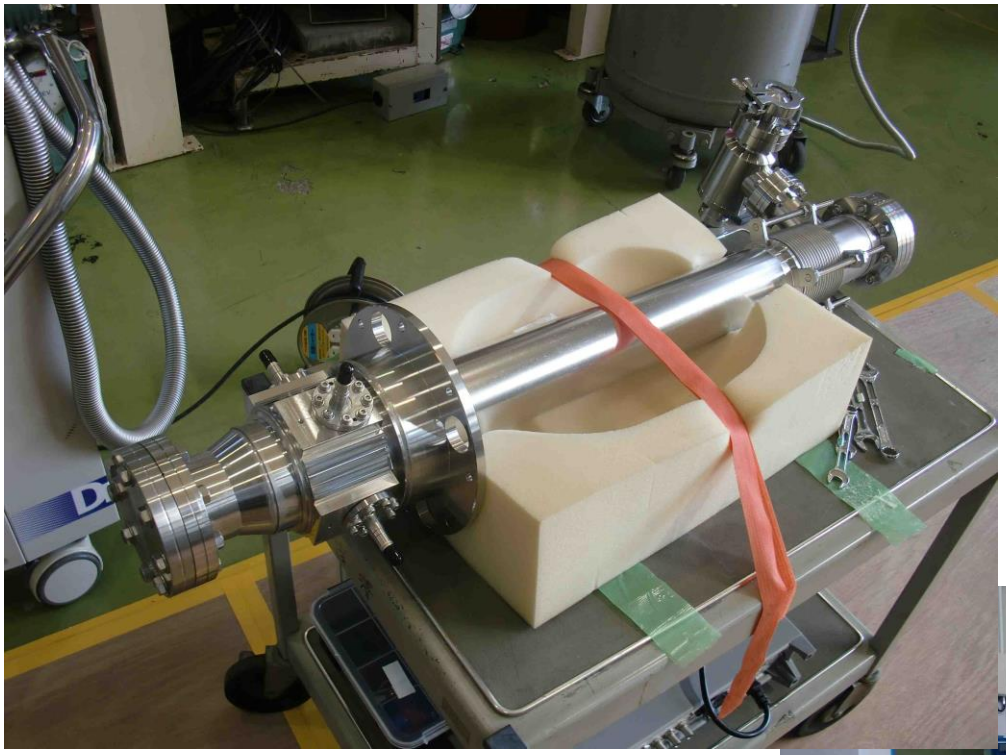

Leak check of BPM (room-temperature)

Leak check of BPM (after LN2 heat shock)

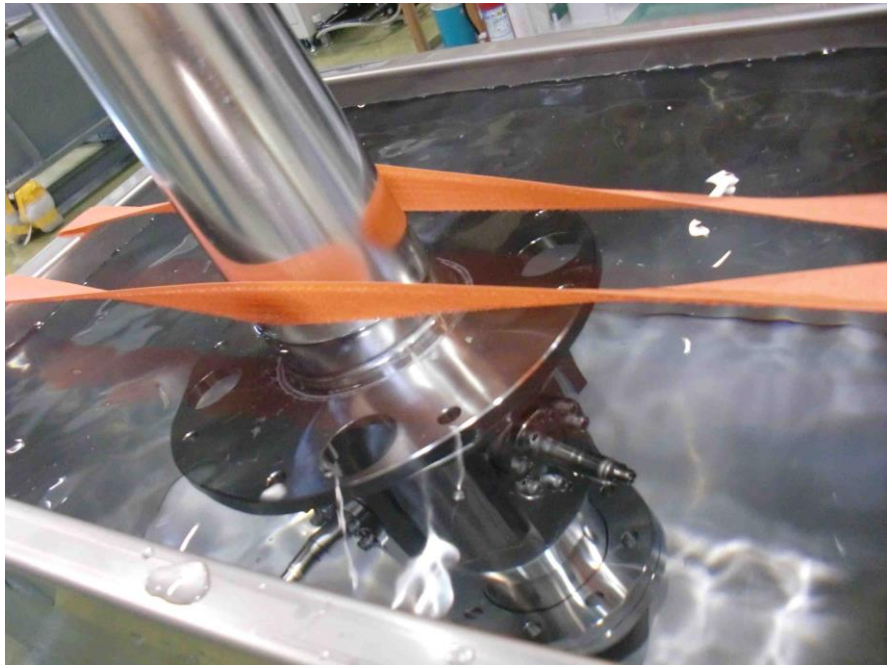

Ultrasonic rinse of BPM (detergent, then UPW)

HPR of BPM (UPW)

Then, BPM was dried and
pump-down in class-10 cleanroom.

Next, BPM was installed
in between 4 cavity trains
using local clean hat in STF tunnel.

Split-quad magnet picture under fabrication

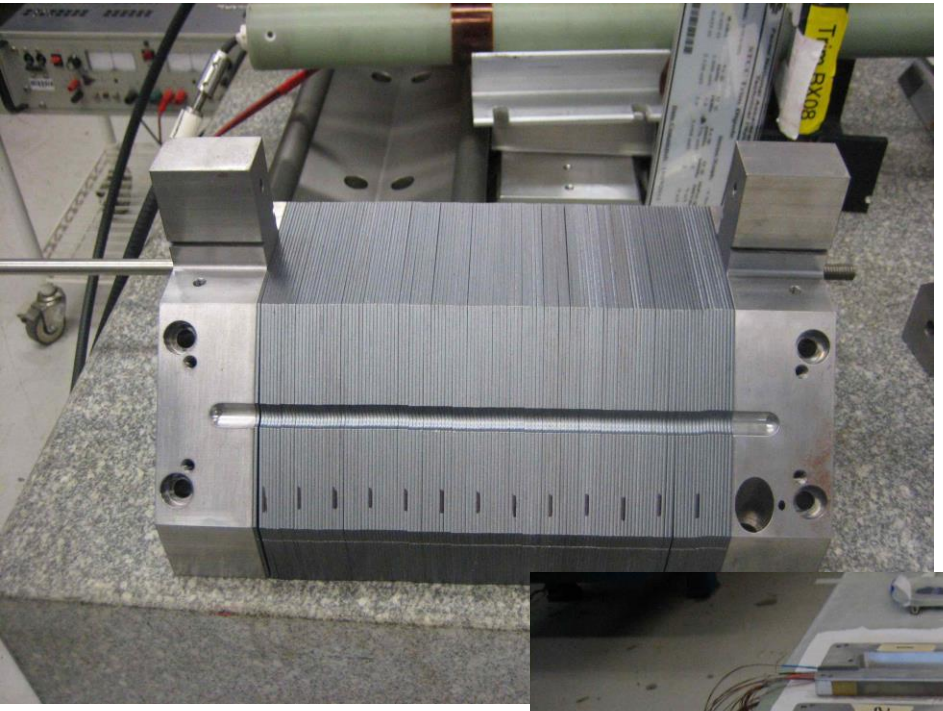

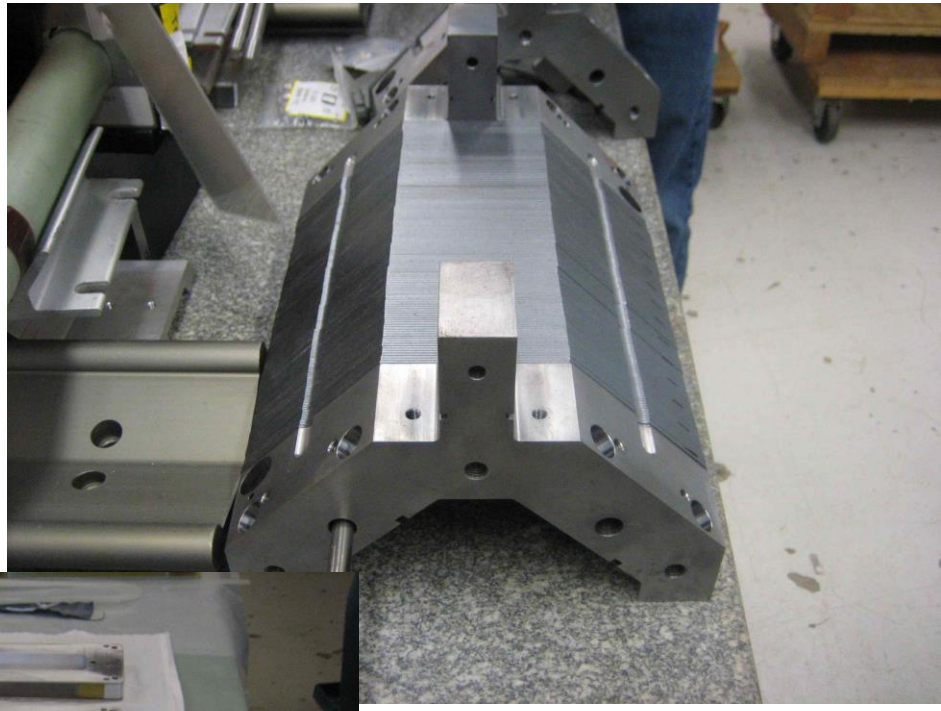

Support of conduction-cool split quad-magnet (FNAL) to GRP

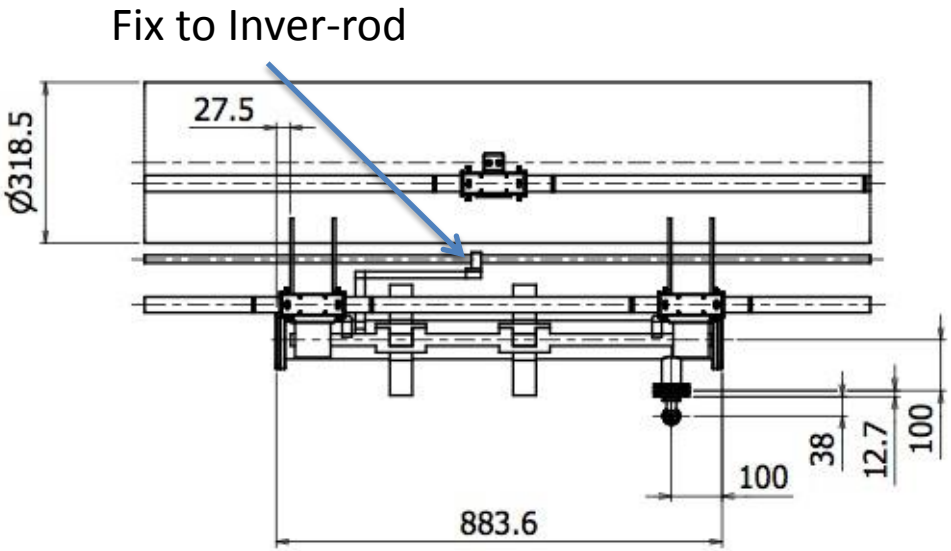

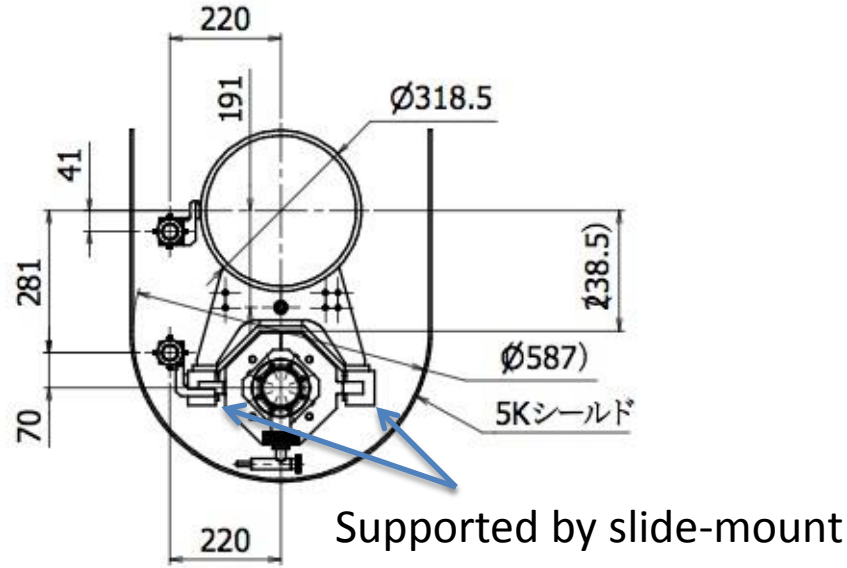

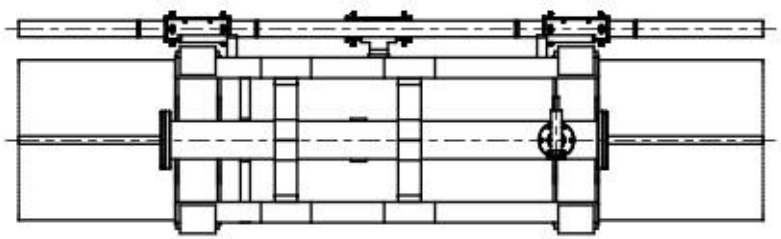

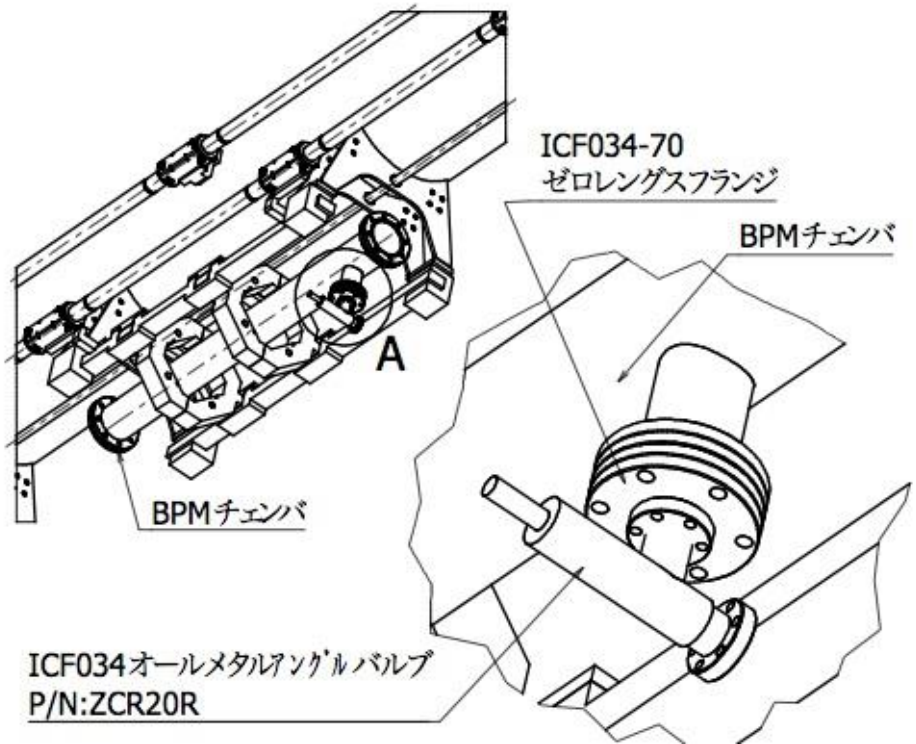

Fit check of conduction-cool split quad-magnet (FNAL) with BPM chamber
Installation practice

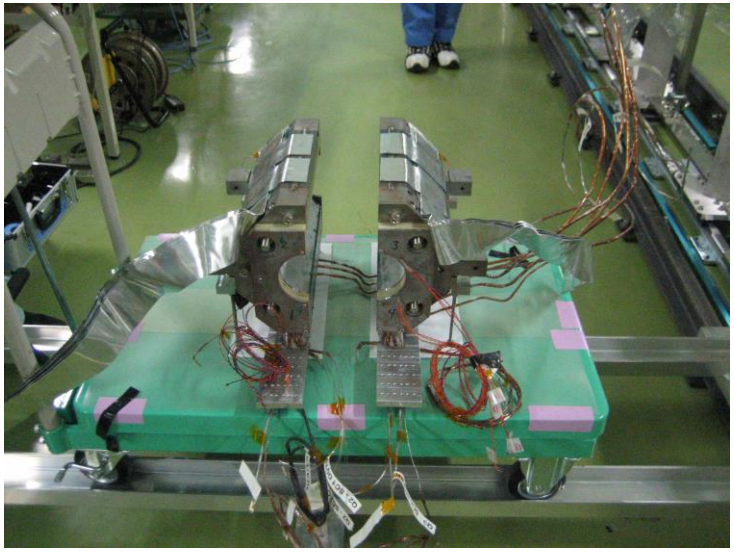

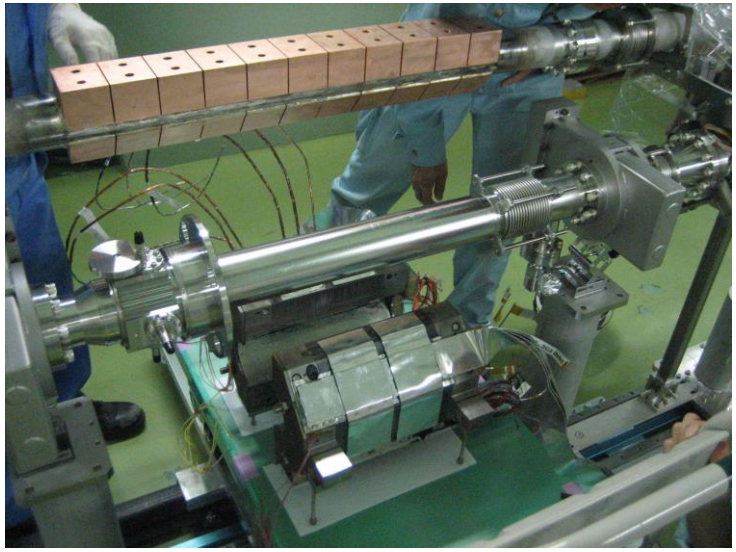

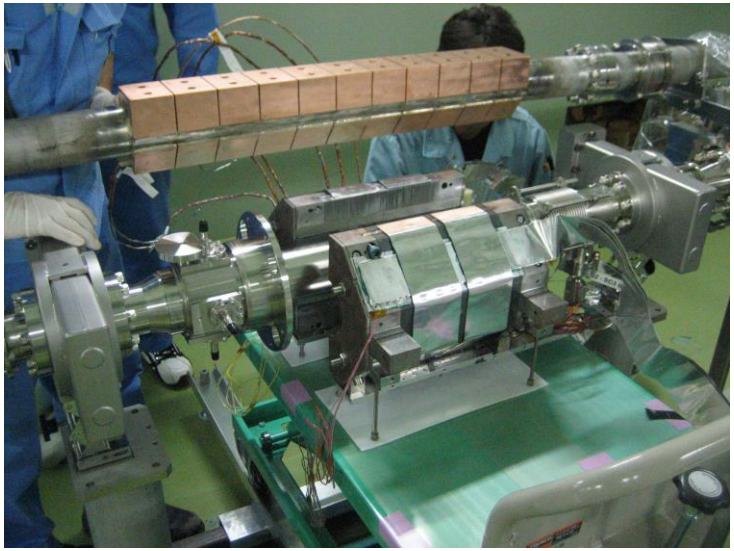

Fit check of conduction-cool split quad-magnet (FNAL) to GRP

Installation practice

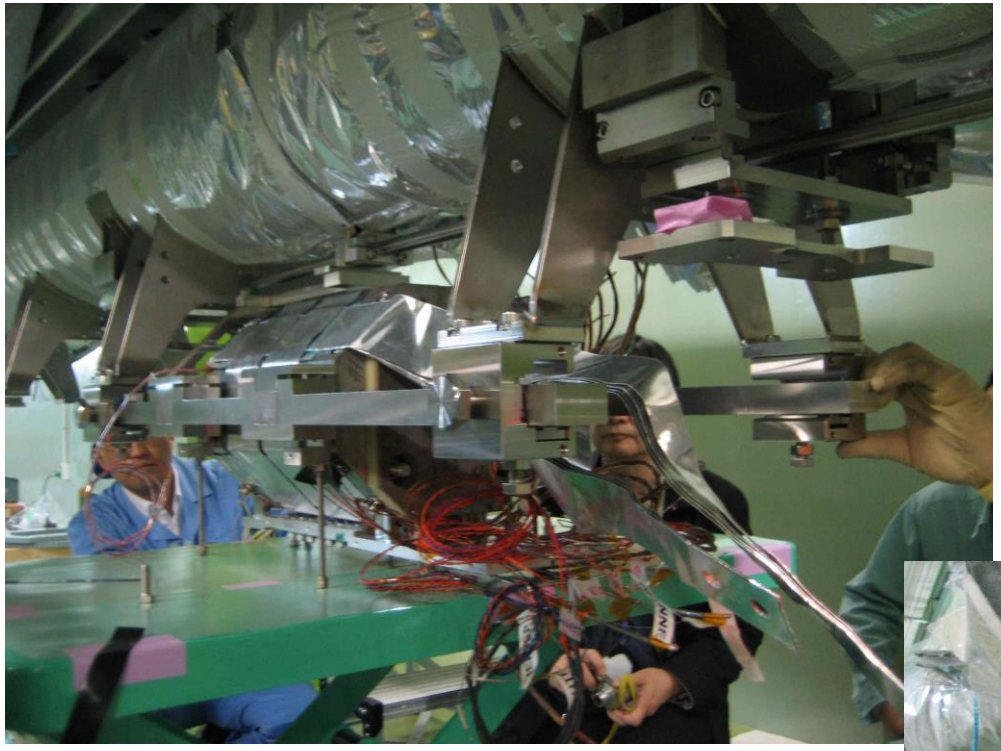

Before Quad-magnet(FNAL) installation

Under installation

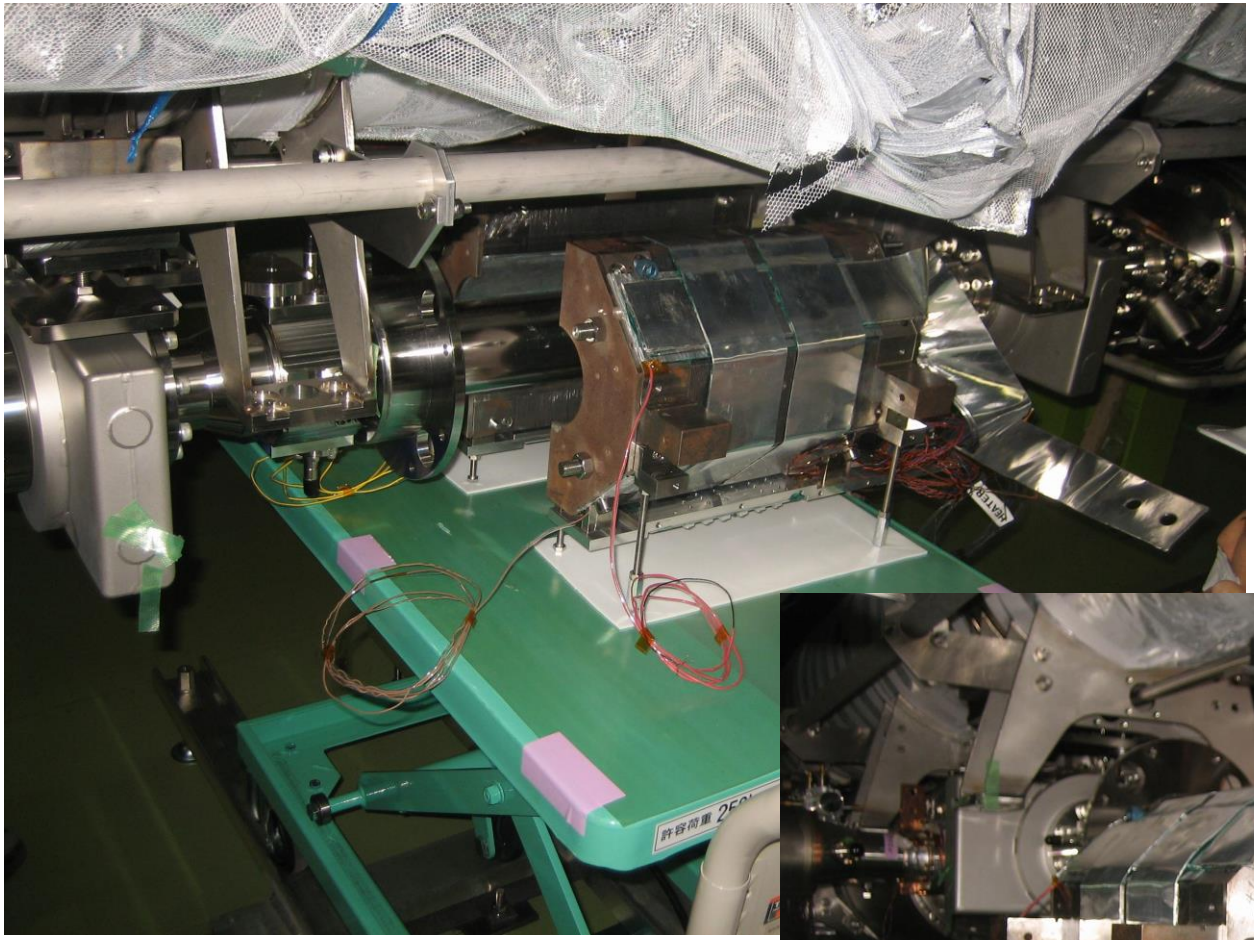

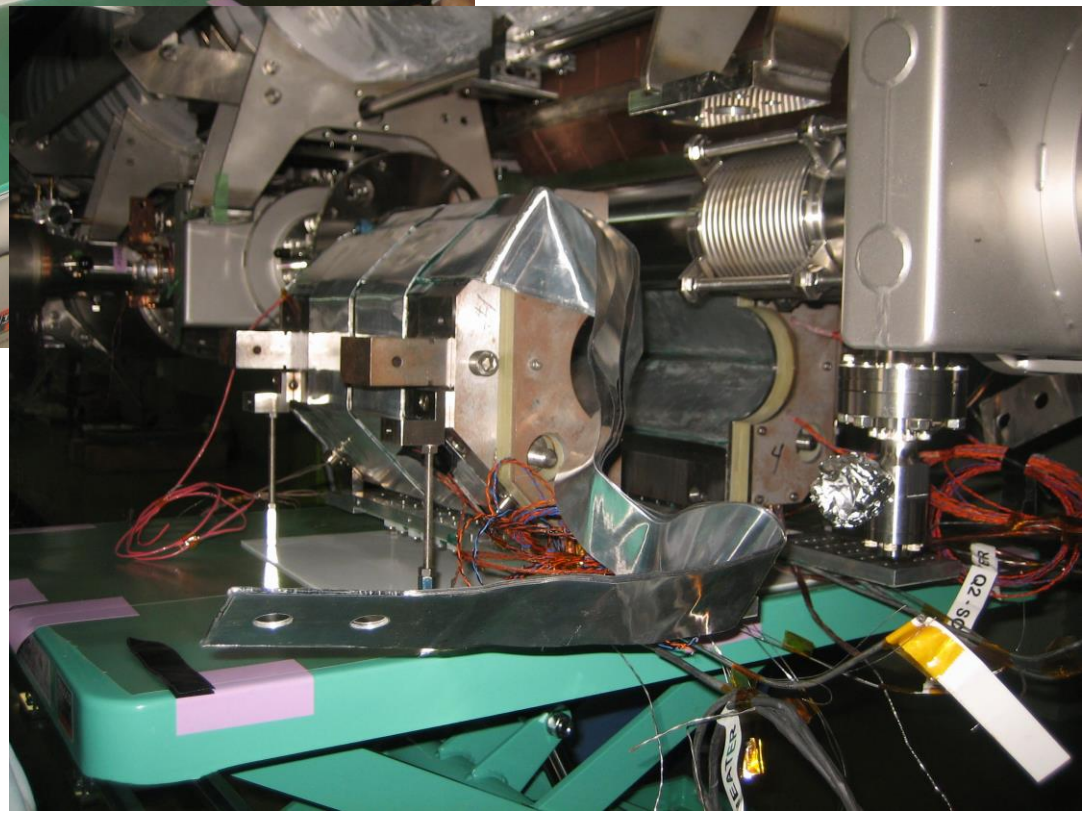

Under installation

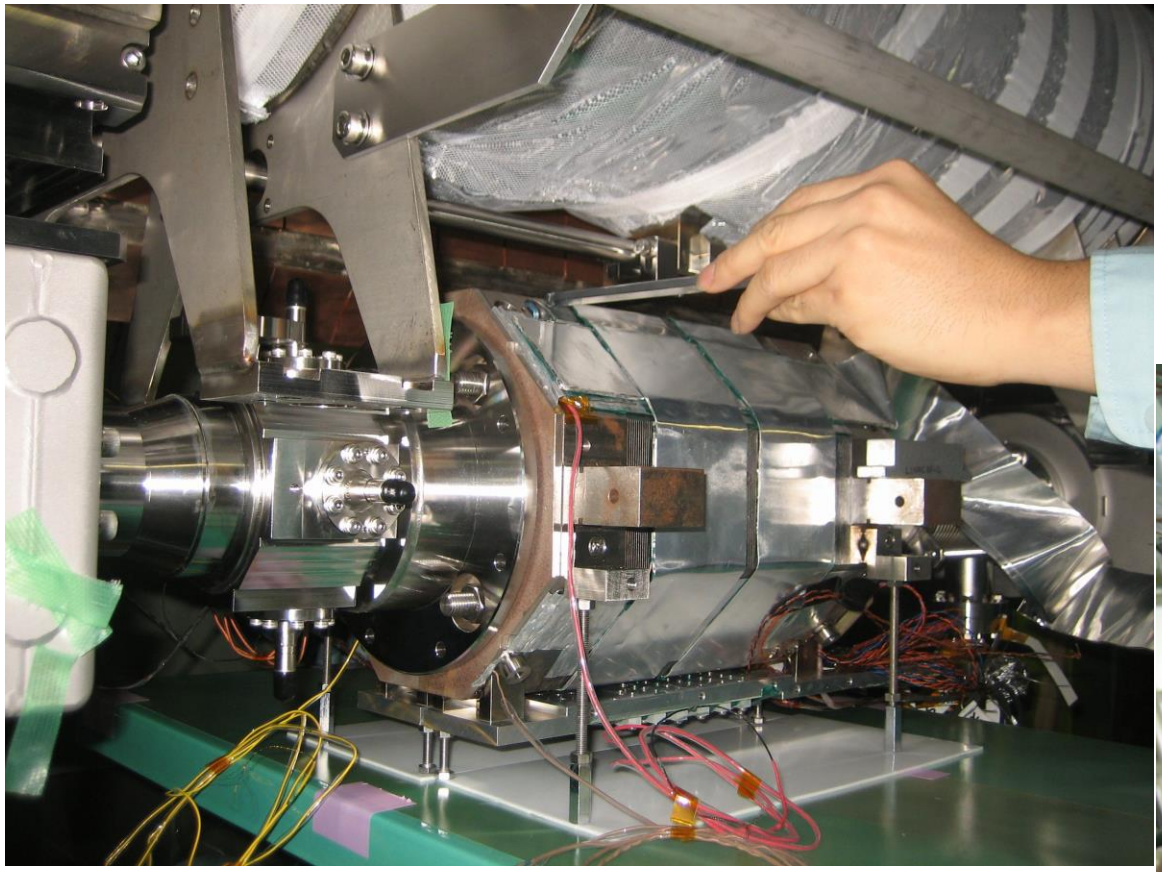

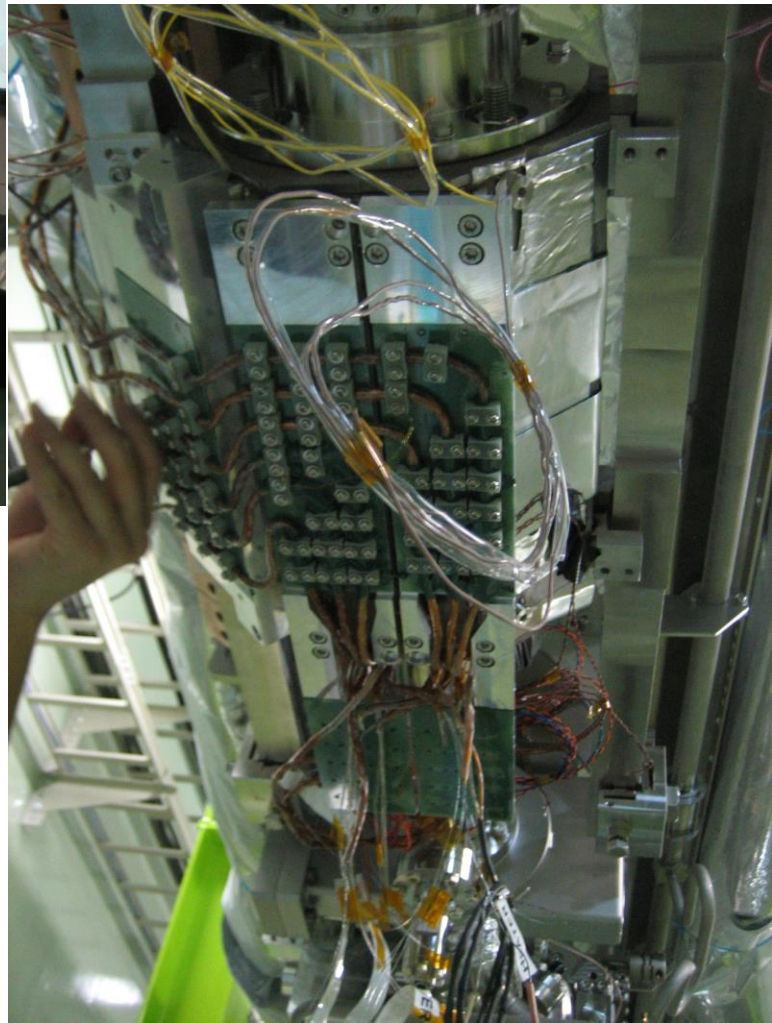

After quad-magnet (FNAL) installation to BPM

Conduction cool split-Quad details (FNAL)

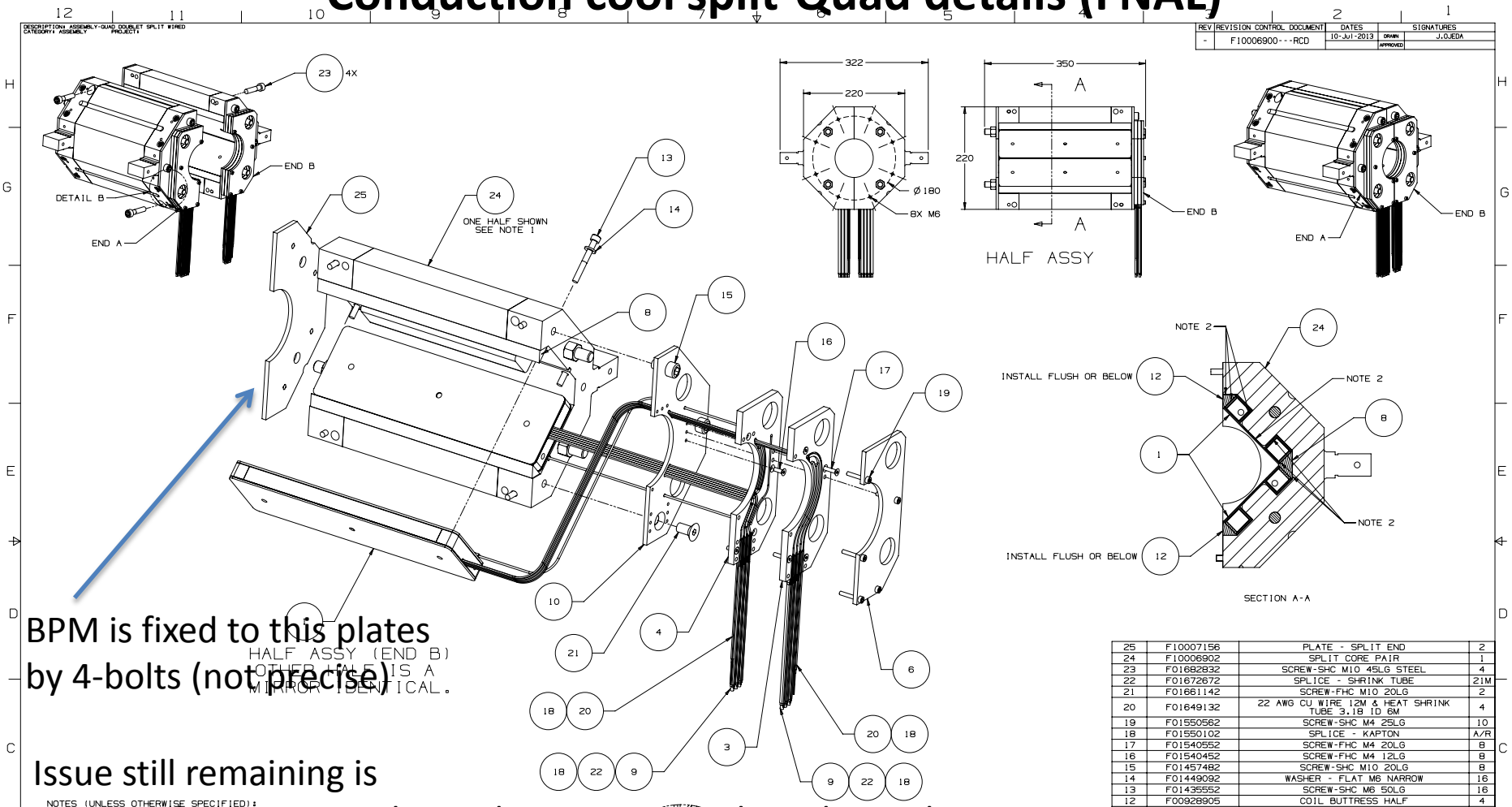

BPM is fixed to this plates by 4-bolts (not precise)

Issue still remaining is How to align BPM mechanical center to quad mechanical center.

This time, there was no reference those two.

NOTES (UNLESS OTHERWISE SPECIFIED):

1. ASSEMBLY TO BE ORIENTED AS SHOWN. ALL ITEMS MUST BE ORIENTED AS SHOWN. COAT HARDCOAT ALL METAL PARTS AS SHOWN.
2. FILL ALL GAPS BETWEEN COIL ASSEMBLIES (ITEM 11), CORE ASSEMBLY (ITEM 24), AND COIL BUTTRESS (ITEM 12 AND 8) WITH STYCAST 2850 MT.
3. MINOR SCALE SLIDE, THE PART SUFFICIENTLY PACKAGED TO PROTECT THE FINISH AND INTEGRITY DURING SHIPMENT AND STORAGE. THE PACKAGE SHALL BE PROMINENTLY MARKED WITH THE PART NUMBER AND REVISION LEVEL.
4. SOLDER WIRES FULL LENGTH TO ITEM 9. WRAP WITH FIVE OVERLAPING LAYERS OF 0.09 THICK KAPTON (ITEM 18). PUT HEAT SHRINK TUBE (ITEM 22) OVER KAPTON AND SHRINK SECURELY PER MANUFACTURERS INSTRUCTIONS.
5. TWIST TOGETHER TWO WIRES (ITEM 20) AND HEATER WIRE WITH APPROXIMATE 25 PITCH AND SOLDER WIRES FULL LENGTH. WRAP WITH FIVE OVERLAPPING LAYERS OF 0.09 THICK KAPTON FILM (ITEM 18). PUT HEAT SHRINK TUBE (ITEM 22) OVER KAPTON AND SHRINK SECURELY PER MANUFACTURERS INSTRUCTIONS.
6. ASSEMBLY MUST BE FREE OF DIRT, GREASE, OIL AND CHIPS.
7. RE-JOIN THE TWO HALVES TOGETHER WITH THE EIGHT M10 SOCKET HEAD SCREWS REFERENCED IN NOTE 1.
8. LABEL ENDS OF WIRES AS SHOWN ON SHEET 2.

ITEM	PART NUMBER	DESCRIPTION	QTY
25	F10007156	PLATE - SPLIT END	2
24	F10006902	SPLIT CORE PAIR	1
23	F01682832	SCREW-SHC M10 45LG STEEL	4
22	F01672672	SPLICE - SHRINK TUBE	21M
21	F01661142	SCREW-FHC M10 20LG	2
20	F01649132	22 AWG CU WIRE 12M & HEAT SHRINK TUBE 3.18 ID 6M	4
19	F01550562	SCREW-SHC M4 25LG	10
18	F01550102	SPLICE - KAPTON	A/R
17	F01540552	SCREW-FHC M4 20LG	8
16	F01540452	SCREW-FHC M4 12LG	8
15	F01457482	SCREW-SHC M10 20LG	8
14	F01449092	WASHER - FLAT M6 NARROW	16
13	F01435552	SCREW-SHC M6 50LG	16
12	F00928905	COIL BUTTRESS HALF	4
11	F00926325	WIRE GUIDE SPLIT LAYER A2	1
10	F00926315	PLATE - END SPLIT B	1
9	F00926275	SPLICE - WIRE - 7AWG	14
8	F00915145	COIL BUTTRESS	2
7	F00915095	WIRE GUIDE SPLIT COVER A3	1
6	F00915085	WIRE GUIDE SPLIT COVER B3	1
5	F00915075	WIRE GUIDE SPLIT LAYER A1	1
4	F00915065	WIRE GUIDE SPLIT LAYER B1	1
3	F00915055	WIRE GUIDE SPLIT LAYER B2	1
2	F00914145	PLATE - END SPLIT A	1
1	F00907935	ASSY - COIL QUAD DOUBLET SPLIT	4

PARTS LIST

UNLESS OTHERWISE SPECIFIED: ±X ±X.X ±X.XX ±X/X ±X° — 2 0.3 0.12 N/A 1°

BREAK ALL SHARP EDGES .015 MAX. DO NOT SCALE DRAWING DIMENSIONS BASED ON ASME Y14.5M-1994 MAX. ALL MACH SURFACES 3.2 DRAWING UNITS: MM

DRAWN J.OJEDA DATE 10-Jul-2013
CHECKED --------- DATE
APPROVED DATE
USED ON 926175
MATERIAL SEE PARTS LIST
GROUP: Technical Division - Design and Drafting CAGE CODE: 0U5R6

FERMI NATIONAL ACCELERATOR LABORATORY
UNITED STATES DEPARTMENT OF ENERGY

NAME: ASSY - QUAD SPLIT WIRED
SCALE 1:2 AS SHOWN SIZE A1 DRAWING NUMBER F10006900 SHEET 1 of 2 REV -

Conduction cool blade/current lead details (KEK)

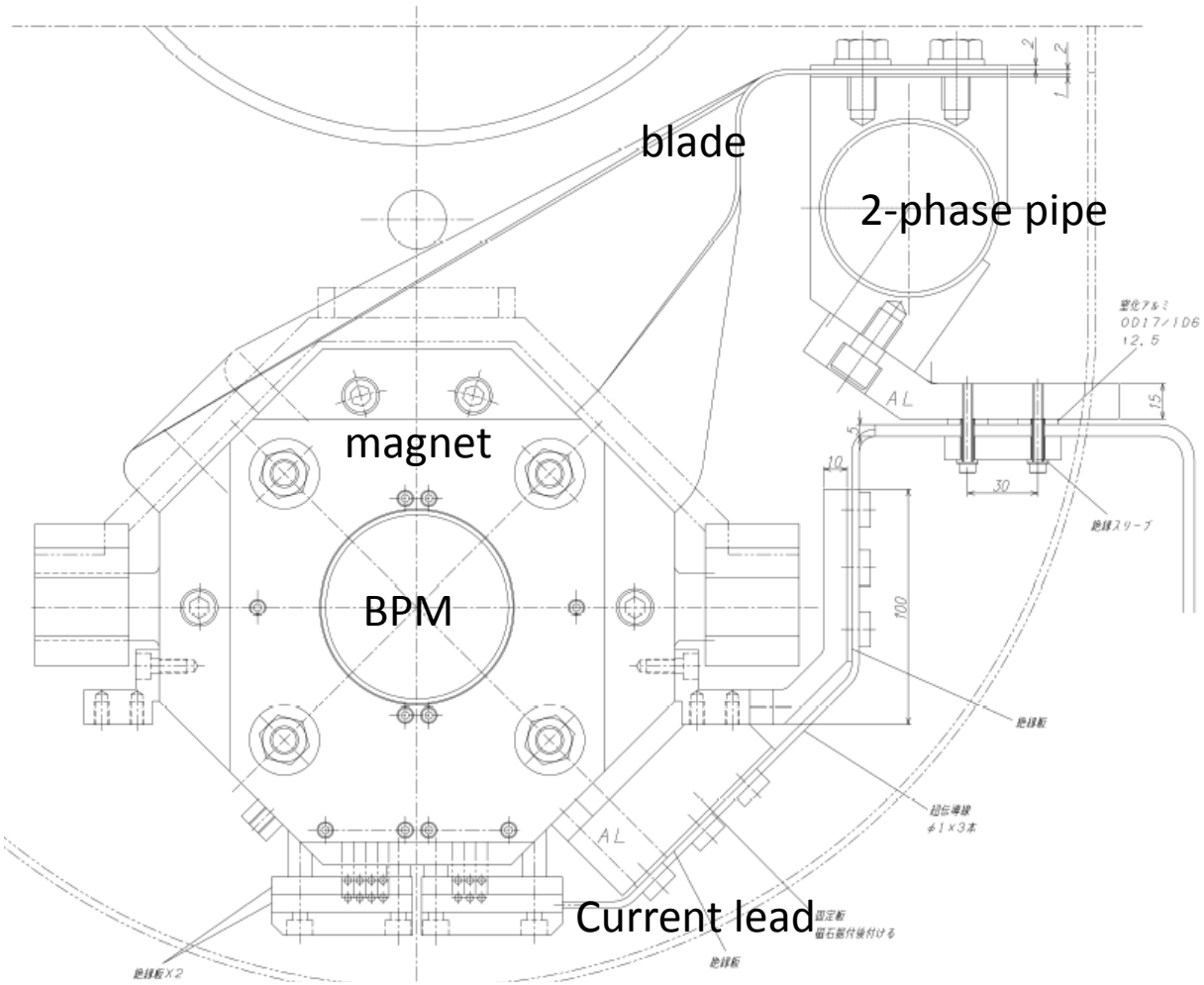

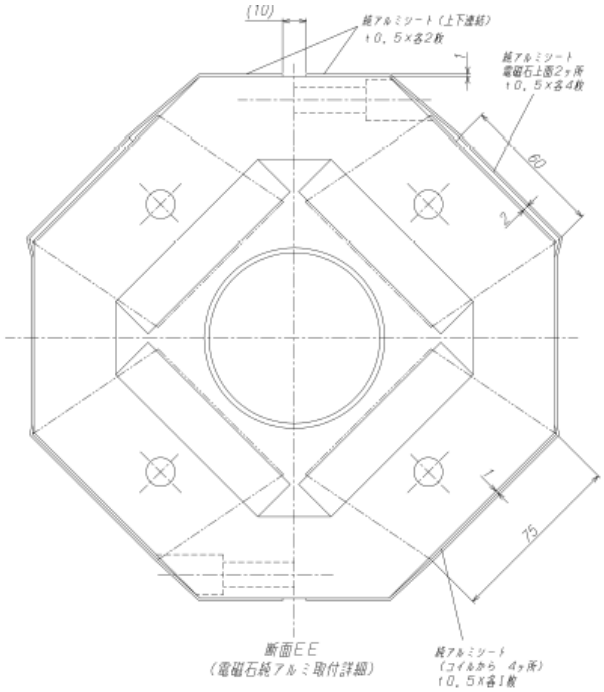

Summary

1. Proto-type BPM was fabricated, and electrical center scan is under study.

2. Vacuum tight model:
   one was fabricated in KEK, two are under fabrication in KNU(Korea)
   They will be installed in ATF for resolution estimation.

3. CM-1 BPM was fabricated, and installed into cryomodule CM-1.
   Cool-down test will be Oct. 2014.

4. Issues still need to be considered;
   precise measurement of electrical center
   confirmation of common-mode suppression
   mechanical reference of BPM and Quad for combined installation
   resolution estimation by established method(three-BPM method)
   cryomodule installation with clean, no leak, no heat, etc.