SDHCAL Status

I.Laktineh

Outline

- Technological prototype
- R&D toward ILD
- SDHCAL software status

Technological prototype

- → First technological calorimeter
- → Built in 2011 and successfully tested since
- → Fulfils the requirement of efficiency, compactness, power-consumption
- → Power-pulsed, auto-trigger
- → Self-supporting mechanical structure
- → 48 (+2) layers :
  20 mm absorber + 6 mm active layer+2 mm of clearance
  > 6 λ_I
- → 1x1 cm^2 lateral segmentation
  460000 channels

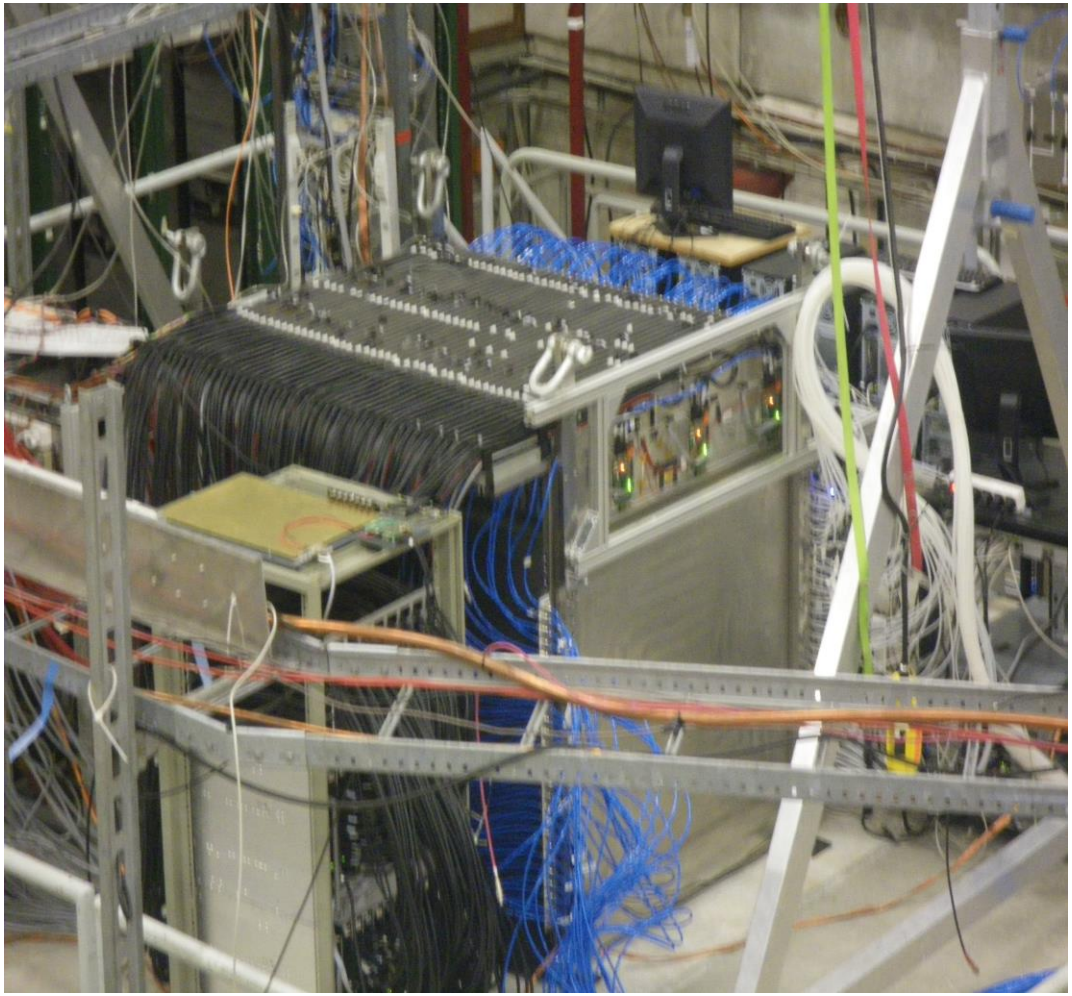

SDHCAL prototype construction

- ✓ 10500 ASIC were tested and calibrated using a dedicated robot that was used by CMS (IPNL, OMEGA) (ASICs layout : 93%).
- ✓ 310 PCBs were produced, cabled and tested (IPNL). They were assembled by sets of six to make 1m^2 ASUs
- ✓ 170 DIF(LAPP), 20 DCC(LLR) were built and tested.
- ✓ 50 detectors were built and assembled with their electronics into cassettes. Cassettes were tested by sets of 6 using a cosmic test bench (IPNL).
- ✓ The mechanical structure was built in CIEMAT.
- ✓ HV, cooling services were built by UCL, Gent.
- ✓ Full assembly took place at CERN.

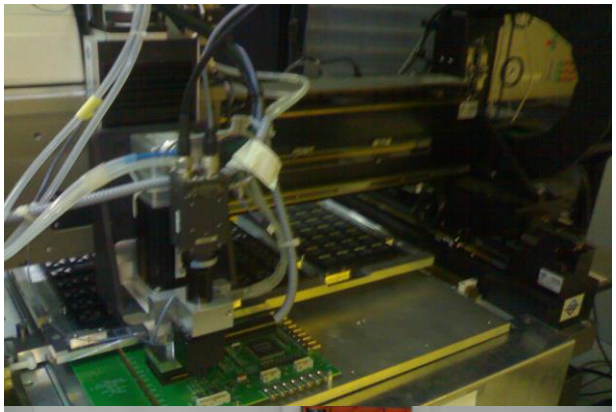

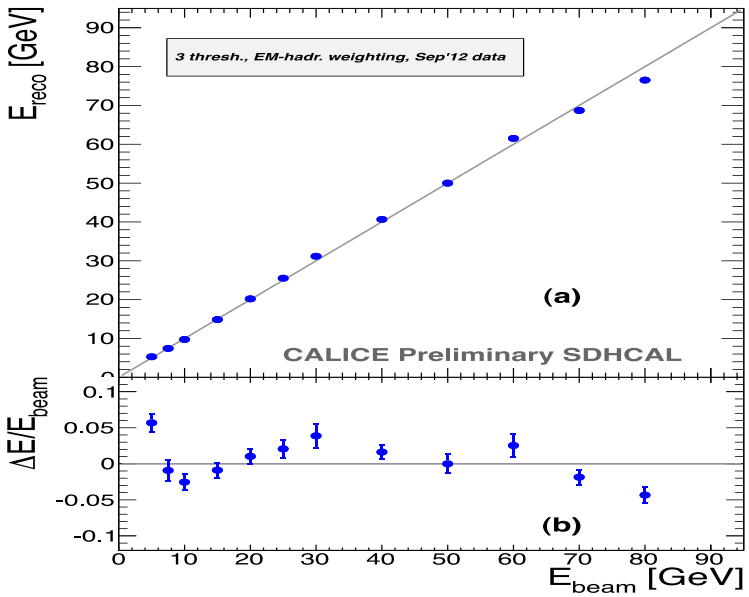

First period (SPS-H6)

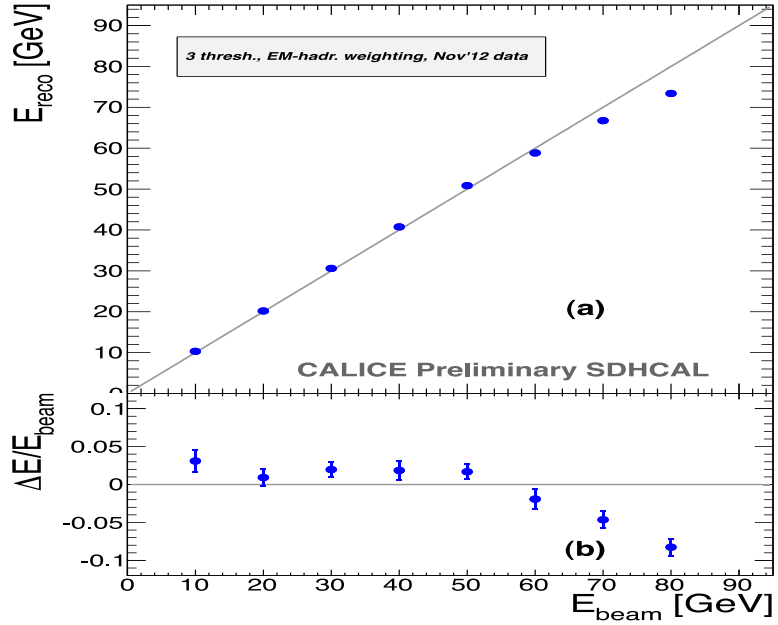

Second period (SPS-H2)

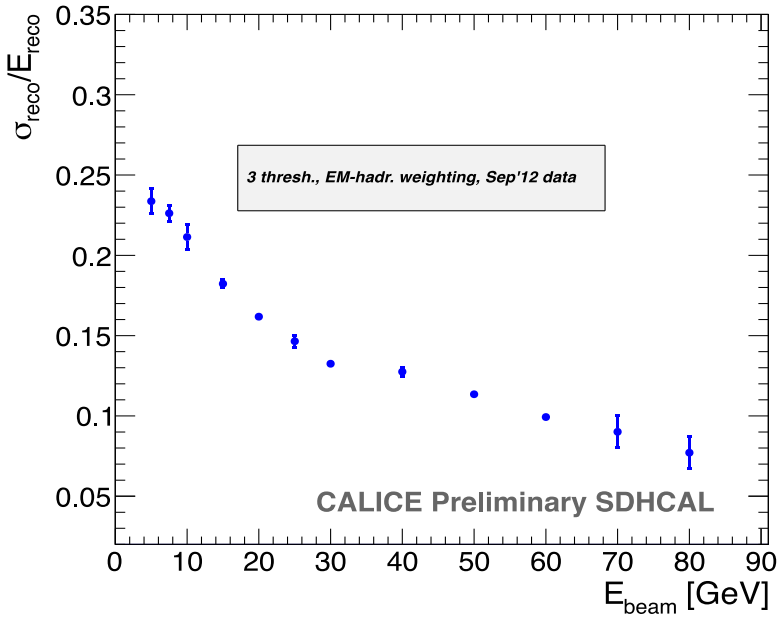

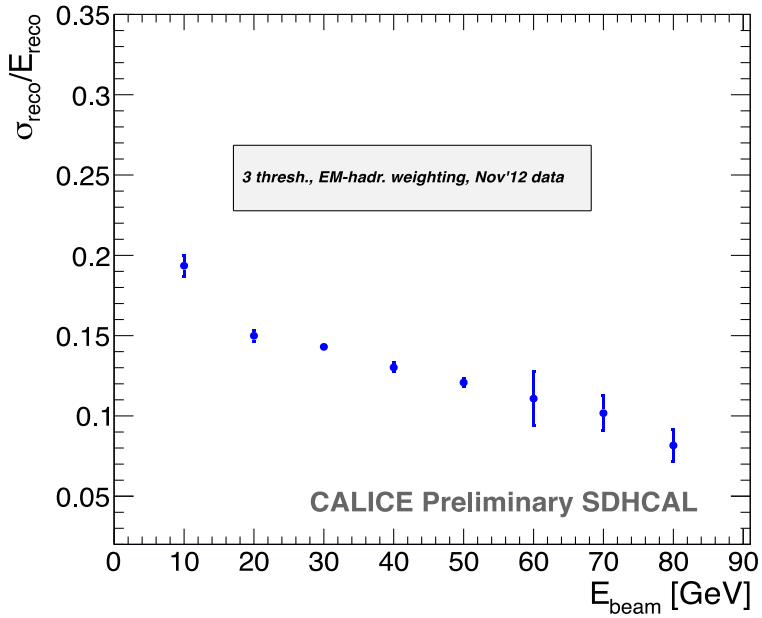

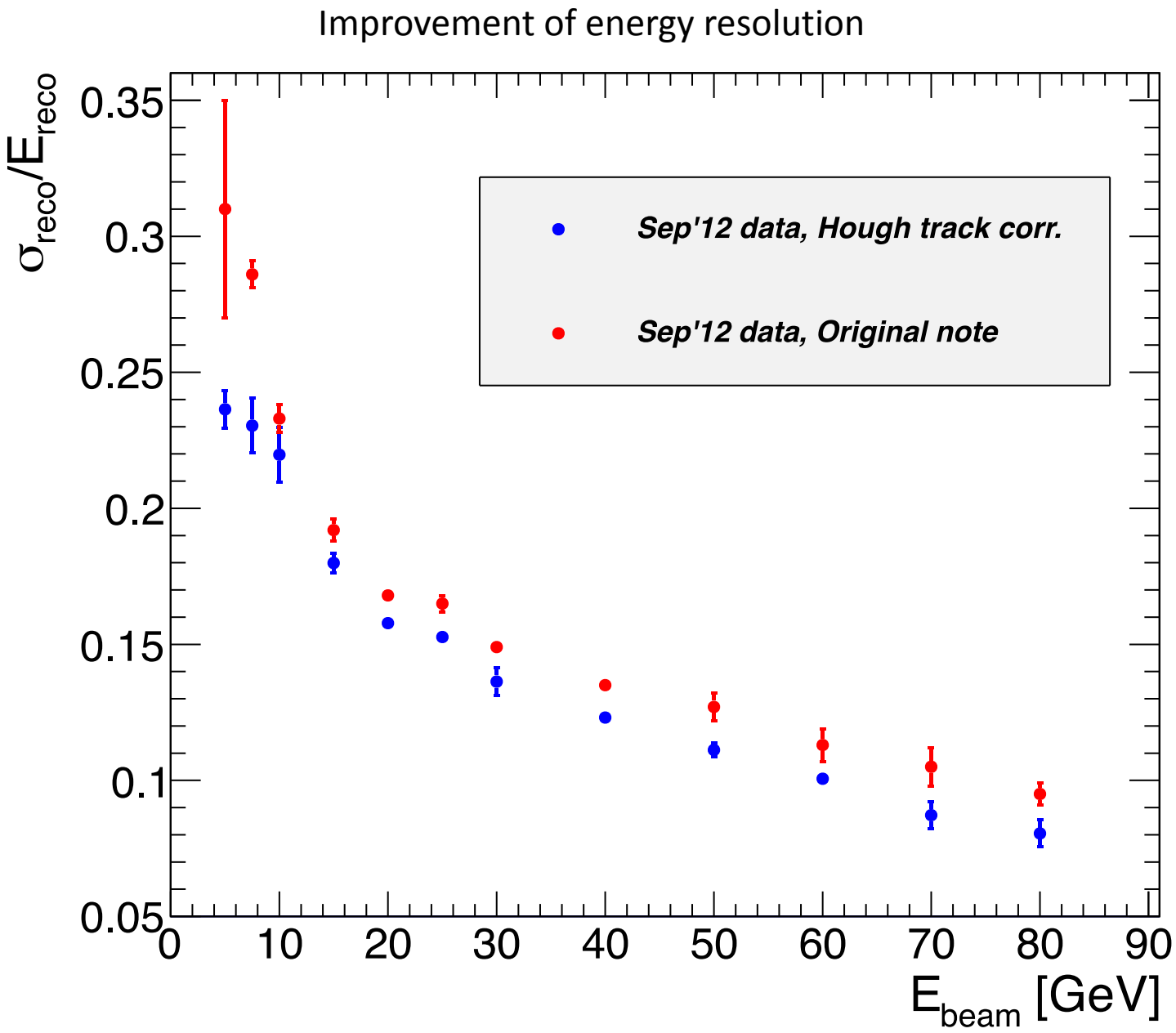
Improvement of energy resolution
σ_{reco}/E_{reco}
0.35
0.3
0.25
0.2
0.15
0.1
0.05
0
10
20
30
40
50
60
70
80
90
E_{beam} [GeV]
Sep'12 data, Hough track corr.
Sep'12 data, Original note

Ongoing analyses

→ Calibration study;
→Electron-Pion separation;
→ Energy resolution improvement by taking into account hadronic shower structure and calibration correction: *an improvement of 7-15% already achieved with respect to the preliminary ones obtained immediately after TB;*
→ Imaging algorithm developments (HT, Arbor, MST) → PFA

Hough Transform

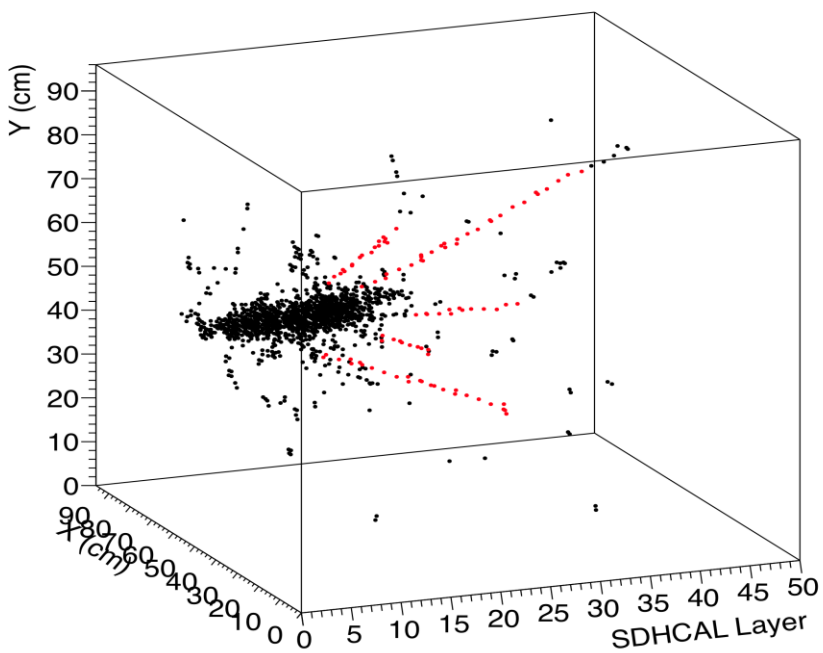

Arbor, MST..

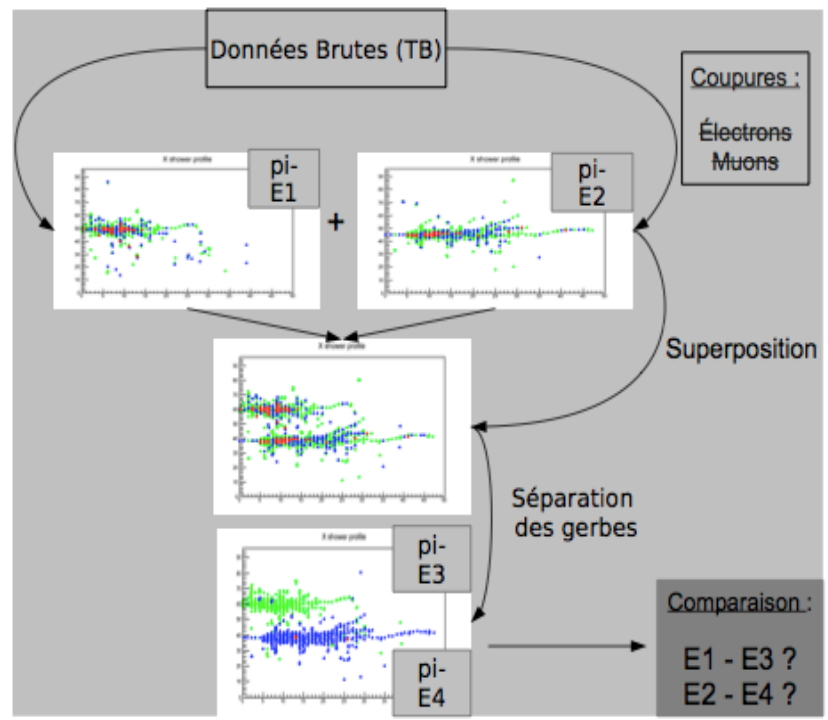

Toward ILD

Having validated the SDHCAL concept, we intend to demonstrate completely the capability of building the SDHCAL modules for ILD by building large fully instrumented active layers and implement the improvement realized on electronic readout

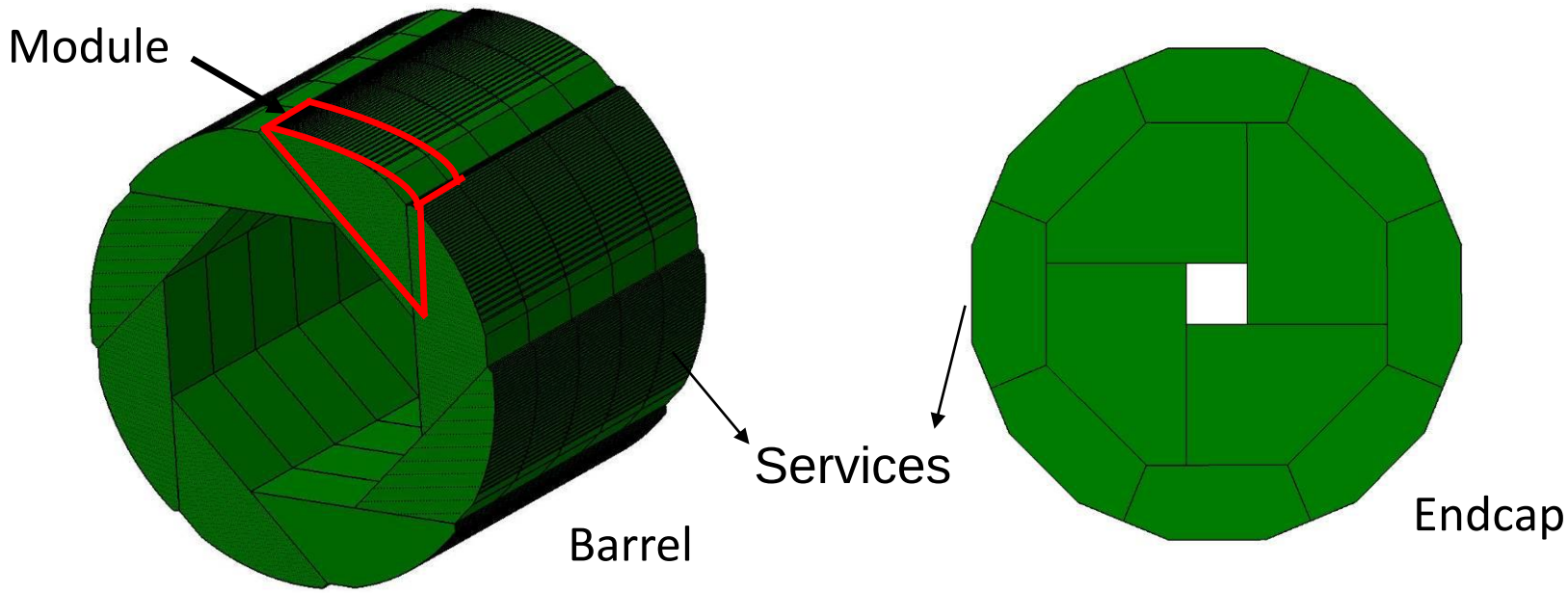

New version of the readout electronics

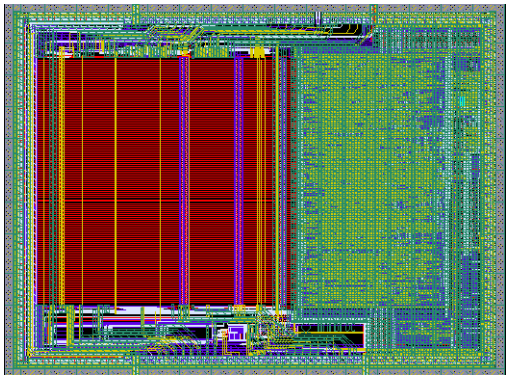

The new version brings improvements on the previous one:

→Independent channels and zero suppression

→Independent ASICs (I2C)

→Better dynamic range (up to 50 pC).

successfully tested;

600 are beingg produced to equip few large GRPC

New ASU design for large detectors is being finalized

New features in the DAQ boards

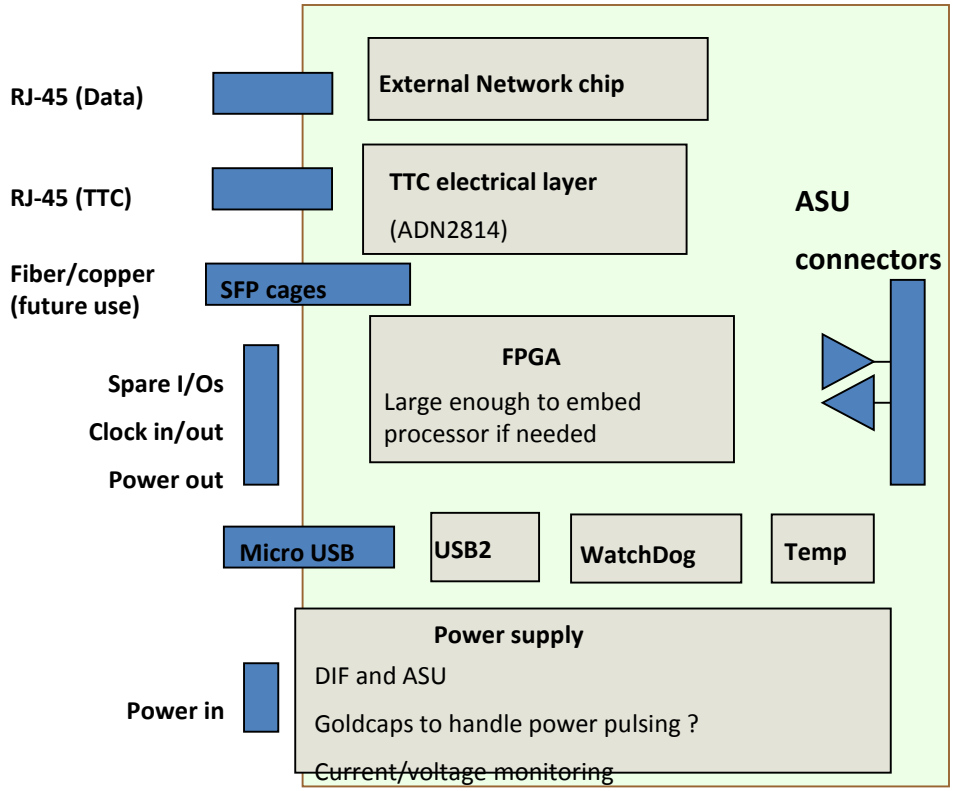

→ Only one DIF per plane. For the maximum length plane (1x3m) the DIF will handle 432 HR3 chips;

→ Slow control through the new HR3 I2C bus;

→ Data transmission to DAQ by Ethernet using commercial switches for concentration;

→ Clock and synchronization by TTC;

Synergy with R&D on fast links R&D of LHC (GBT)

Detector improvement : to achieve same performances with very large GRPCs

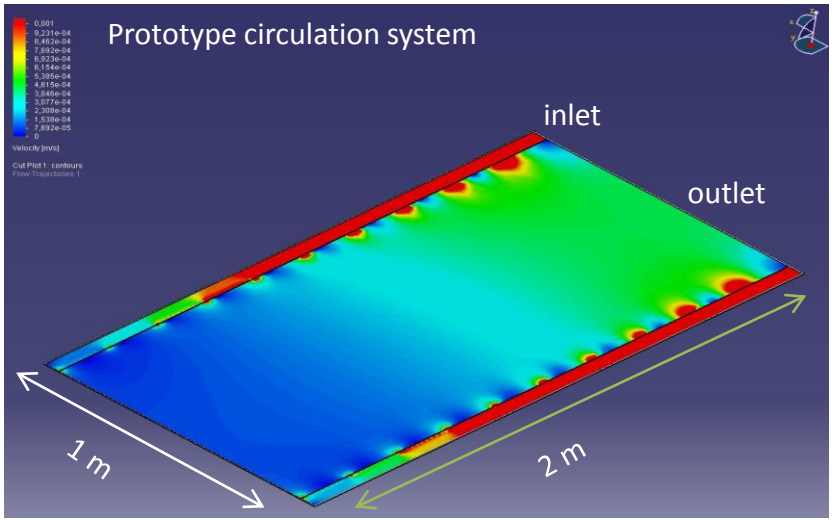

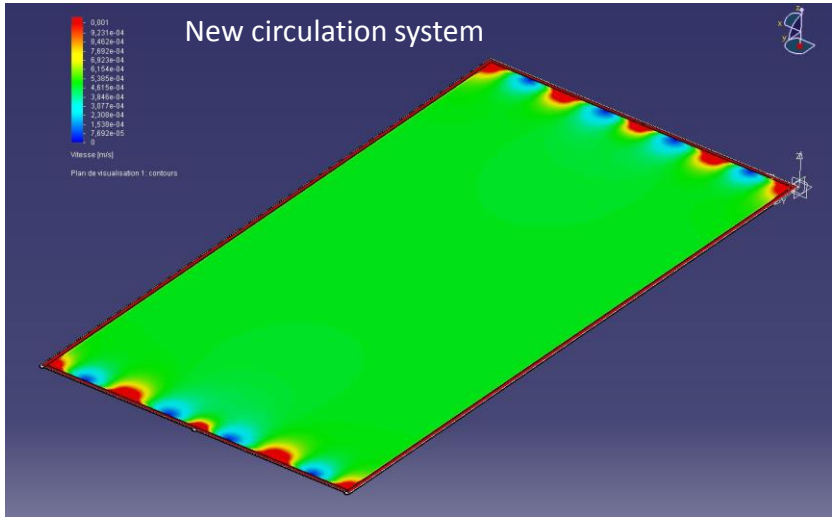

Mechanical structure : to be built with EBW techniques and to host few large detectors GRPCs

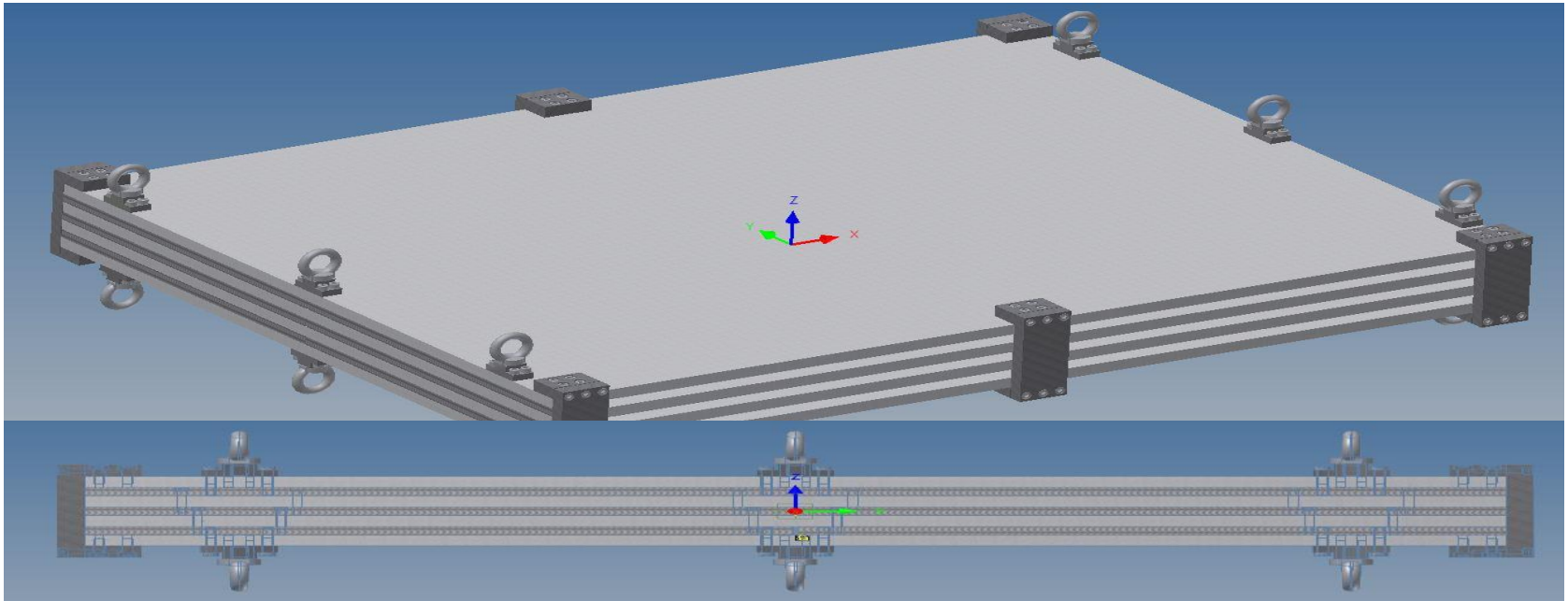

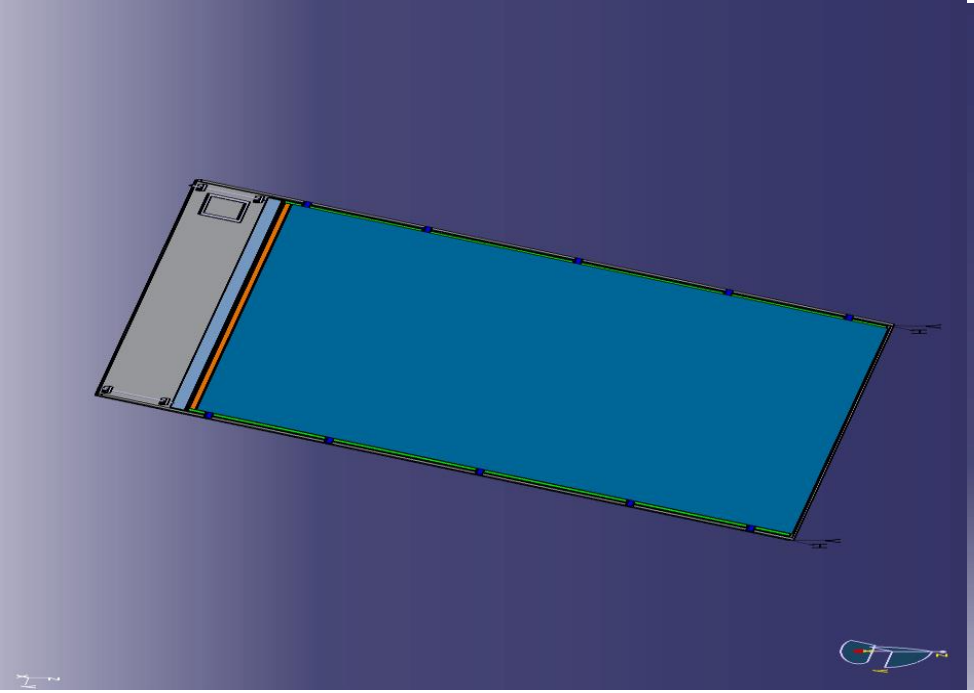

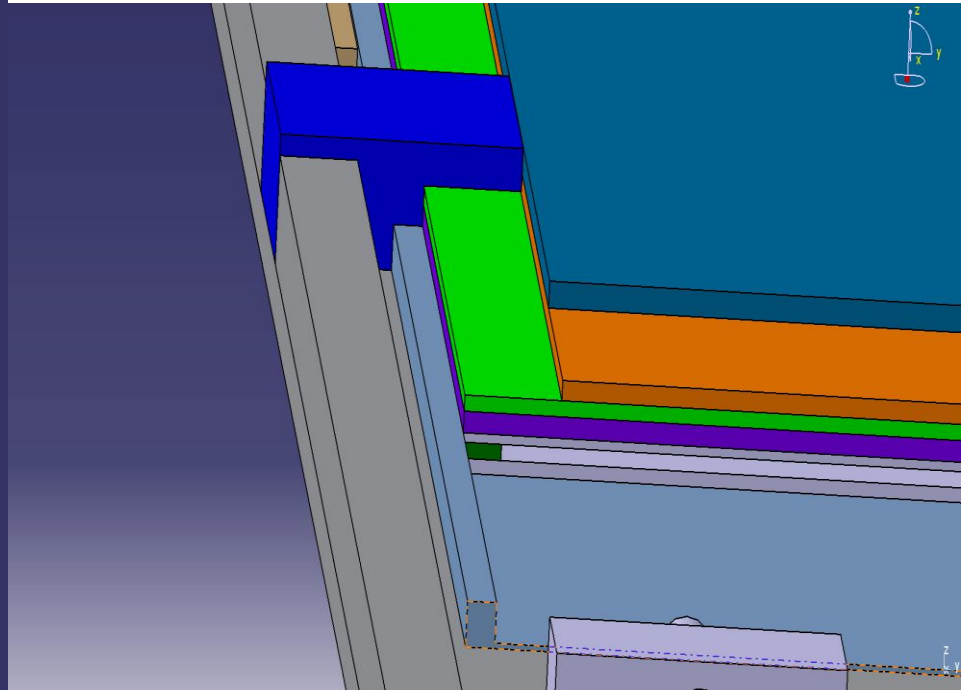

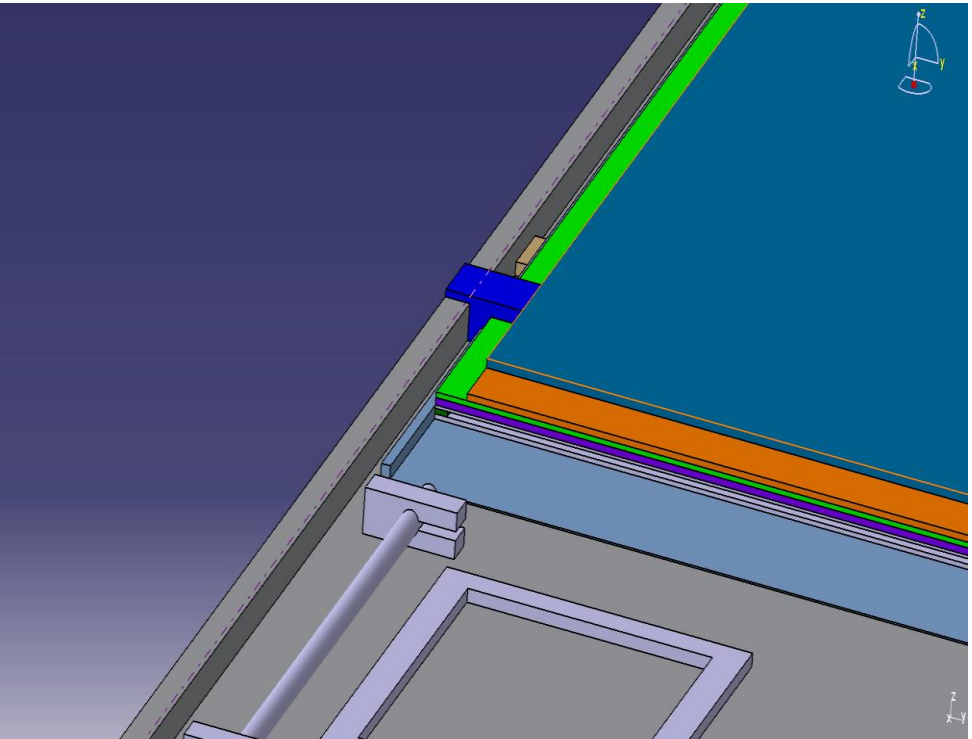

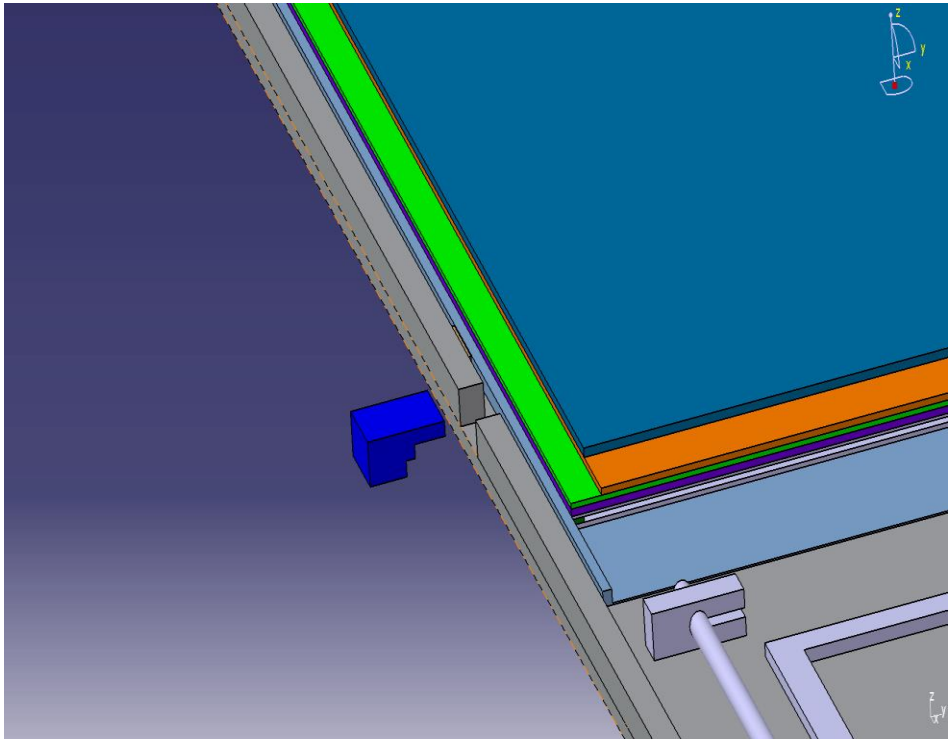

A small prototype was welded by EBW process at CERN.

Tests were then performed on planarity. Results are slightly below expectation but new trials are being programmed to improve on the procedure.

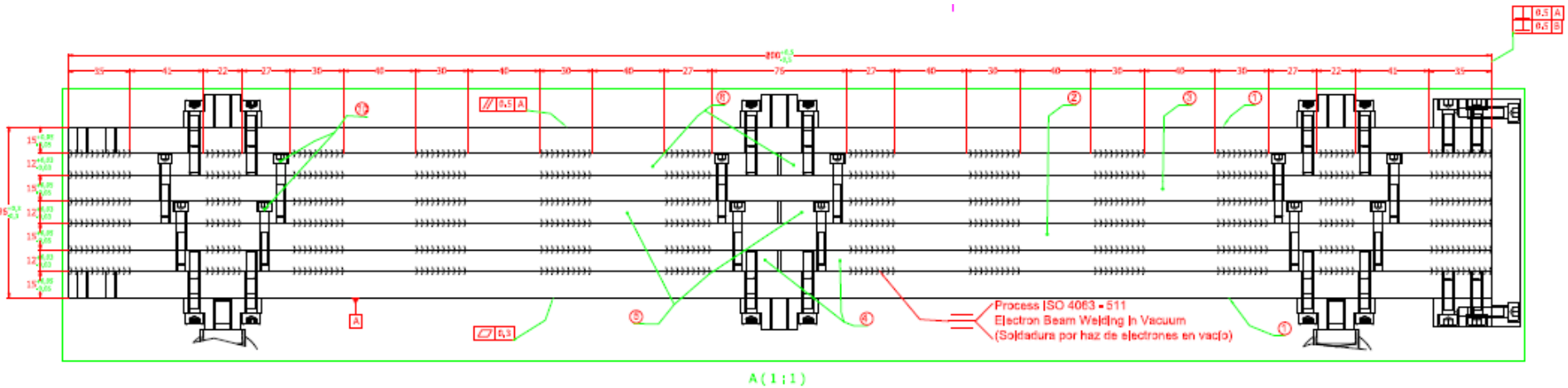

Made by Electron Beam Welding proccess In Vacuum,
Welding deep of 5 mm,

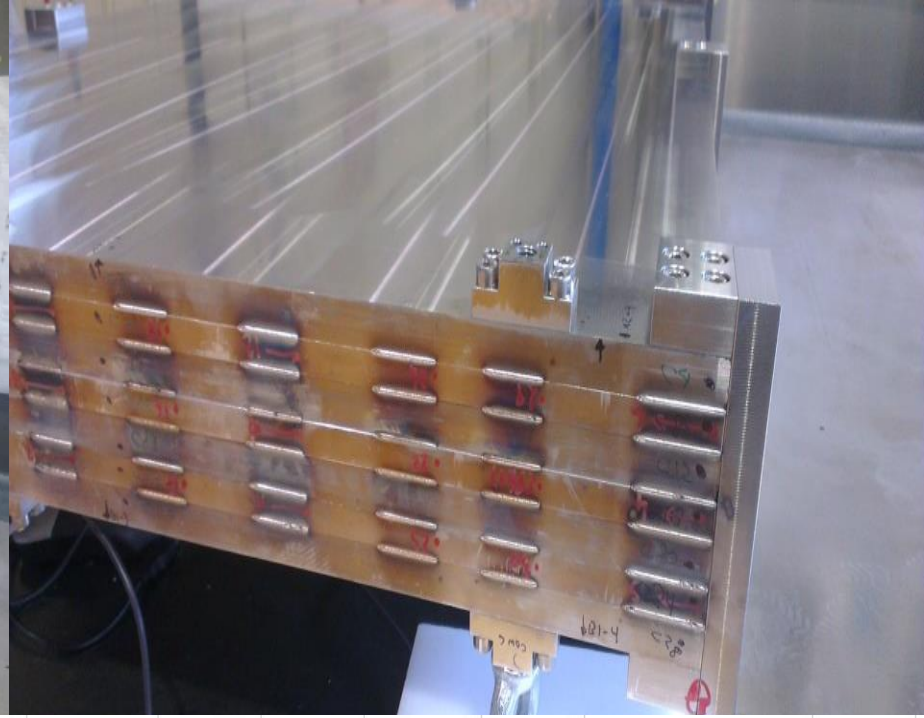

Accuracy of the measrure machine +-0.04mm

A2 on top

Pln A2	before weld	EBW	difference	EBW-without rigidity pieces	difference
Z	0,00	0,03	-0,04	-0,02	0,05
dF	0,23	0,65	-0,42	1,31	-0,66
Pln C					
X	0,17	0,06	0,12	0,05	0,01
dF	0,40	0,47	-0,07	0,46	0,02
Pln D					
X	1039,29	1039,26	0,04	1039,18	0,07
dF	0,53	0,54	-0,01	0,52	0,03
Pln E					
Y	0,06	0,06	0,01	0,08	-0,02
dF	0,15	0,14	0,01	0,14	0,01
Pln F					
Y	800,04	800,03	0,01	800,00	0,03
dF	0,17	0,21	-0,04	0,21	0,01
Pln B1(BORDE_y_lateral)					
Z	96,13	96,33	-0,21	96,91	-0,57
dF	0,33	0,34	-0,01	1,11	-0,77

Calorimeter rotated around Y-axis, to do the other measure.

B1 on top

	Pln A2	before weld	EBW	difference	EBW-without rigidity pieces	difference
Es el B1	Z	0,01	0,02	-0,01	0,08	-0,05
	dF	0,41	0,44	-0,03	0,92	-0,48
Es el D	Pln C					
	X	0,05	-0,08	0,13	-0,06	-0,02
	dF	0,54	0,52	0,02	0,54	-0,03
Es el C	Pln D					
	X	1039,22	1039,12	0,11	1039,52	-0,40
	dF	0,40	0,47	-0,07	0,48	-0,01
	Pln E					
	Y	-0,08	-0,09	0,01	-0,08	-0,01
	dF	0,18	0,15	0,02	0,16	-0,01
	Pln F					
	Y	799,91	799,89	0,02	800,00	-0,12
	dF	0,19	0,18	0,01	0,19	-0,01
Es la A2	Pln B1(BORDE_y_lateral)					
	Z	96,12	96,30	-0,19	96,93	-0,63
	dF	0,43	0,61	-0,17	1,60	-0,99

SDHCAL SOFTWARE

- Repository
- Data construction
- DAQ
- Monitoring
- Simulation
- Digitizer
- PFA developments
- Energy calibration

Repository

Portions of the SDHCAL software have been put in a **GIT** repository on https://github.com/SDHCAL

All the code specific to SDHCAL will be put here except:

- ❑ The digitizer which is part of the MarlinReco package
- ❑ The ILD simulation which is part of Mokka/lcgeo

Data Reconstruction

Raw Data Format

The SDHCAL prototype DAQ writes its Raw Data as buffers inside LCGenericObject.

Data reconstruction

→ Software to convert raw data to LCIO Calorimeter Hit has been repackaged and expanded to cope with new test beam cases.

→ Previous program called Trivent (available in the DESY svn repository) has been rewritten into a GIT package named EventBuilder (see https://github.com/SDHCAL/EventBuilder).

DAQ

→ SDHCAL DAQ software is based on CMS XDAQ. Software versions are managed on local subversion systems.
→ Configuration data are stored in an Oracle database.

No immediate project to interface the configuration data with ilcsoft condition data software.

Monitoring

Monitoring software used during Test Beams is currently gathered and updated into GIT packages. It is being improved continuously.

Simulation

Prototype

→ The GIT package SDHCALSim is a standalone Geant4 simulation of the SDHCAL prototype.
→ The small size of the programme makes it very flexible to test new ideas.
→ The last version outputs events as LCIO SimCalorimeterHit collection and LCGenericObject collection for the extra step information needed for the digitizer.

ILD

→ ILD simulation done with the legacy program Mokka (development halted). It outputs events as SimCalorimeterHit collections only.
→ Some physics channels **locally** simulated with **ILCDirac** (e e → ZZ, WW , HZ)
→ Work to optimize ILD SDHCAL (ILD Model 2) is being worked out.
→ Work has just started to move SDHCAL simulation to **DD4HEP/lcgeo**.

Digitizer

SimDigital processor

→A Marlin Processor belonging to MarlinReco.
→Converts SimCalorimeterHits into CalorimeterHits
→Lots of recent improvements based on deeper comparison with test beam data

Digitizer recent improvements

→ Simulates the GRPC response to particles going through (Geant4 steps)
→ Better description of muon hits effciency versus threshold curves.
→ Can use an 'effciency map' to simulate detector dead zones and quencher effects..etc.
→ Correction related to particle crossing angles available with more steps initialisation (prototype simulation only but to be implemented in MarlinReco soon).

PFA

Pandora

Collaboration has just started with Mark Thomson team (S.Green and J. Marchall) to improve SDHCAL Pandora Reconstruction (ILD model option 2).

ArborPFA

→ A PFA based on a new implementation of ARBOR Algorithm as the one with Pandora (PandoraSDK framework)

→ Available in the SDHCAL git repository

Energy calibration

→ Energy is reconstructed as a quadratic function of the number of hits (of each threshold).

→ Software to calibrate the quadratic coeffcients of the function (not released yet).

Energy reconstruction

Studies of better ways to reconstruct energies are ongoing bases on Multi Variable analysis techniques.

Conclusion

→ The excellent results of the first technological calorimeter prototype are confirmed by new TB showing an excellent stability

→ Large prototype (with few layers) and un updated version of the electronic readout is being built to validate completely the SDHCAL option for ILD

→ SDHCAL software is rather in good shape but this is thanks to hard efforts made by the SDHCAL people. Realistic simulation is possible thanks to the exploitation of technological prototype.

→ More collaboration within ILD is a compulsory to be able to achieve full optimisation of the different technological options.

→ PFA codes (PANDORA, ARBOR,…) should be discussed within a working group of ILD. The work has started but needs to be fully supported by the ILD collaboration

Some relevant simulation results for SDHCAL

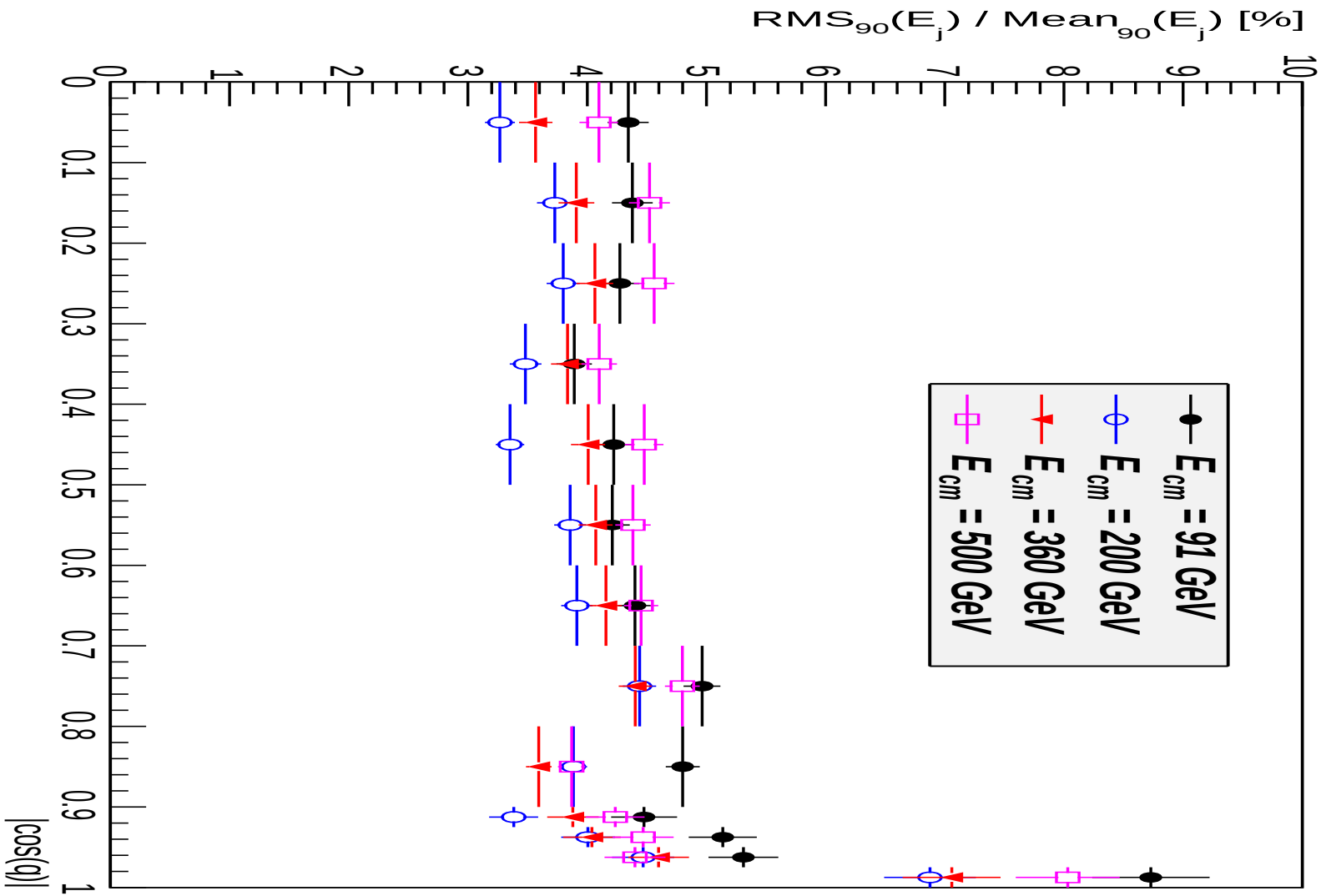

$RMS_{90}(E_j)$ / $Mean_{90}(E_j)$ vs |cos(q)|

No-optimized Pandora

K0_Long

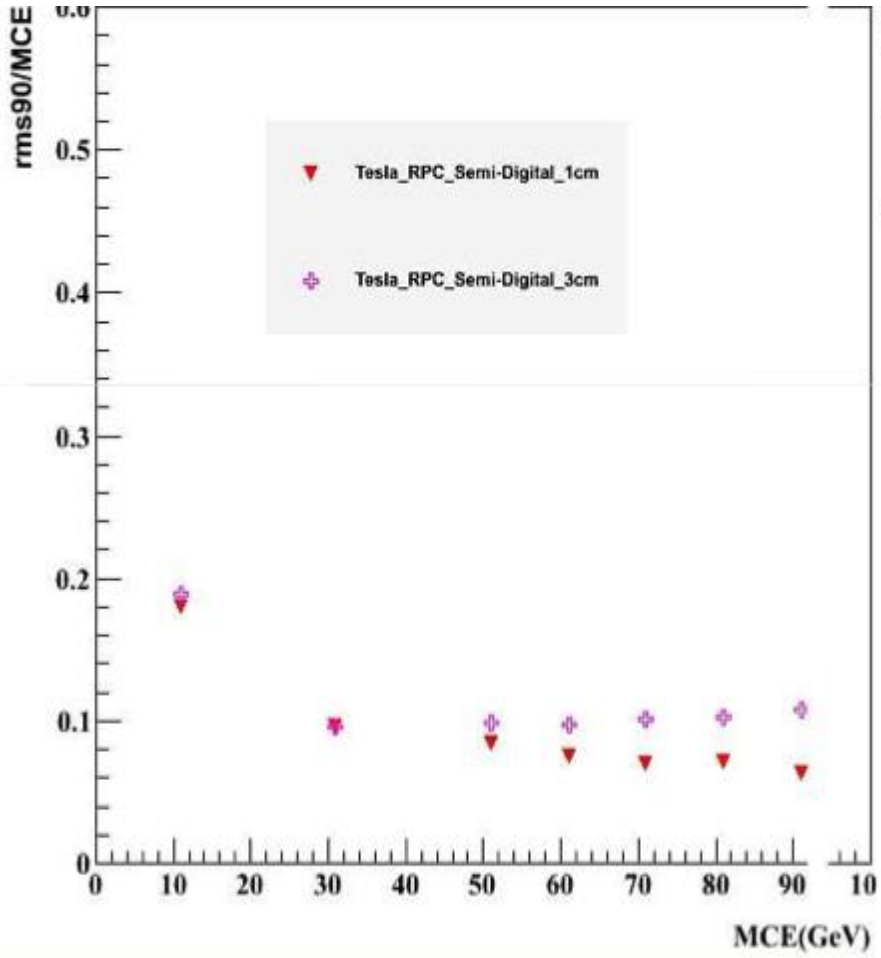

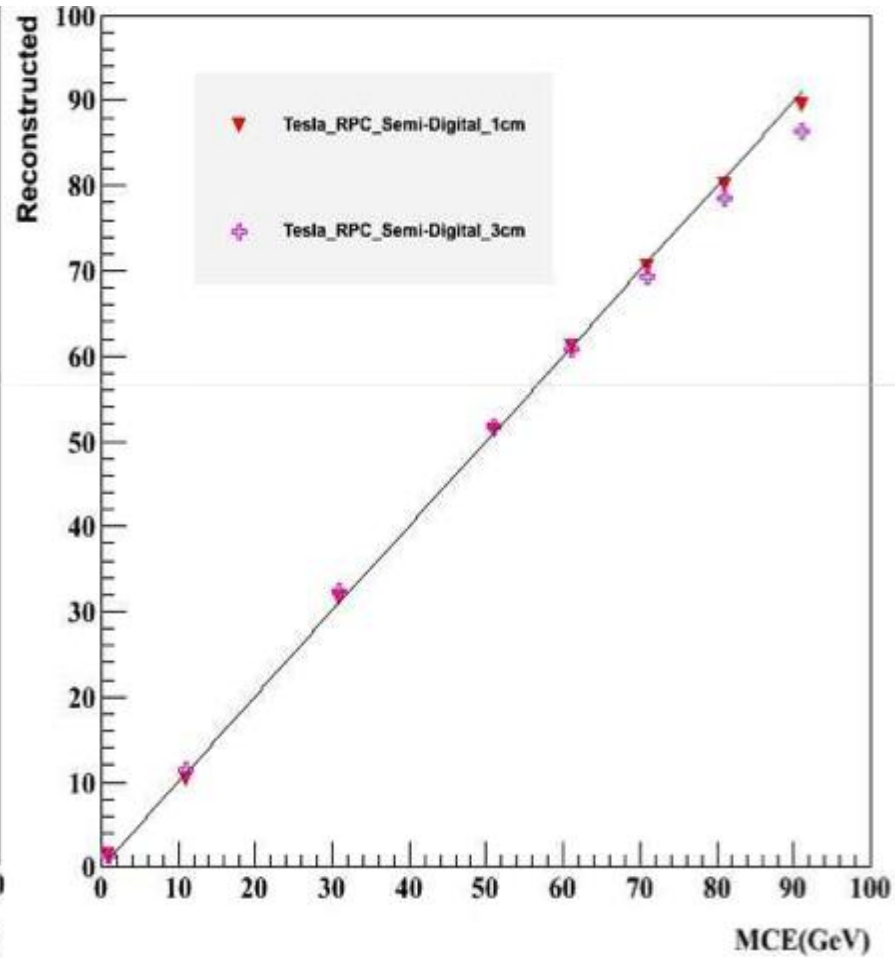

1x1 cm^2 vs 3x3 cm^2 granularity

K0_Long

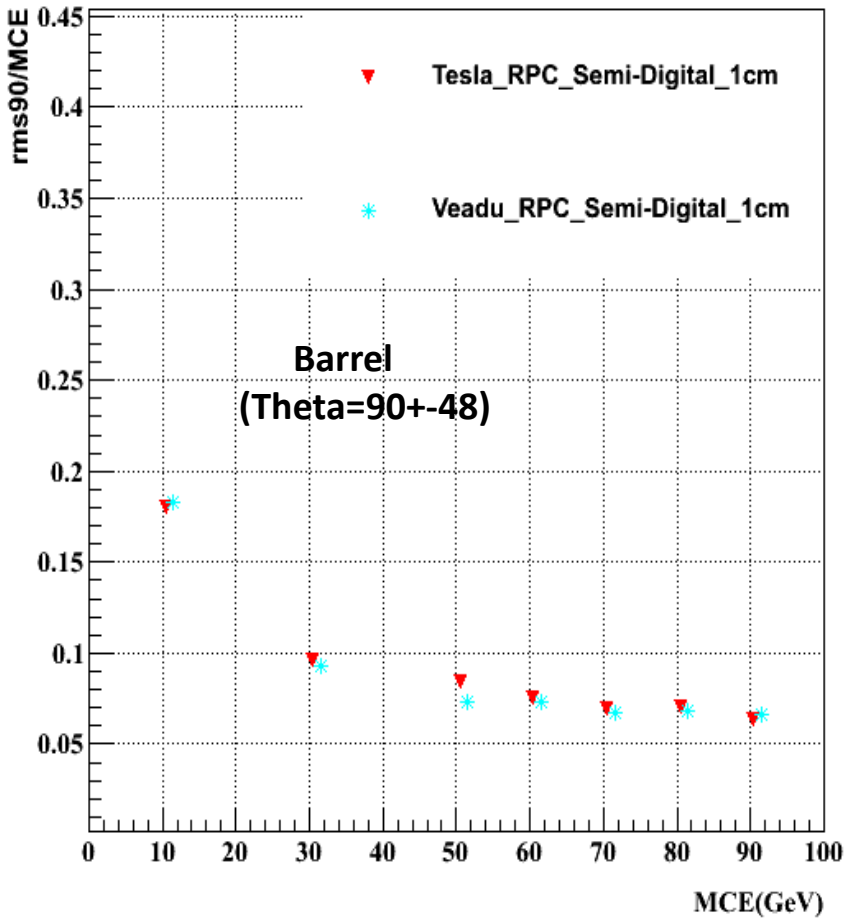

Tesla vs Videau model

K0_Long

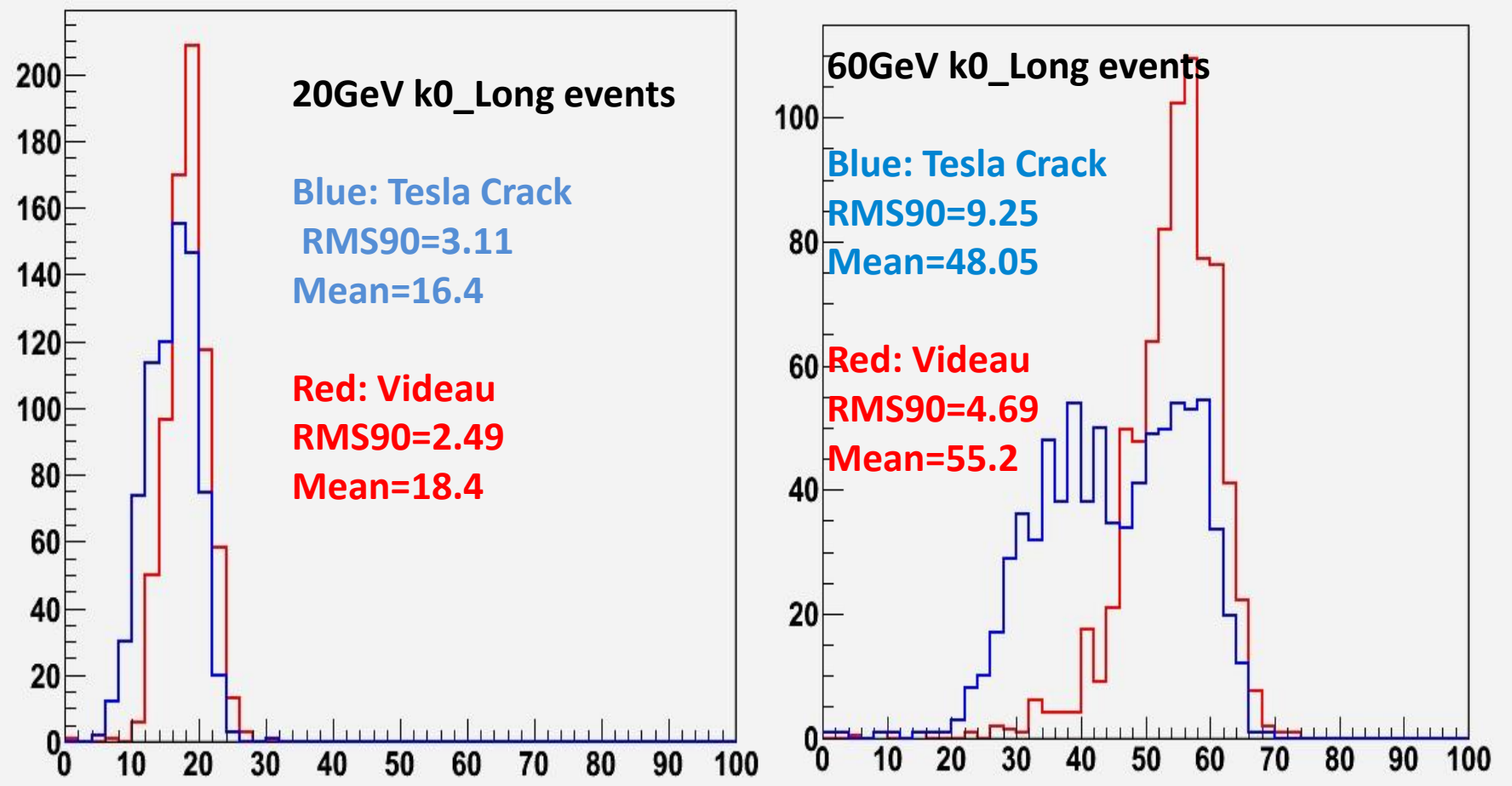

Tesla vs Videau model

Tomohiko Tanabe