Course C: XFEL rf technology

Part 2: rf-to-Beam coupling and wakefields

Walter Wuensch, CERN
Ninth International Accelerator School for Linear Colliders
Whistler, British Columbia, Canada
26 October to 6 November 2015

We have looked rf structures in order to understand how to get an interaction between an rf field and a relativistic beam – the issues were mainly getting synchronism and getting the electric field to point in the right direction.

Now we are going to look at the terminology and formalism to describe how much acceleration the beam actually gets.

We are going to study how much energy you transfer to the beam from a certain stored energy in a standing wave cavity or power flow in a travelling wave cavity.

We approach this in steps.

- First look at a dc gap,
- then an rf gap

At this moment we will really focus on understanding the energy/power balance.

Then we will look at how travelling wave structures are dealt with.

The basics

Acceleration is typically measured in units of MV/m, ILC around 30 MV/m and CLIC 100 MV/m.

We are looking for the answers to precise questions like:

- How much energy gain will I get from a particular structure if I put in 45 MW?
- What fraction of my input power will go into accelerating a 1 amp beam? What happens if I increase the current to 2 amps?

We will develop quantities which variously relate

- voltage seen by the beam
- gradient
- energy of the rf fields
- power of the rf fields
- power of the beam

We will of course tend to focus on the electric field since we are talking about accelerating electric charges!

Let's look together for a moment at a simple capacitor plate (big enough one so we don't have to worry about edge effects) to make sure we are familiar with all the relevant quantities in a simple case.

d [m] gap size, *A* [m^2]area

Electric field:

$$E = \frac{P}{d}\left[\frac{\mathrm{V}}{\mathrm{m}}\right]$$

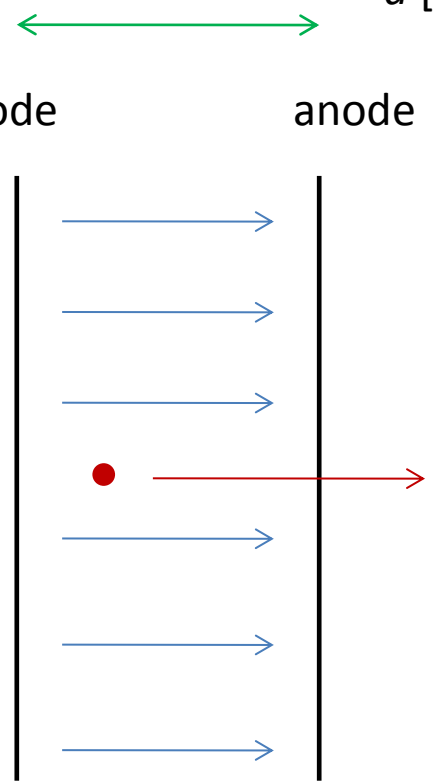

Energy gained by bunch:

$$U = P[\mathrm{V}]q[\mathrm{C}] = Pq[\mathrm{J}]$$

Stored energy in electric field:

$$W = \int \frac{1}{2}\varepsilon_0 E^2 dV$$

Now an rf 'cavity' (without being specific about the details of what it is):

The 'voltage' of an rf gap is of course more complicated because the fields are oscillating while the beam takes the time to cross the gap. Remember the definition of the transit time factor from section 1:

$$A = \frac{|V_{acc}|}{\int E_z dz} = \frac{\int E(z)dz}{\int E_z dz}$$

We will use the numerator again, which is the *effective* gap voltage:

$$|V_{acc}| = \int E(z)dz$$

The magnitude is the highest acceleration you get from the cavity.

remember this is a complex number

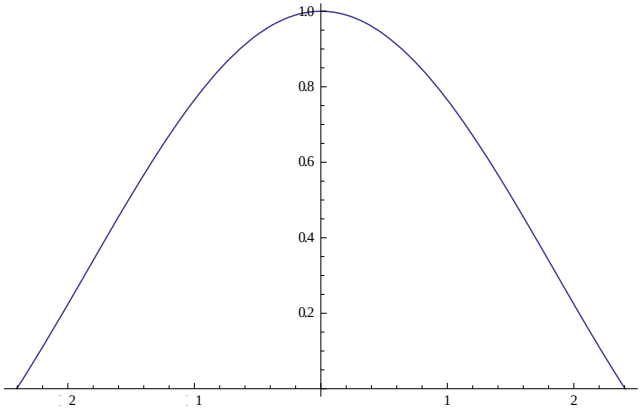

TM_{010} mode

For the stored energy in a cavity we need to include both the electric and magnetic field:

$$W = \int \frac{1}{2}\left(\varepsilon_0 E^2 + \frac{1}{\mu_0} B^2 \right) dV$$

Putting the two terms we can define:

$$\frac{R}{Q} = \frac{\left|V_{acc}\right|^2}{\omega W}$$ Which has units of Ω.

R/*Q* – relates the amount of acceleration (squared) you get for a given amount of stored energy. If the electric fields are concentrated along the central axis of a cavity this term is large. You can use computer programs to get actual values.

The numerator and denominator both scale with field squared, so it is independent of field level. It turns out that this term is independent of frequency as well for scaled geometries.

You can do lots of useful calculations knowing this term. But let's dig deeper.

Going a step further

Our goal now is to derive and understand the loss factor, *k*.

Accelerating a beam *extracts* energy from a cavity (and by the way that's what we need to do to get high rf to beam efficiency).

The beam gains energy when you accelerate so the rf fields must loose energy.

We'll attack this by considering the question "How much energy does a traversing beam leave behind in a particular mode of an empty cavity?" and then superimpose the solution on a filled cavity, which is how we normally think of acceleration.

Concepts we will use

In this section we will often consider the driven rf fields (driven by a klystron or whatever), consider the fields the beam leaves behind and add the two together to get our final answer – **superposition** of *beam and rf fields*.

There is another subtlety we will use which is that you can break the problem up mode by mode, add them up and get the right answer. Another way of saying this is that all the eigenmodes of the cavity are orthogonal basis functions for all the possible fields in the cavity. You can expand reality as a **Fourier series** over all the *cavity modes*.

We will also consider **driving bunches**, these are the real bunches of the problem with finite amount of charge, and **witness charges**. Witness charges are basically just integrals over fields but it is useful to think of charges which follow the main one but have almost no charge so don't affect the fields themselves.

A charge passing through a cavity leaves behind it the cavity with voltage in it, and hence filled with energy. The beam loses the same amount of energy. The loses energy through interacting with an electric field, which in fact comes from itself.

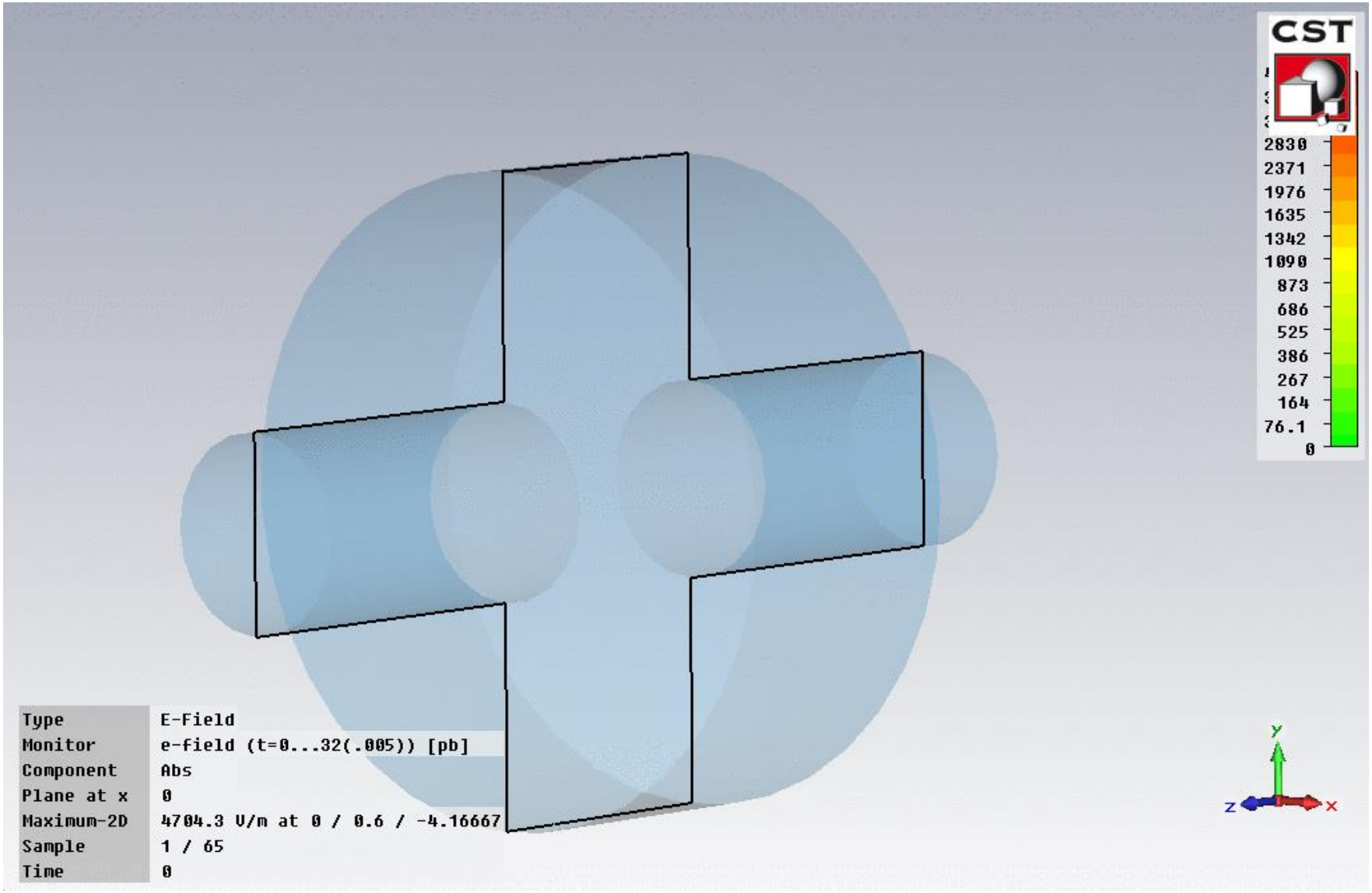

Something to think about:

The charge interacting with the fields it makes itself is in direct analogy to the radiated electric field produced by a current that you see when discussing the retarded potential in free space. For a current in the y direction,

$$E_y(t) = -\frac{J\left(t - y/c\right)}{2\varepsilon_0}$$

You normally think of currents producing magnetic fields but of course to transfer energy to an electromagnetic field there has to be movement of an electrical charge in the direction of an electric field.

The fundamental theorem of beam loading

The fundamental theorem of beam loading says that the voltage seen by beam which has traversed a cavity is half the voltage it leaves behind, that is the one that a following witness bunch would see.

A non-rigorous way of seeing this, is that the cavity is empty when the beam enters and only full when it leaves – so on average it sees the cavity only half full (or half empty, like the proverbial glass!). A more rigorous understanding requires the formalism of longitudinal wakefields we will cover in section 4.

Is this easier to understand than the free-space case?

But in the mean time let's introduce a loss factor *k* which satisfies this factor of two. The voltage left is proportional to the charge so:

$$V_{seen} = kq$$

$$V_{left} = 2kq$$

The loss factor k

Let's now consider conservation of energy, what the bunch loses the cavity gains:

$$\Delta U_{beam} = V_{seen} q = kq^2$$

$$\Delta U_{left} = \Delta U_{beam}$$

$$\Delta U_{left} = kq^2$$

$$= \frac{V_{left}^2}{4k}$$

$$k = \frac{1}{4}\frac{V_{left}^2}{\Delta U_{left}} = \frac{\omega}{4}\frac{R}{Q}$$

$$V_{seen} = kq$$

$$V_{left} = 2kq$$

$$\frac{R}{Q} = \frac{|V_{acc}|^2}{\omega W}$$

Equations we will use

So the higher the *R*/*Q* the more field left behind in a mode by a given charge.

Now let's look at a cavity that already has fields in it

Everybody's first understanding is that the beam is just sees the accelerating fields that are there because we pump lots of microwaves into a cavity. But this is only true if the bunch charge is low, and we have negligible rf-to-beam efficiency.

In a linear collider we have rf-to-beam efficiency in the range of 30% to deal with the 10's of MW average power beams we need to accelerate.

So let's now look at a cavity with field in it that gives V_0 and currents which are leaving fields which are non-negligible.

The essential insight is that a passing bunch reduces the fields inside a filled cavity in exactly the same way as an empty cavity - superposition:

$$\Delta V = -2kq = -\frac{\omega}{2}\frac{R}{Q}q$$

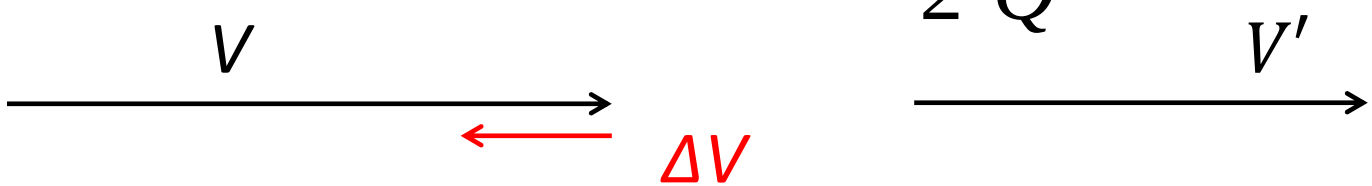

Checking consistency through energy balance

Beam

$$\Delta U_{beam} = V_{seen} q$$
$$= (V_0 - kq)q$$
$$= V_0 q - kq^2$$

Cavity

Before bunch passage

$$U = \frac{V_0^2}{4k}$$

After bunch passage

$$U' = \frac{(V_0 - 2kq)^2}{4k}$$

$$U - U' = \frac{1\left(V_0^2 - V_0^2 + 4V_0 kq - 4k^2 q^2\right)}{4k}$$
$$= V_0 q - kq^2$$

Consistent!

Tonight you will re-do this consistency check – but with arbitrary input phase!

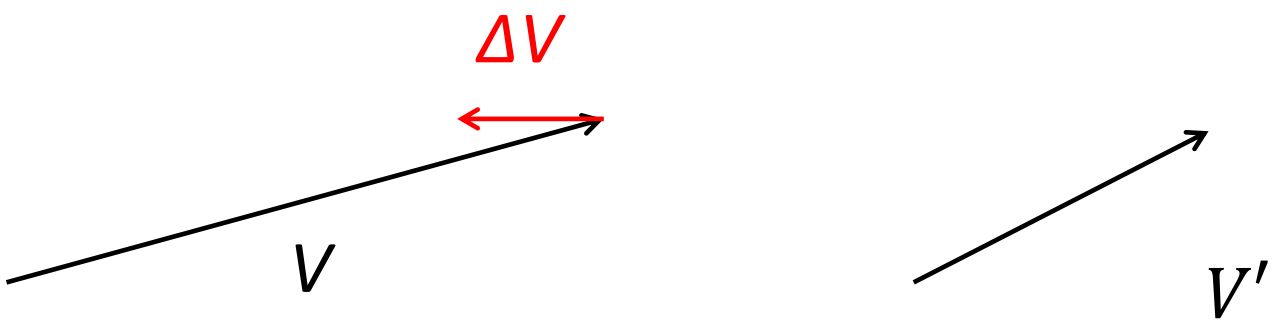

In a real cavity, we of course have the losses we saw in section 1. To deal with this we introduce the *shunt impedance*. We start with *R*/*Q,* which is independent of any losses,

$$\frac{R}{Q} = \frac{\left|V_{acc}\right|^2}{\omega W}$$

And take our definition of Q,

$$Q = \frac{\omega W}{P_{loss}}$$

To define the shunt impedance,

$$R = \frac{\left|V_{acc}\right|^2}{P_{loss}}$$

The units of *R* are again Ω, and a typical normal conducting cavity has an *R* in the range of M Ω. Note that both numerator and denominator scale with field squared. R is a measure of the acceleration to the losses and is often a quantity you optimize when designing an rf cavity.

Now travelling wave structures

We've just gone through an analysis where we have considered stored energy. This is straight forward to apply to standing wave structures

You will be doing some numerical examples in homework problems.

But the basic concepts remain the same for travelling wave structures. We have to extends things a bit and make sure we are accounting for all the energy going in and out of our problem.

Firstly we are going to consider a single cell of an infinitely long periodic structure which has been tuned to v_{phase}=c, i.e. a synchronous wave. This is quite reasonable since tuned cells are usually what we deal with.

The fact that the phase and beam velocities are the same gives us the periodicity to easily do all of our calculations on a single cell.

Single cell electric field pattern $2\pi/3$ phase advance

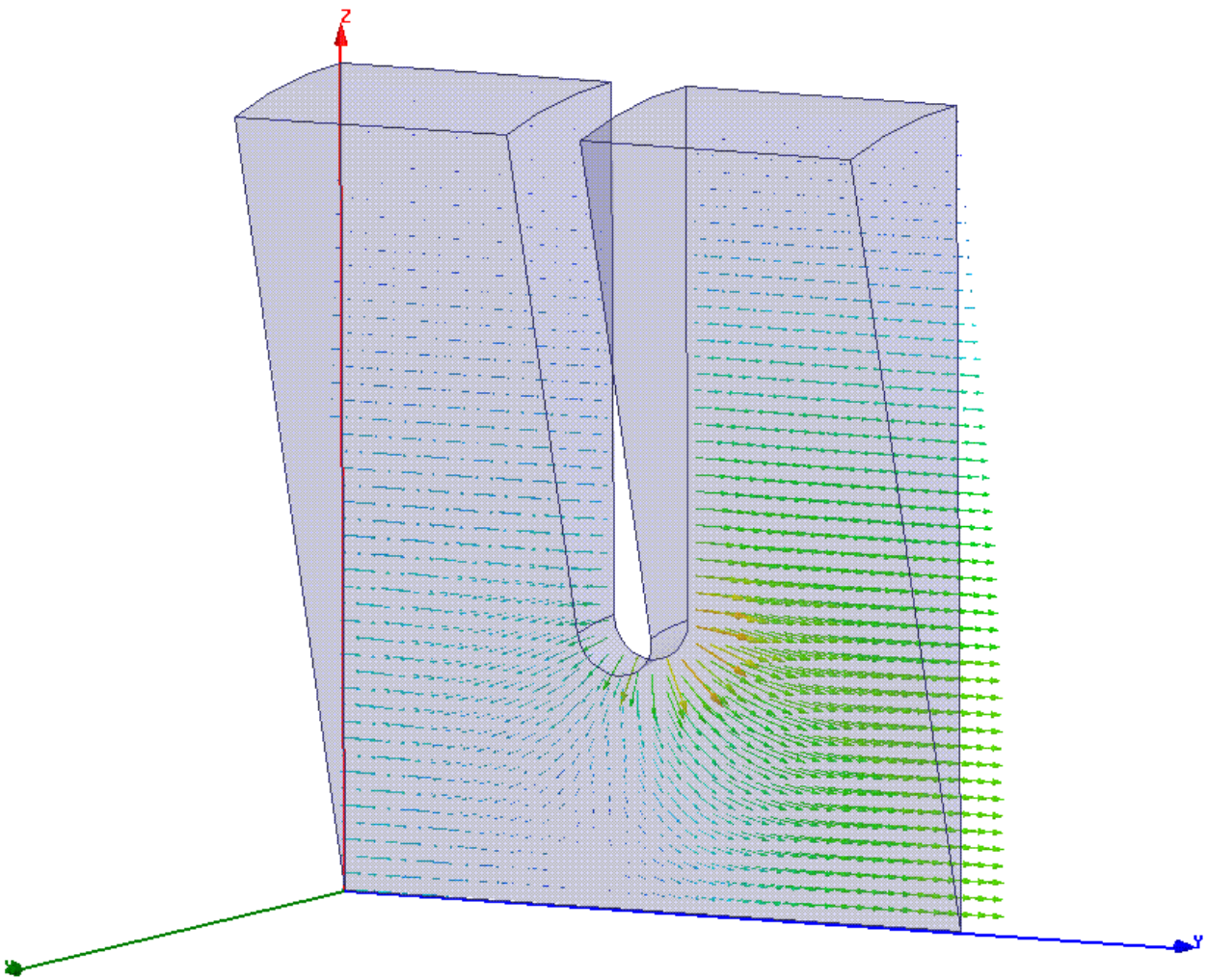

Single cell magnetic field pattern $2\pi/3$ phase advance

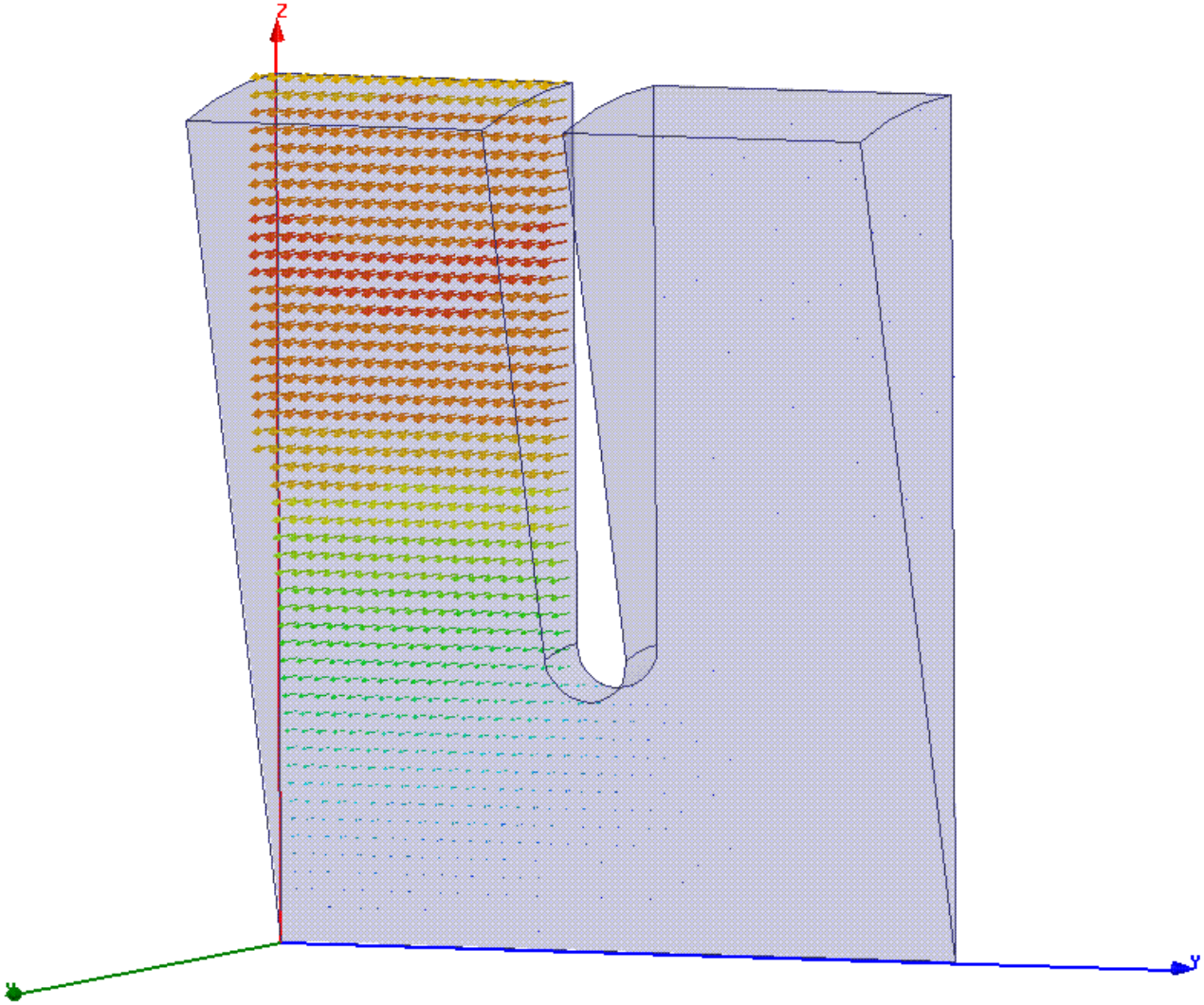

Standing to travelling wave

We will take over our definition of *R/Q* and shunt impedance and define it per cell, but then divide by the length of the cell, *l*, to get *R'/Q* and *R'* which are per unit length.

The other thing we will do is to put these quantities in terms of power flow rather than stored energy since this is the natural quantity for travelling wave structures.

The relationship between power flow and stored energy is,

$$P = v_g W$$

And we can get the relationship between accelerating gradient *G*, voltage per unit length (which is valid over one cell length), and power flow,

$$G = \sqrt{\omega \frac{1}{v_g} \frac{R'}{Q} P}$$

Power flow in disk loaded waveguide $2\pi/3$ phase advance

Real part of complex
Poynting vector

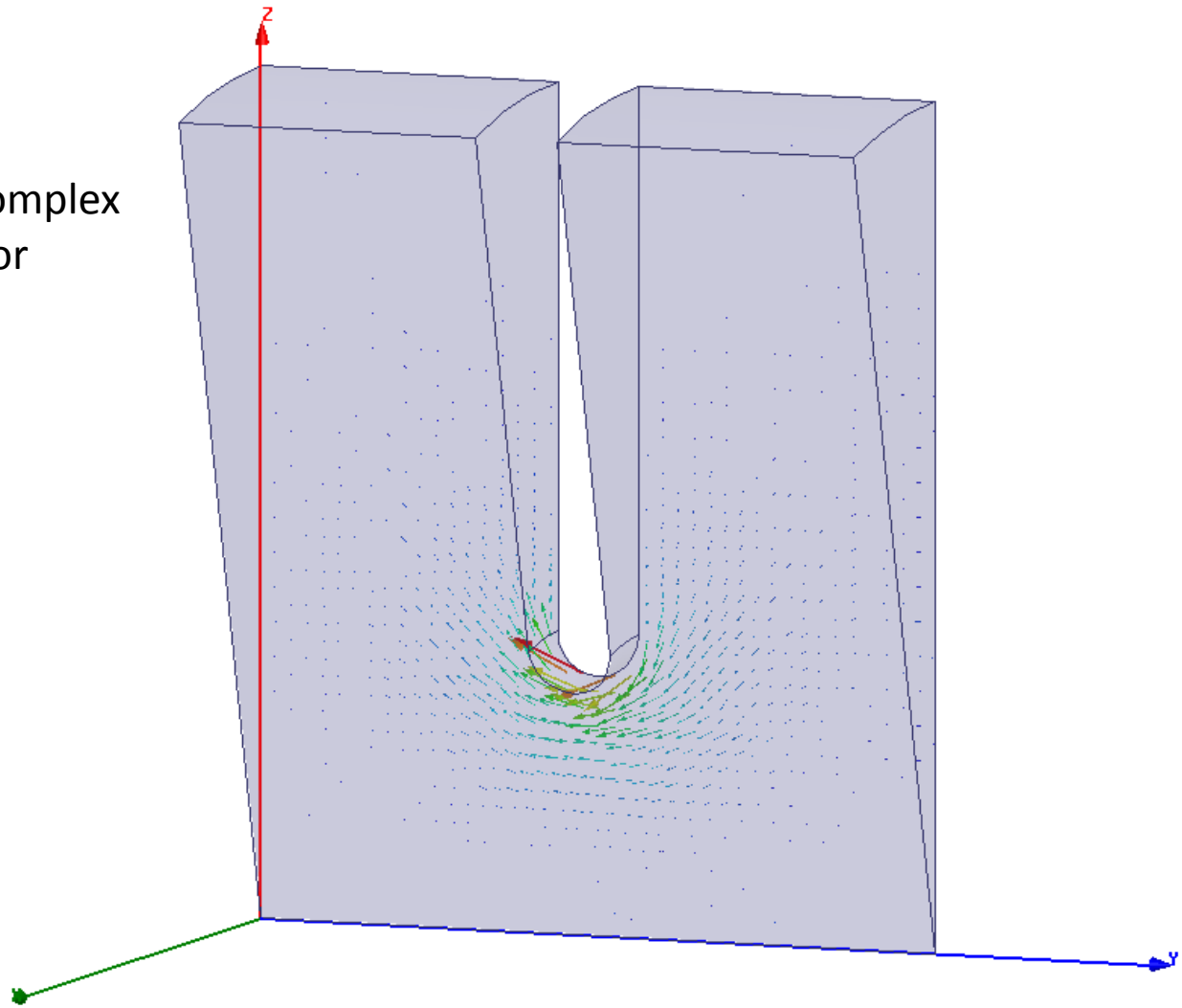

Let's set up a differential equation based on power conservation

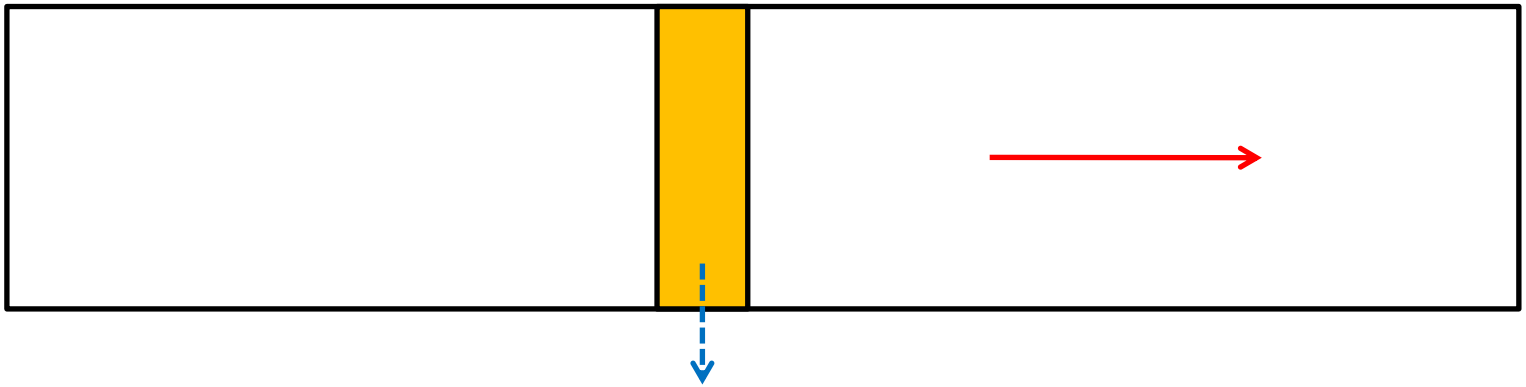

$$\frac{dP}{dz} = -P'_{wall}$$

$$\frac{dP}{dz} = -\frac{\omega}{Qv_g}P$$

Tonight, during the homework session, you will re-derive and/or re-express this differential equation in terms of gradient. Here again are the terms you will need:

$$\frac{dP}{dz} = -P'_{wall}$$

$P = v_g \dfrac{G^2}{\omega\, R'/Q}$ and $v_g = \dfrac{P}{W'}$ Power flow relations

$P'_{wall} = \dfrac{G^2}{R'}$ and $Q_0 = \dfrac{W'\omega}{P'}$ Wall losses

The general differential equation in terms of gradient

$$\frac{dG}{dz} = -\frac{G}{2}\left[\frac{1}{v_g}\frac{dv_g}{dz} + \frac{1}{Q}\frac{dQ}{dz} - \frac{1}{R'}\frac{dR'}{dz} + \frac{\omega}{v_g Q}\right] - \frac{IR'}{2}\frac{\omega}{v_g Q}$$

$$G(0) = \sqrt{\frac{P_{in}R'\omega}{v_g Q}}$$

Solutions in closed form

$$G(z) = G(0)\sqrt{\frac{v_g(0)}{v_g(z)}}\sqrt{\frac{Q\ (0)}{Q(z)}}\sqrt{\frac{R'(z)}{R'(0)}}\,e^{-\frac{1}{2}\int_0^z \frac{\omega}{Q(z)v_g(z)}dz}$$

$$G_{loaded}(z) = G(z)\left[1 - \int_0^z \frac{I}{G(z)}\frac{\omega R'(z)}{Q(z)v_g(z)}dz\right]$$

A. Lunin, V. Yakovlev, A. Grudiev PRSTAB, 14, 052001 (2011)

Wakefields

We will now discuss how charges, which travel through rf structures (and beam pipes with features) , leave behind fields and how these fields act on following charges.

In the previous section we restricted ourselves only to the interaction between a current and a single (the main one) mode of an rf structure. We focused on *acceleration*.

Now we will consider the interaction with many modes, in particular on transverse ones. We address for the purposes of studying *beam stability*. A beam picks up energy spread and transverse kicks from wakefields.

Basic assumptions

In this section we are going to consider only highly relativistic driving and following bunches:

- using the (really good) approximation that $v=c$
- that the beam trajectories through the structures we study are not affected by the fields, i.e. they follow straight unbendable lines
- we will calculate the momentum “kicks” the particles are subject to and pass them on to the beam dynamics gang. They will deal with the trajectories on bigger scales through particle tracking.

This is a very special case of moving charges, radiated fields along with conductors – luckily for us the charge movement is fixed before hand and we only need to understand the fields.

This is for example not the case in the injector where the beam is not relativistic yet. There you need to solve field and particle trajectories self consistently using PIC (Particle In Cell) codes.

Two kinds of wakefields

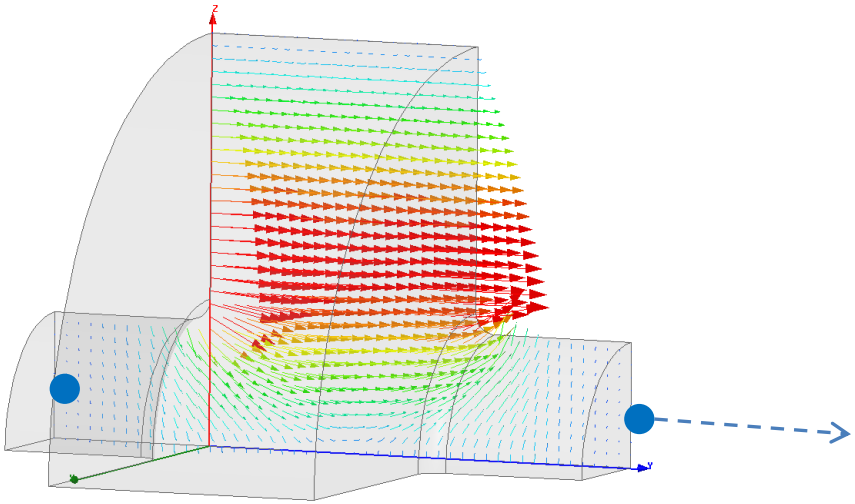

We consider a train of bunches. Here a bunch acts on following bunches. We call this effect the **long-range wakefield**.
We often analyze this case by considering the series of modes the driving beam excites in the cavity or DLWG.

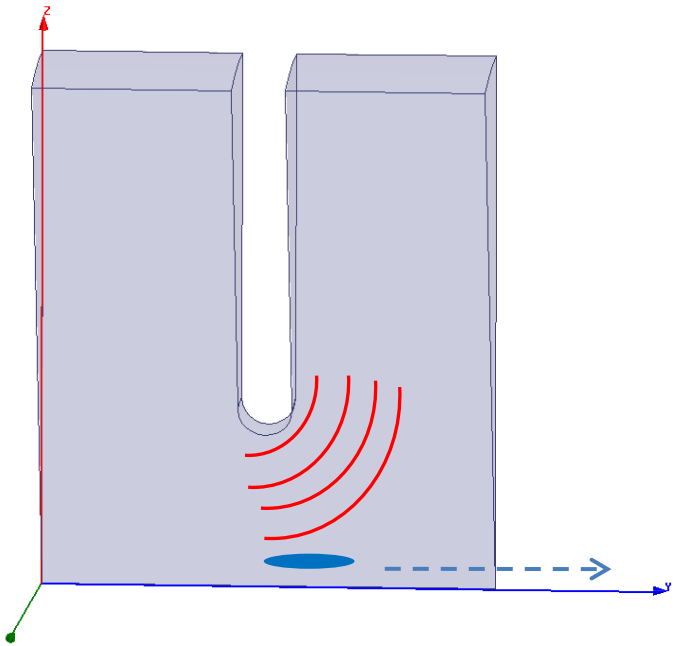

We consider a single bunch, and all real bunches have finite length. Here the head of the bunch acts on the tail of the bunch. We call this effect the **short-range wakefield**.
This one we analyze by considering the diffraction of the fields of the bunch from the discontinuities in the walls of our cavity or DLWG.

Another distinction among wakefields

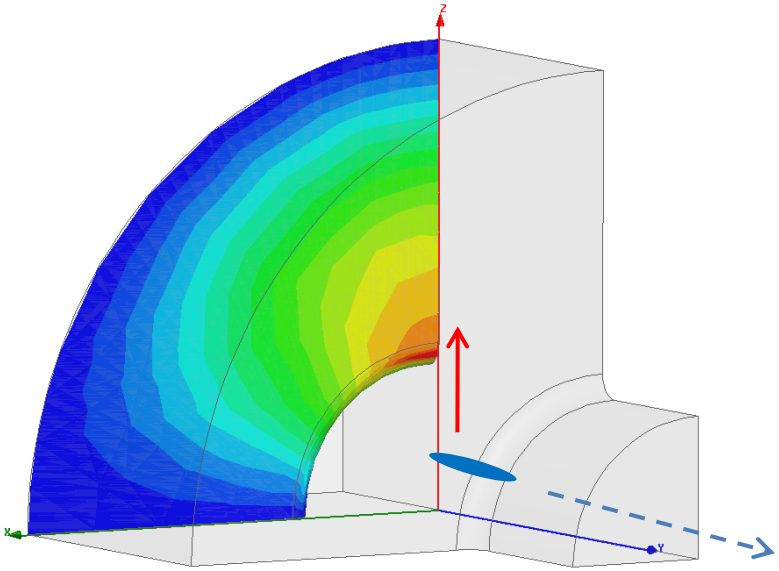

Transverse wakefields – a radially offset bunch (head) excites azimuthally varying modes which gives a transverse momentum to following bunches (tail).

The induced kick is represented by the red arrow.

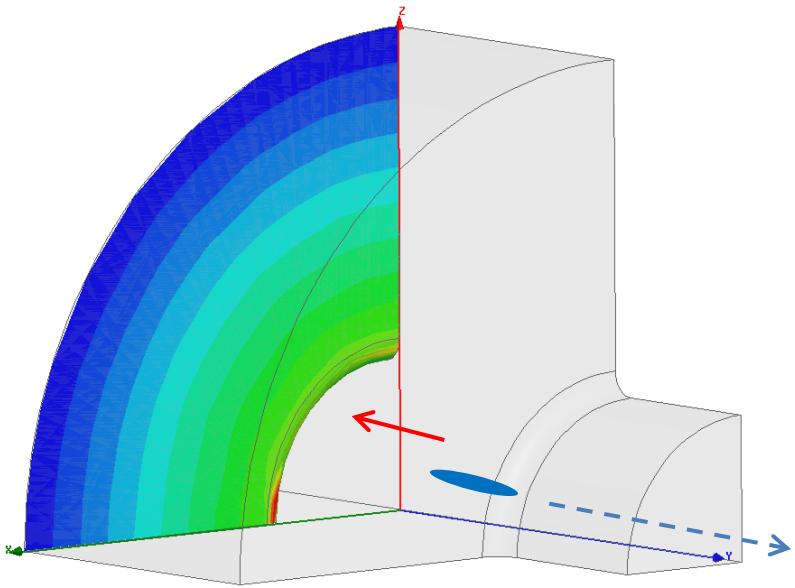

Longitudinal wakefields – a bunch (head) excites m=0 modes which gives an acceleration/deceleration momentum to following bunches (tail). We've already started working on this type of wakefield in section 2.

Actually solving something

These days there are a number of programs - GdfidL, Microwave Studio, ACE3P, HFSS - to get spectacularly accurate solutions for the wake potentials.

They operate mainly in time-domain, calculating fields step by step as the particle flies through the structure and doing for you the necessary integrals.

You can also use frequency domain codes to get detailed understanding of what's happening to individual modes and do design work. There is also a rich history of semi-analytic methods like circuit models and mode matching techniques.

Still it is important to be familiar with the underlying theory in order to understand the results and what the origin of different features are.

I won't be fully rigorous, there isn't nearly enough time, but I'll try to pick out the highlights of derivations and the characteristics for solutions for special cases.

In the next section we will study how to design a cavity to reduce wakefield effects.

We will now look at the ‘frequency spectrum’ of a finite length bunch.

Bunches in linear colliders are short – with a $\sigma \cong 50\ \mu m$ for CLIC

Radiation from bunches starts to be suppressed at frequencies where, roughly, the half wavelength is less than the bunch length.

This point is important since it puts an upper limit on the frequencies that we need to consider.

Let’s look at this question in a bit more detail.

The “pancake” field pattern of a relativistic point charge

$$\beta = \frac{v}{c}$$

$$\gamma = \frac{1}{\sqrt{1-\beta^2}}$$

$$E_r(z,r) = \frac{q\gamma r}{4\pi\varepsilon_0\left(z^2\gamma^2 + r^2\right)^{\frac{3}{2}}}$$

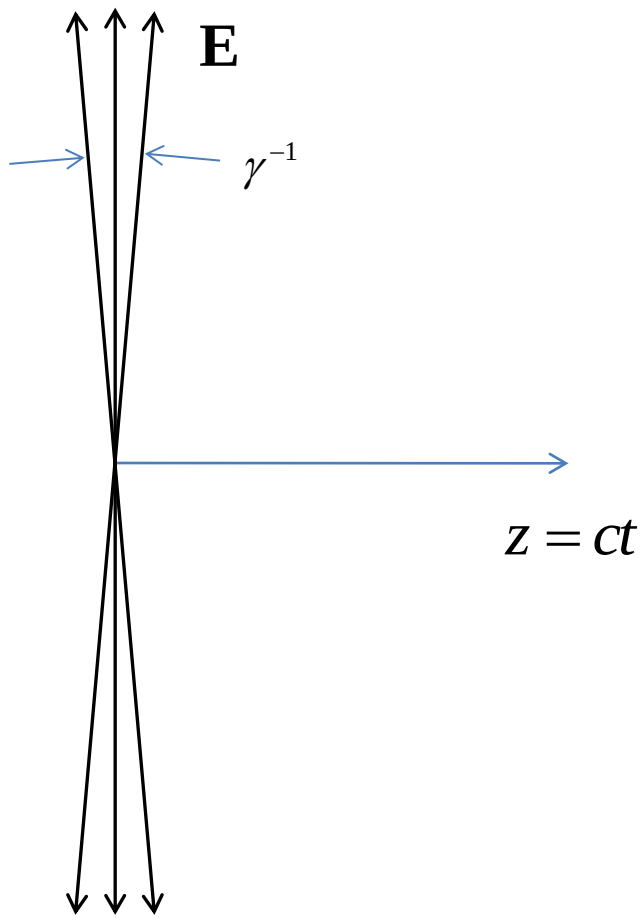

Example: 1 TeV charge at 3 mm radius has field region only 6 nm to be compared to CLIC bunch length of roughly 100 µm.

$$d = \frac{1TeV}{0.511MeV}3mm = 6nm$$

Points to emphasize

No fields before or after charge - we do not need to consider direct charge-to-charge forces.

We need our conducting boundaries to communicate to following charges.

And of course it's impossible to communicate forward, you'd have to go faster than the speed of light.

Because the 'opening angle' of the field of a relativistic beam is so narrow, our field pattern in free space exactly matches our bunch charge pattern for real linear collider type bunches.

Before we look at the excitations of modes, which have specific frequencies, let's get a feeling for the frequencies a typical linear collider bunch contains.

Frequency content of a Gaussian bunch

speed of light

Fourier transform

$$\rho(z) = e^{-\frac{z^2}{2\sigma^2}} \Rightarrow \rho(t) = e^{-\frac{(ct)^2}{2\sigma^2}} \Rightarrow A(f) = e^{-\frac{1}{2}\left(\frac{\sigma 2\pi}{c}\right)^2 f^2}$$

Blue dot is $f = \frac{c}{4\sigma}$

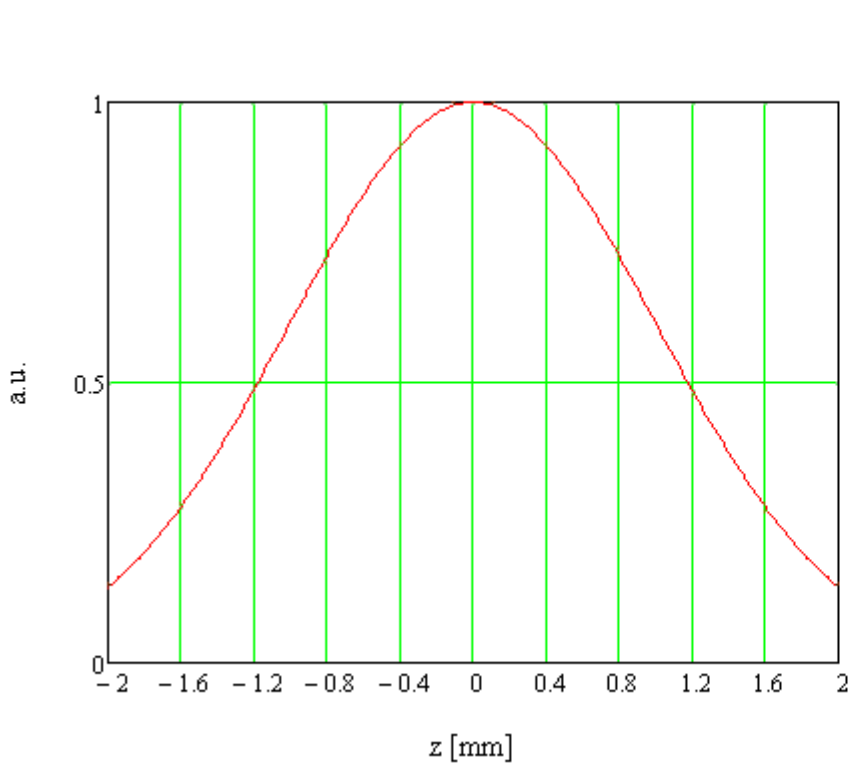

Charge distribution

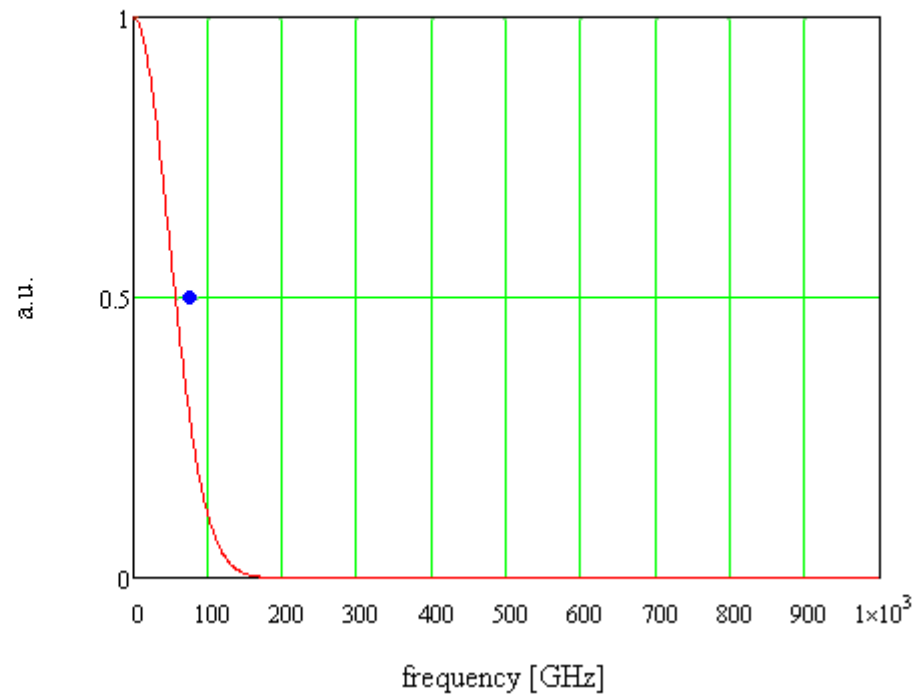

frequency distribution

The fields left behind a finite length bunch

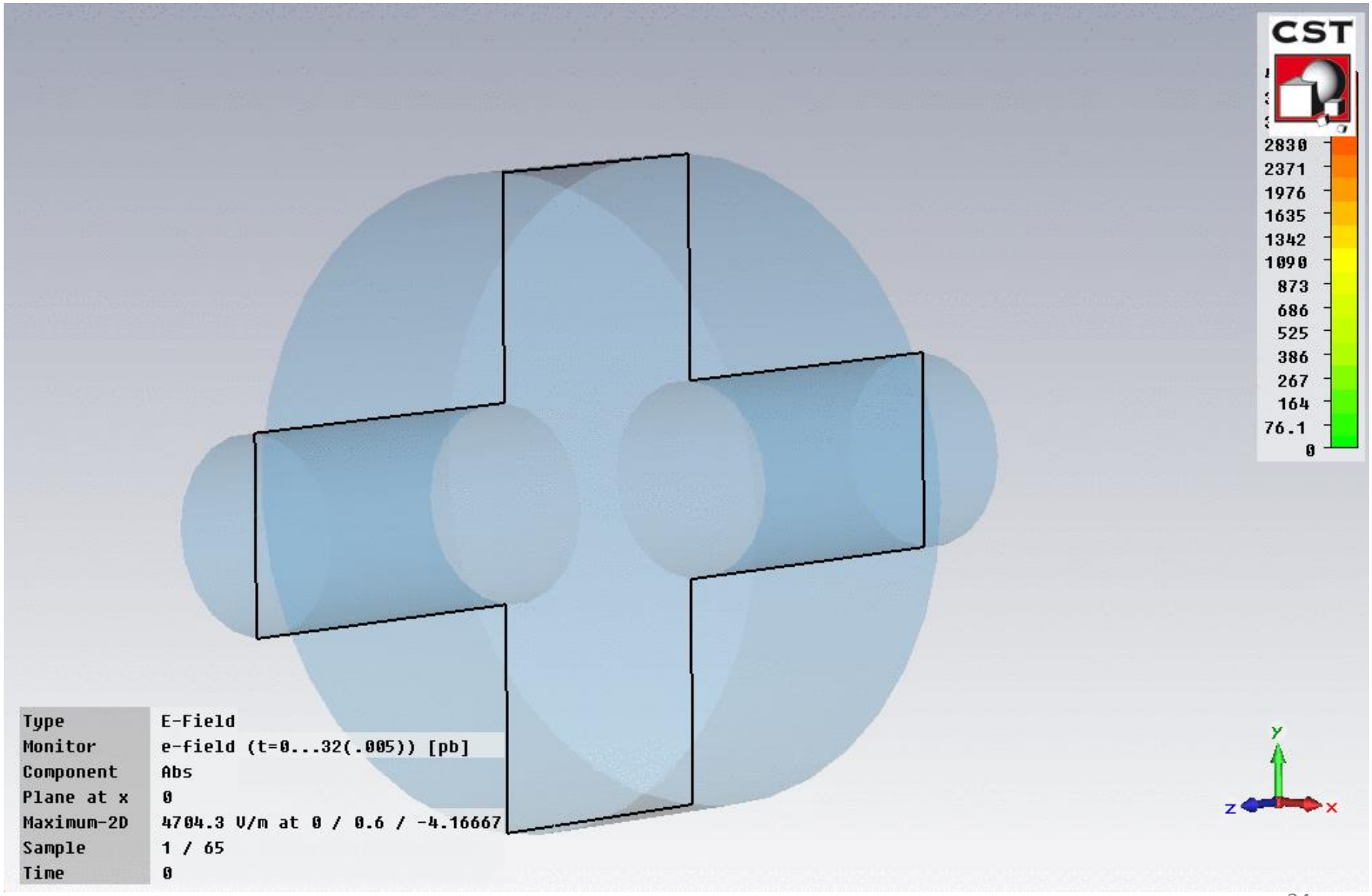

We are now going to introduce the idea of a **wake potential**.

This is the potential, measured in volts, a driving bunch leaves behind it, which is experienced by a witness charge.

In the standard formalism the bunches both travel at the speed of light, along straight lines parallel to the structure axis.

This is the information needed for beam dynamics simulations which calculate instabilities caused by charges acting on following charges.

The wake potential can be given for the whole of a finite length structure or per unit length for a infinitely long periodic structure.

Our coordinate system

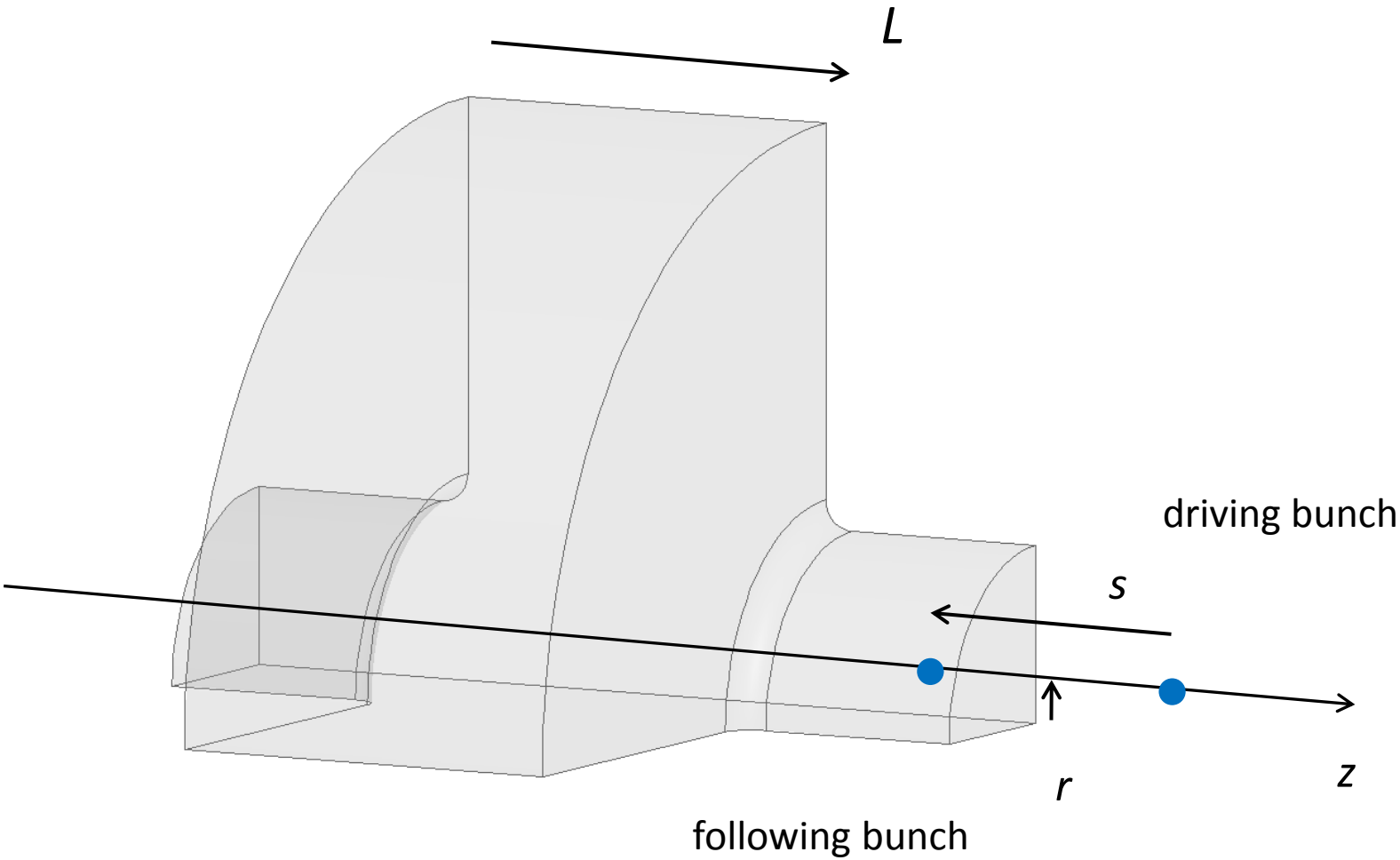

The *longitudinal* wake potential

This the total voltage that is lost (or gained) by a test charge following a driving charge q at distance *s.*

It induces an energy spread in the beam which causes emittance growth through effects like chromaticity.

The wake potential is given by the integral of the fields that are left behind by a very short driving bunch,

$$\mathrm{W}_z(s) = -\frac{1}{q}\int_0^L E_z\left(z,(z+s)/c\right)dz \qquad \left[\frac{V}{pC}\right]$$

distance time

As we have seen, high frequency part of the wake will depend on how long the bunch is. It is cut-off at half-wavelengths which correspond to the bunch length.

This comes out rigorously because the delta wake-potential on the previous slide can then be used as a Green's function to get the voltage loss/gain from a bunch of arbitrary shape by convoluting with the shape of the current,

$$W_z(s) = \int_0^\infty I(s - s') W_z(s') ds'$$

Now we will look at how you would approach calculating the longitudinal wake for a resonant cavity which has lots of modes, and then look at a numerical example.

Longitudinal wake by expanding the normal modes in a cavity

Reminder from section 2, the loss factor from a mode λ is,

$$k_\lambda = \frac{|V_\lambda|^2}{4U_\lambda}$$

The total acceleration left behind in the mode is (the bunch sees half its own field),

$$2k_\lambda$$

To get the total wake potential we sum over all the modes (that is really about all there is to it),

$$W_z(s) = \sum_\lambda 2k_\lambda \cos\left(\frac{\omega_\lambda s}{c}\right)$$

The terms of the longitudinal wake are cosine-like, which is reasonable, because the driving bunch itself loses energy.

Longitudinal wake potential from in a pillbox cavity

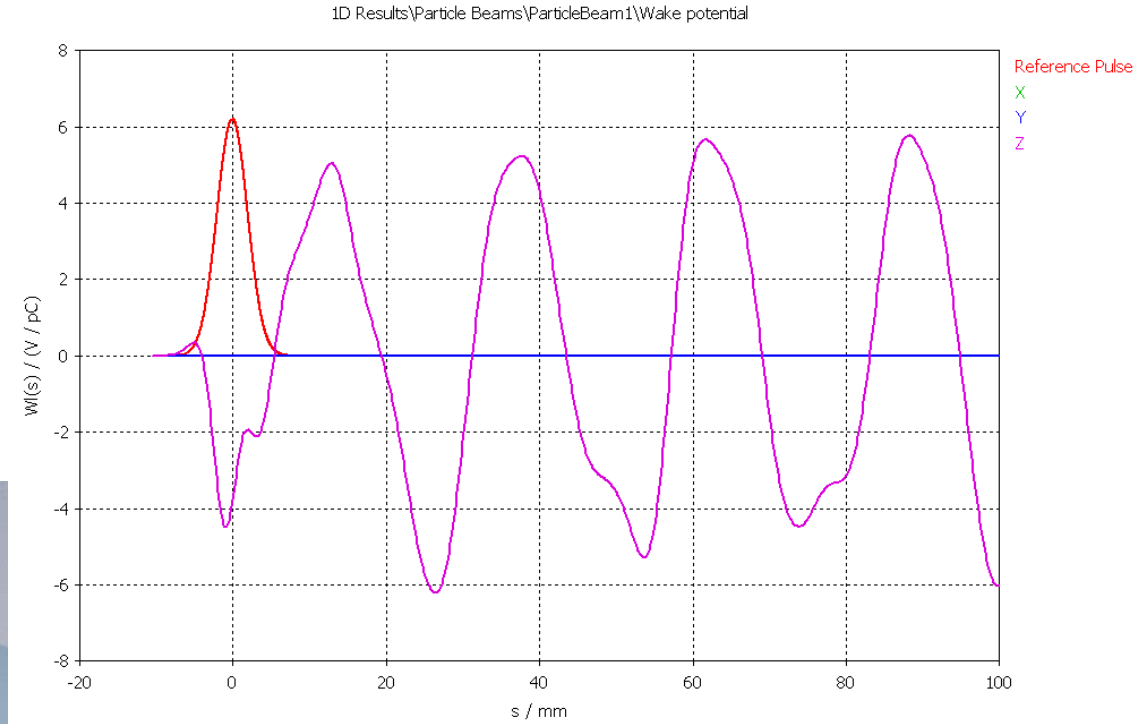

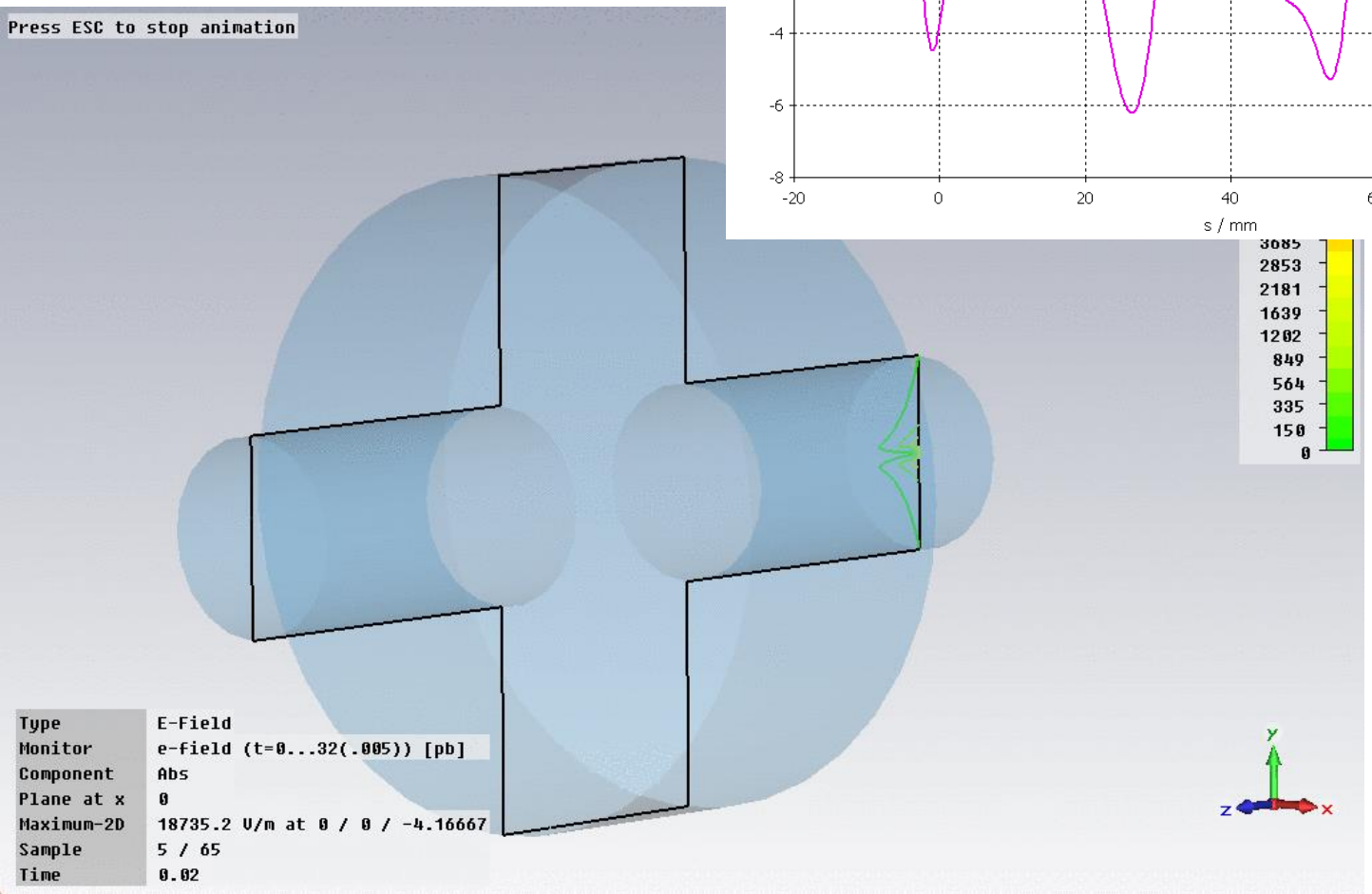

σ=2 mm bunch

Philosophy: Here we see better where the fundamental theorem of beam loading is coming from

Longitudinal wake

Cavity:

r=10 mm radius

d=2 mm thick

Beam pipe:

1 mm radius

Beam:

σ = 0.5 mm

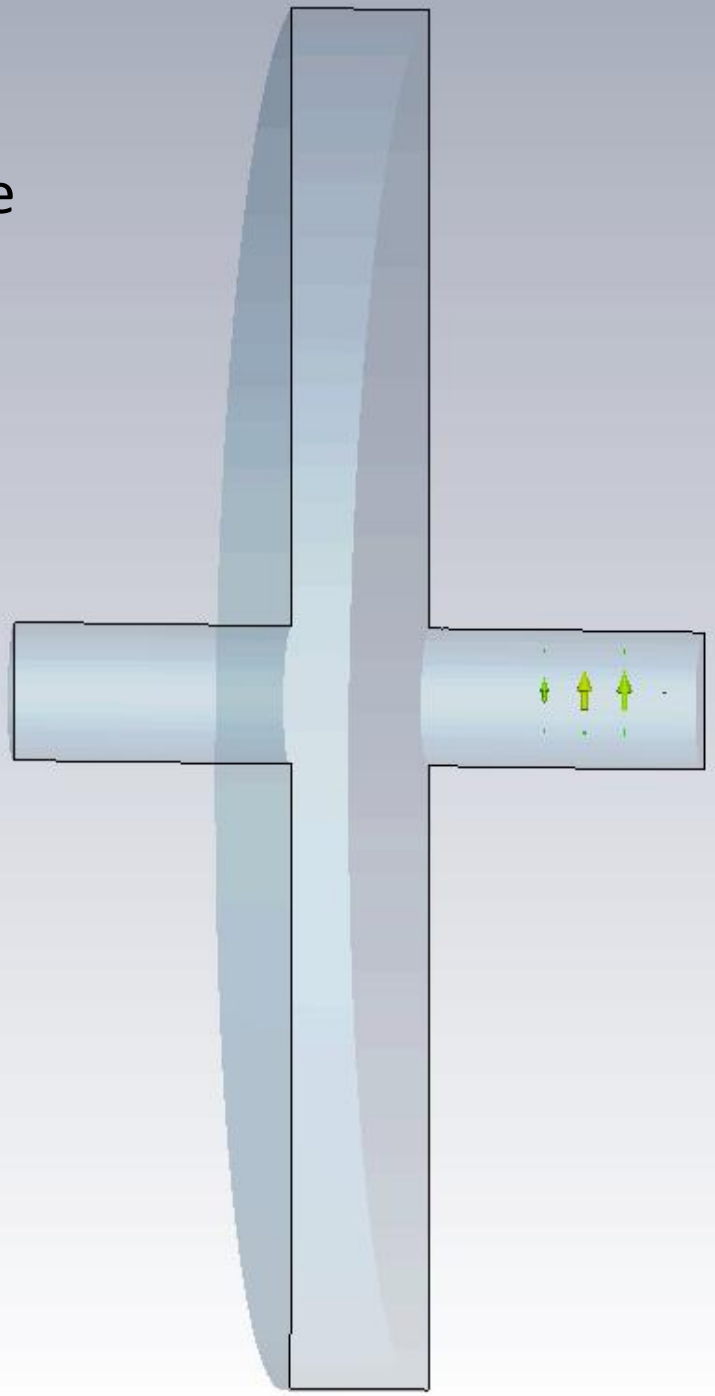

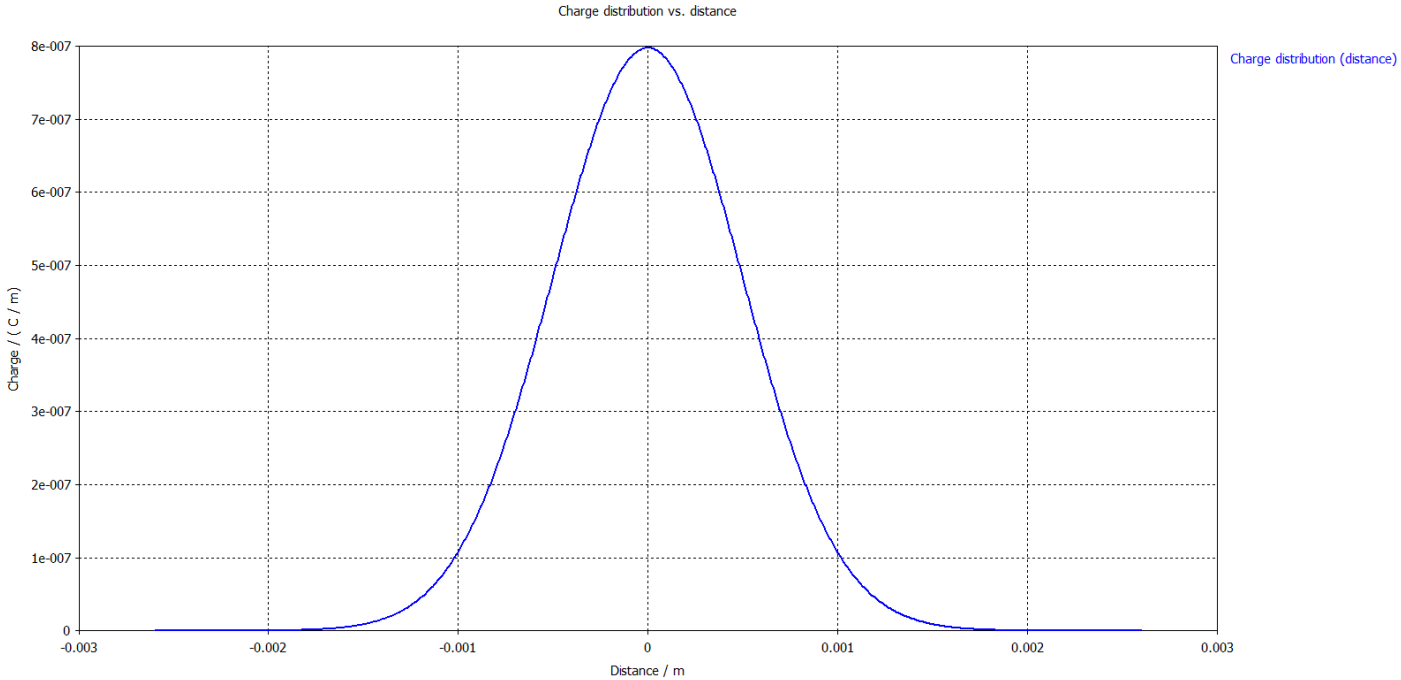
Charge distribution vs. distance
Charge distribution (distance)
Charge / (C / m)
8e-007
7e-007
6e-007
5e-007
4e-007
3e-007
2e-007
1e-007
0
-0.003
-0.002
-0.001
0
0.001
0.002
0.003
Distance / m

$= 0.5\ mm$

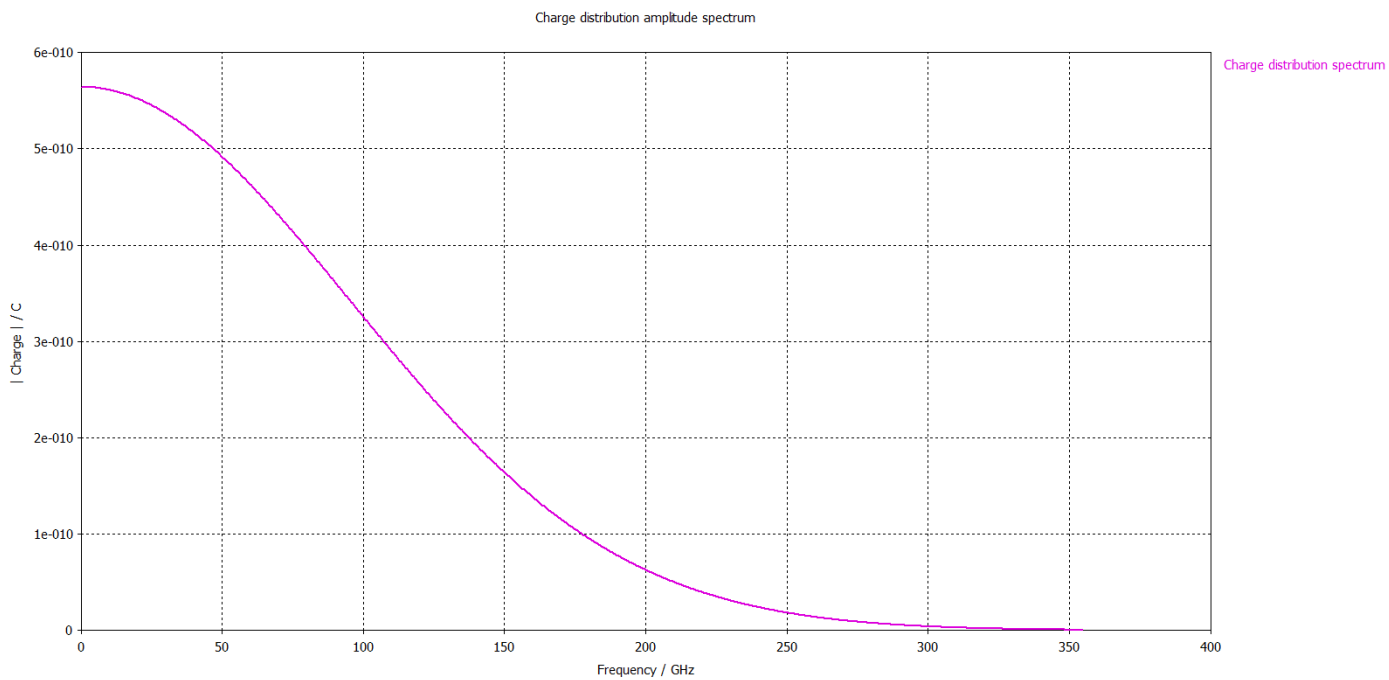
Charge distribution amplitude spectrum
Charge distribution spectrum
| Charge | / C
6e-010
5e-010
4e-010
3e-010
2e-010
1e-010
0
0
50
100
150
200
250
300
350
400
Frequency / GHz

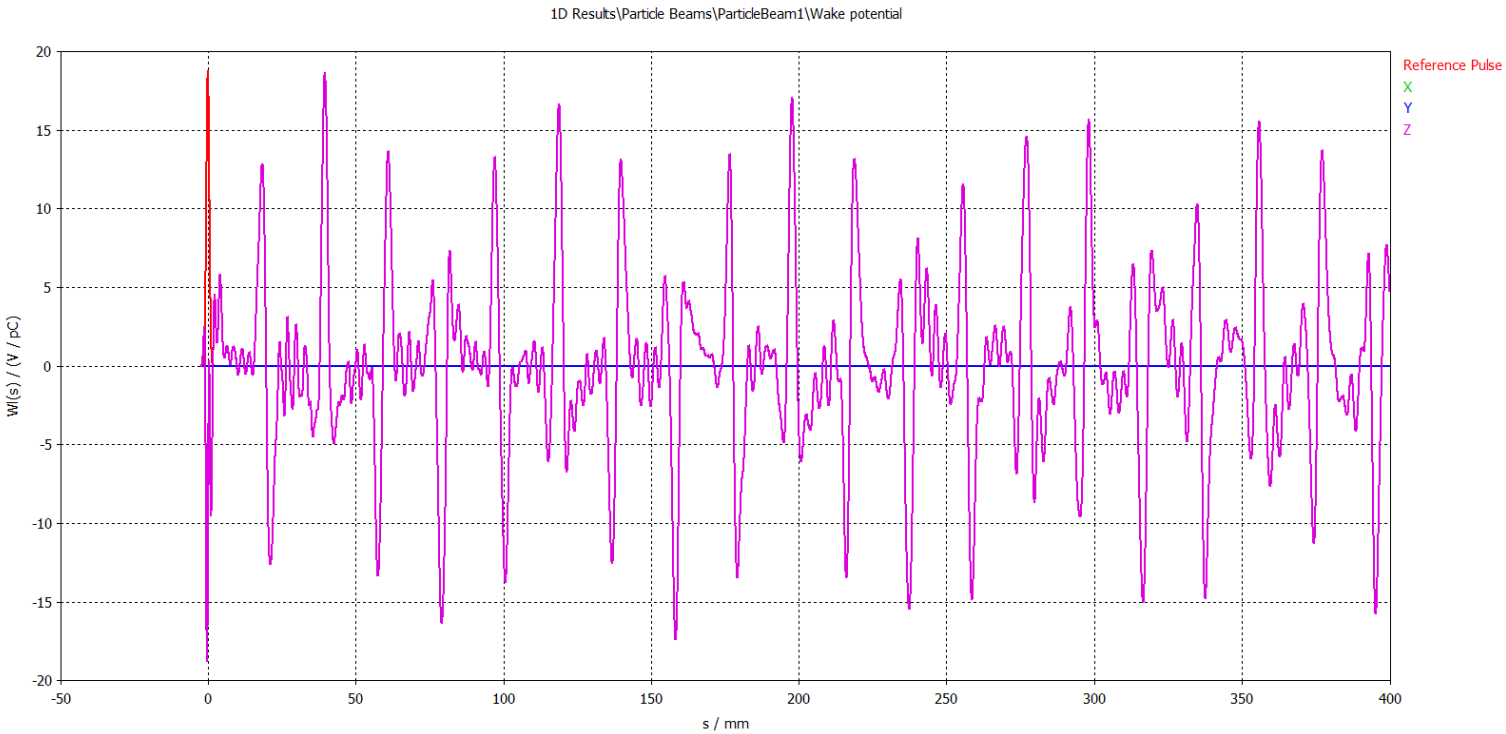
1D Results\Particle Beams\ParticleBeam1\Wake potential
Reference Pulse
X
Y
Z
Wl(s) / (V / pC)
s / mm
20
15
10
5
0
-5
-10
-15
-20
-50
0
50
100
150
200
250
300
350
400

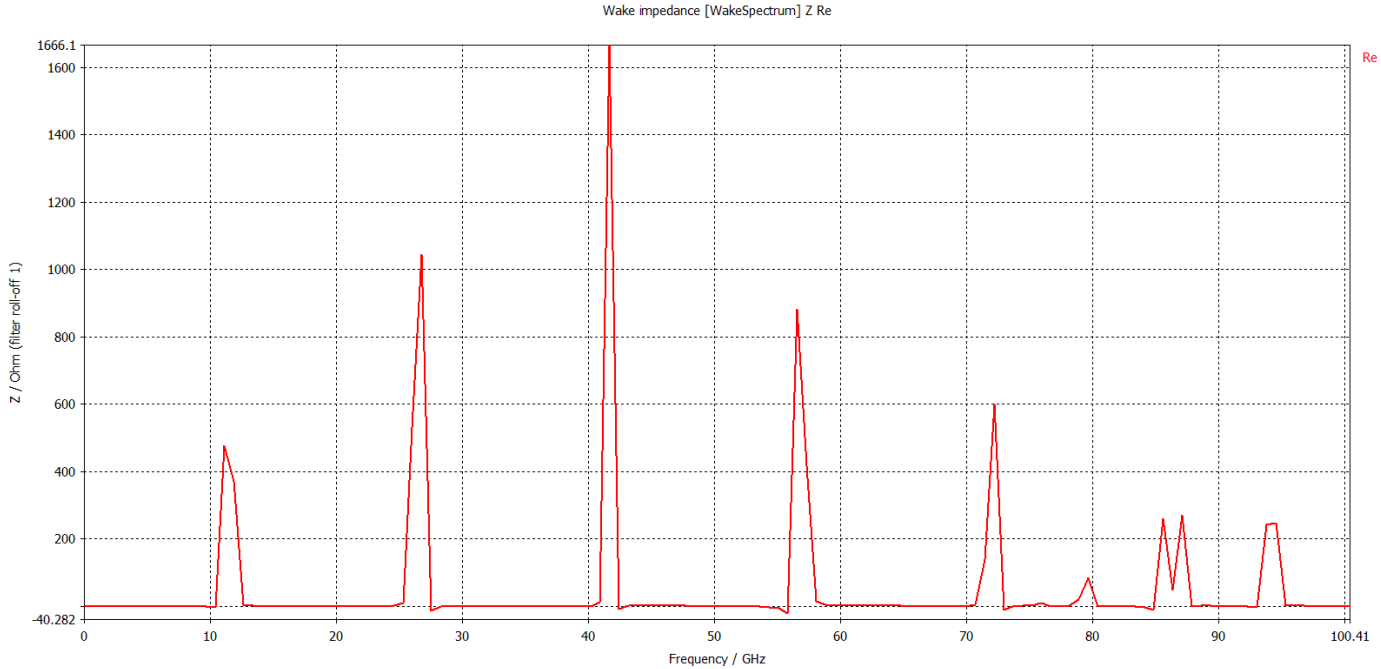
Wake impedance [WakeSpectrum] Z Re
Re
Z / Ohm (filter roll-off 1)
Frequency / GHz
1666.1
1600
1400
1200
1000
800
600
400
200
-40.282
0
10
20
30
40
50
60
70
80
90
100.41

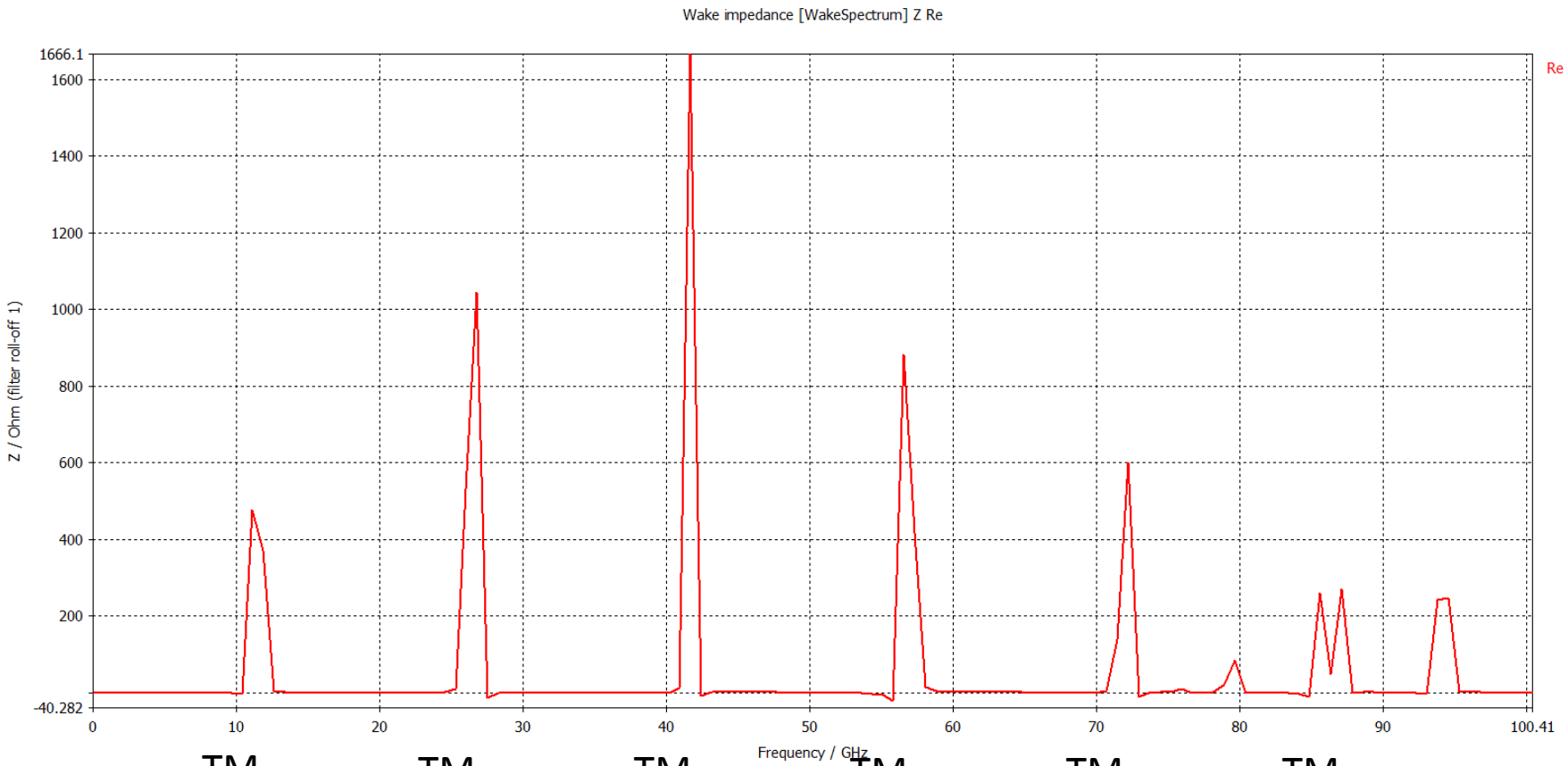

$TM_{0,1,0}$ $TM_{0,2,0}$ $TM_{0,3,0}$ $TM_{0,4,0}$ $TM_{0,5,0}$ $TM_{0,6,0}$ $TM_{0,4,1}$

$TM_{0,1,1}$ $TM_{0,3,1}$

$TM_{0,2,1}$

Pillbox cavity

$$f_{n,m,p} = \frac{c}{2\pi}\sqrt{\frac{x_{n,m}^2}{r^2} + \frac{p^2\pi^2}{d^2}}$$

Where for TM modes $x_{n,m}$ is the nth root of $J_m(r)$

r is the cell radius

d is the cell length

Now the *transverse* wake potential

It tells us how a transversely offset bunches gives a transverse kick to following charges.

BUT this one is significantly trickier. We have seen how fields are excited as a function of offset and now we need to understand how they kick following bunches.

We already have all the formalism to deal with the excitation of the bunch, the loss factor *k*:

$$k_\lambda = \frac{|V_\lambda|^2}{4U_\lambda}$$

We just need to do the integral along a path with the correct transverse offset. *k* goes to being $k(r,\theta)$.

The physics of how rf fields kick a particle is of course all completely contained in the Lorenz force,

$$\mathbf{F} = q\left(\mathbf{E} + \frac{\mathbf{v}}{c} \times \mathbf{B}\right)$$

But there is a simpler way of looking at the kick from rf cavities.
You can put in some properties which come from E and B being related through Maxwell's equations,
and that we are considering the special case that *v*=c,
and derive something called the **Panofsky-Wenzel theorem**.

The Panofsky-Wenzel Theorem

We don't have time to do the derivation, I will just state the result, and then we will look at the consequences of it in a couple of special cases.

The Panofsky-Wenzel theorem says that you can get the total transverse kick of an rf cavity by integrating the *radial* variation of the *longitudinal* acceleration,

$$p_{\perp} = \frac{-ie}{\omega_0} \int_0^L \nabla_{\perp} E_z dz$$

The Panofsky-Wenzel theorem relates the transverse wake to changes in the longitudinal one.

It also tends to be computationally simpler than calculating the forces directly and can be very, very useful in quickly settling arguments with your colleagues. You can easily see what the fields will do.

Let's look at some special cases to get a feeling for this equation.

A surprise - the $TE_{1,1,1}$ mode cannot kick the beam!

E fields on magnetic symmetry plane

H fields on electric symmetry plane

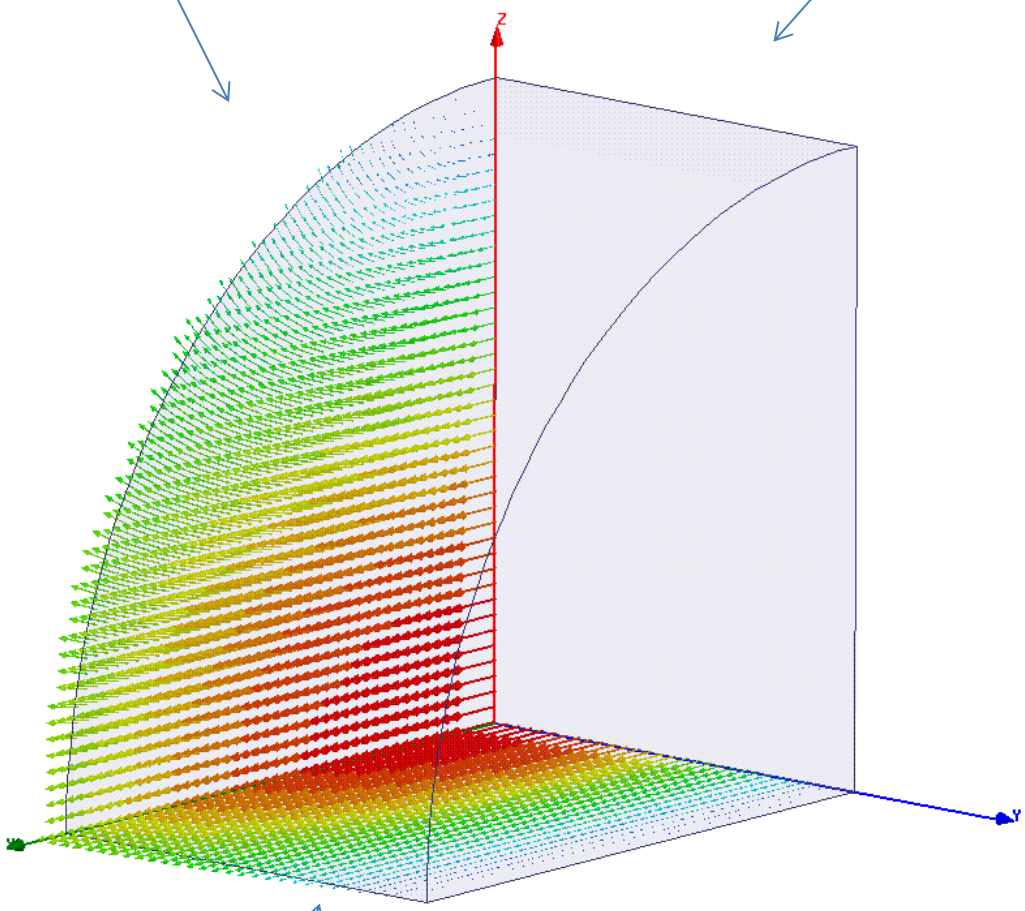

Because it has no longitudinal electric field so Panofsky-Wenzel says it won't!

But certainly the transverse electric field must kick the beam?

You can look at the problem more closely and in this specific case convince yourself the magnetic field magnetic field cancels the kick from the electric field.

But it's easier just to use the Panofsky-Wenzel theorem, no E_z so no variation in E_z so no kick!

E fields on magnetic symmetry plane

But the $TM_{1,1,0}$ mode does deflect

H fields on conducting end wall

E fields on magnetic symmetry plane

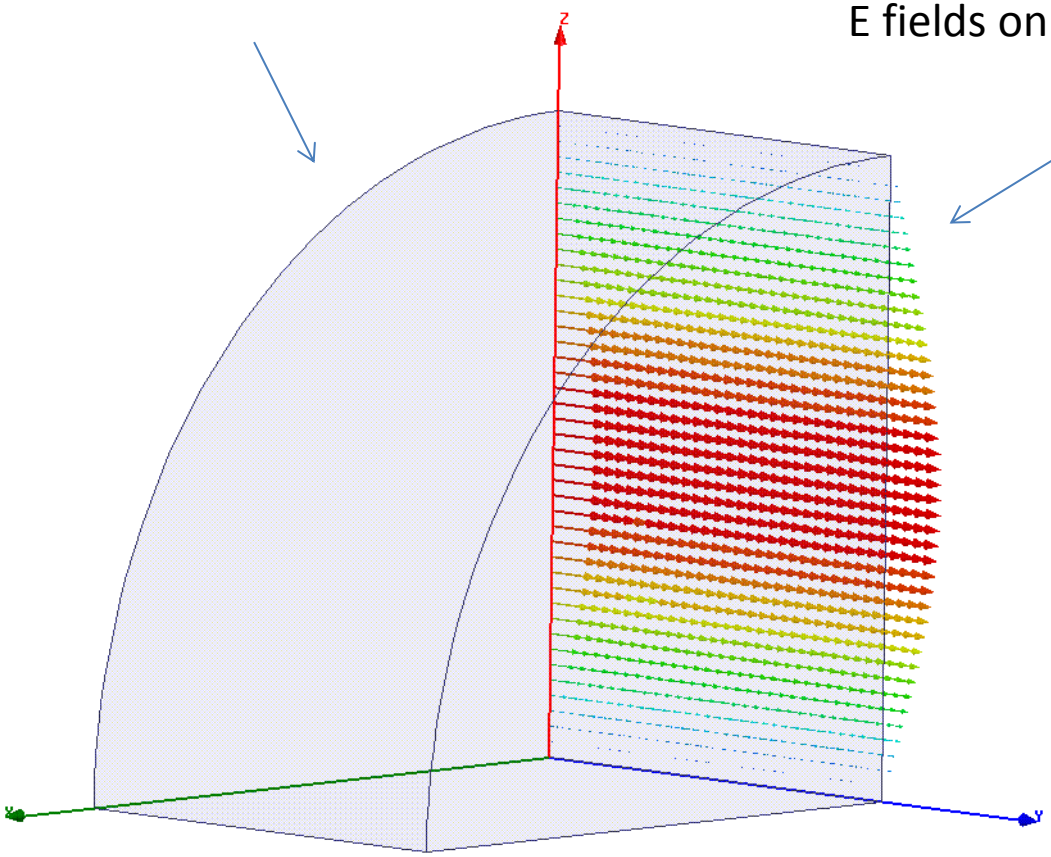

$$\nabla_{\perp} E_z$$

There's both E_z and a transverse gradient of it – hence the mode kicks the beam.

The excitation by the beam is proportional to E so increases 'linearly' with transverse offset.

This is the "cavity BPM" and "rf kicker" mode.

Now there's an amazing thing about beam apertures.

It's one of the rare occasions where a necessary, practical, feature (you've got to get the beam through the cavity) gives you a simplified behavior.

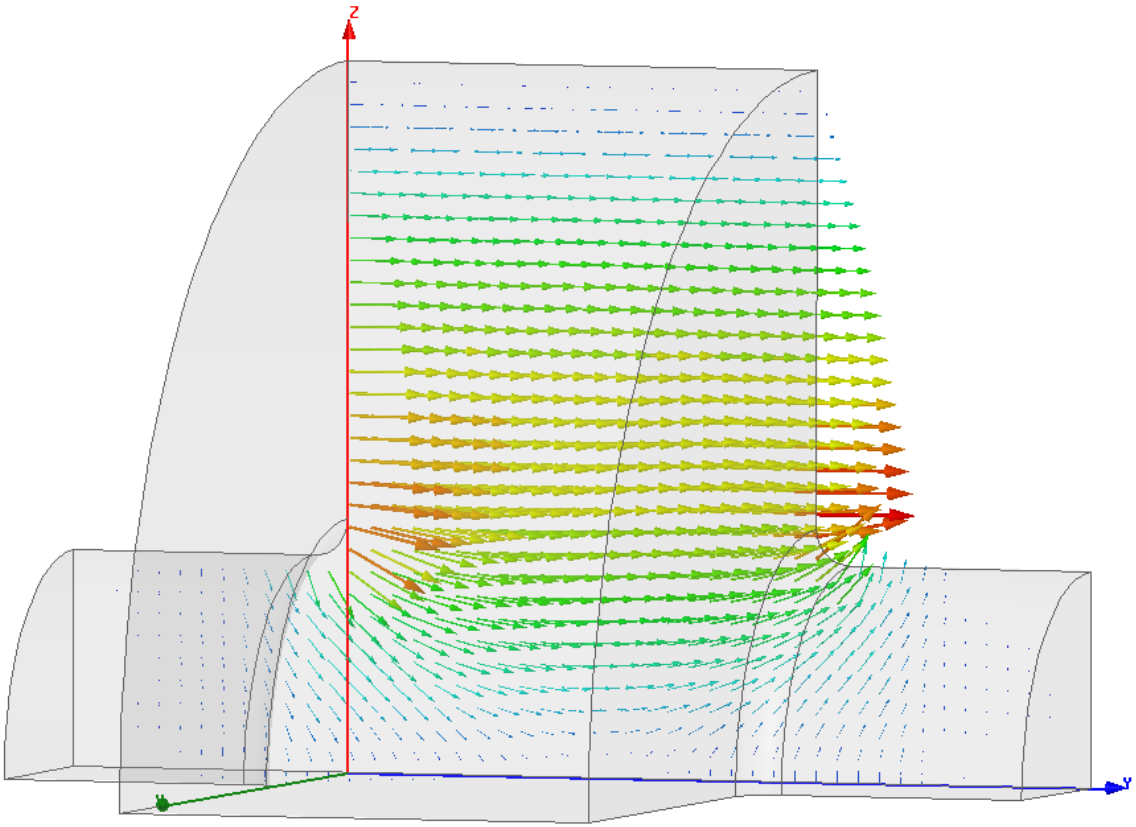

What do I mean by this?

Consider the acceleration by the $TM_{0,1,0}$ mode in a pillbox cavity.

The field pattern is J_0, a Bessel function. Consequently you have a radial dependence of the integral and you expect to have rf (de)focusing.

BUT

over a circular beam aperture there is no variation of the integral of E_z so no focusing!

Why? I would need to study this proof more to be in a position to teach it… But the essential element is that with a beam pipe, the bunch does not cross any conducting charges. This means that there are conservation of flux integrals over volumes inside the beam aperture.

For the $TM_{0,1,0}$ mode the flux lines in the center of the cavity only end on the cavity beam pipe, so you get the same projected and integrated E_z at all radii inside the beam pipe.

The consequence of this is that, for a circular geometry, with a circular beam pipe, you can expand the E_z integral as,

$$\left(\frac{r}{a}\right)^m e^{im\vartheta}$$

And the consequence of being able to expand the fields in such a way is that for modes with

m=0: The E_z integral is constant so no kick.
m=1: The E_z integral varies strictly linearly across the beam aperture
m=2: etc.

On the other hand if the beam aperture, or the cavity, is not circular then you cannot expand the fields like shown above and you get variation in *r* and θ. You can make a rf quadrupole from oval cells or apertures.

Transverse wake potential in pillbox cavity.
3 mm σ beam, 1 mm off-set

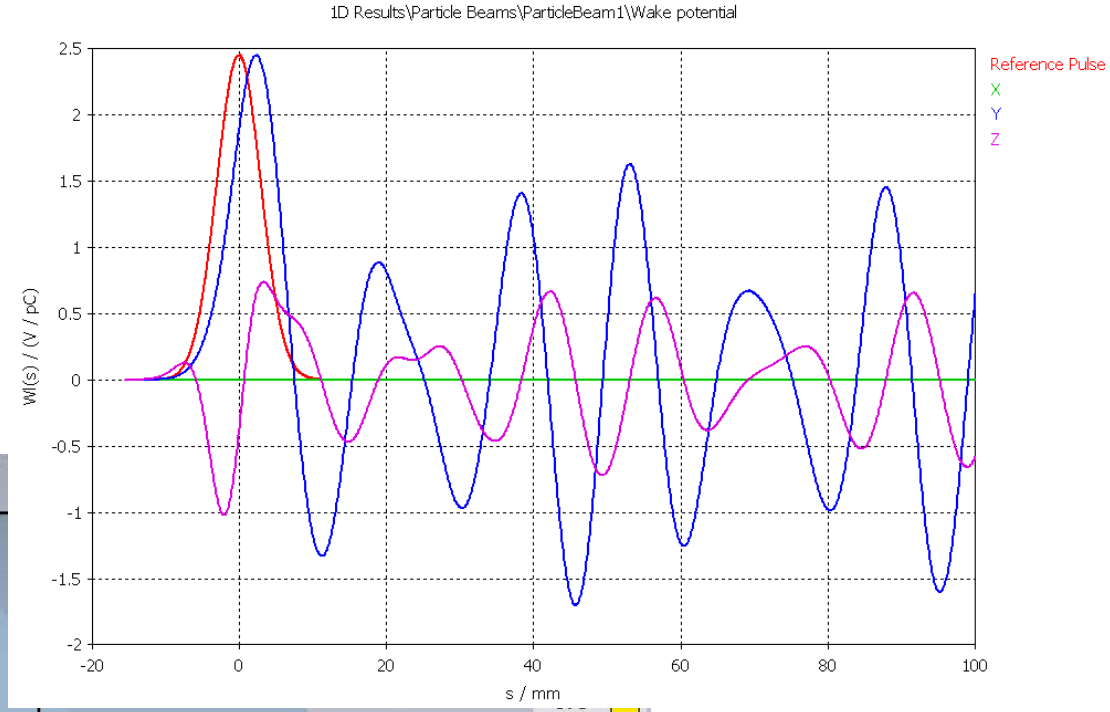

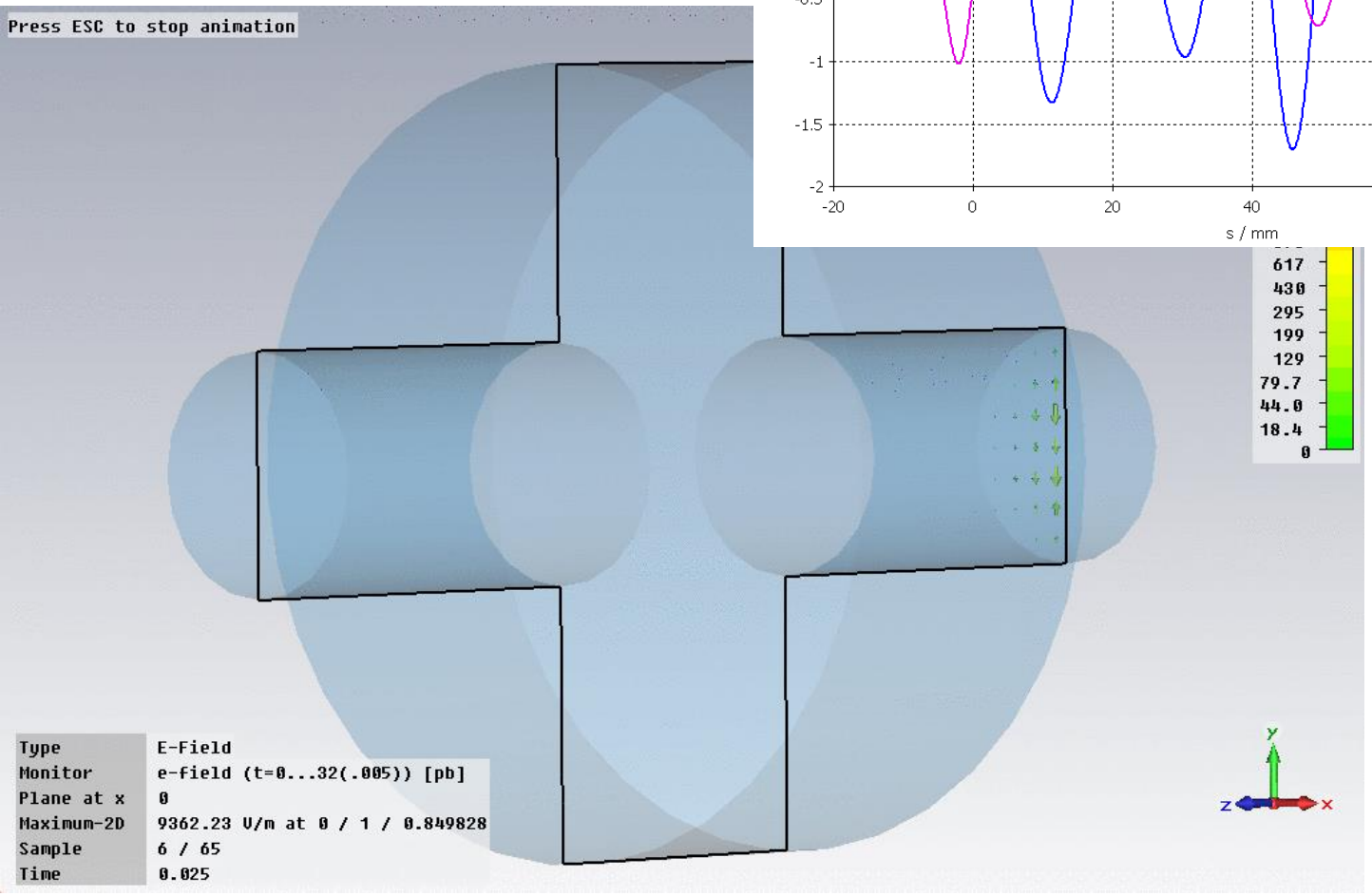

Transverse wake

Cavity:
10 mm radius
2 mm thick
Beam pipe:
1 mm radius
Beam:
σ = 0.5 mm
Offset 0.5 mm

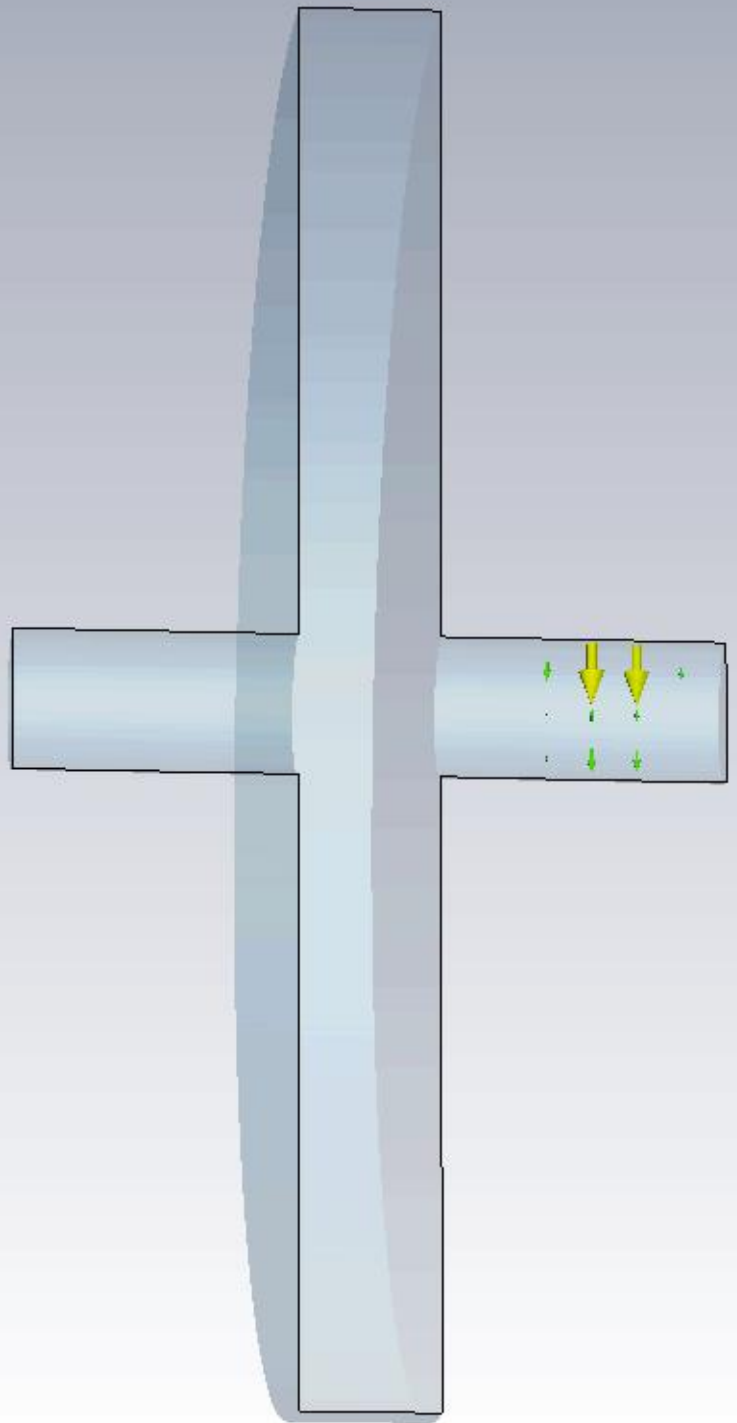

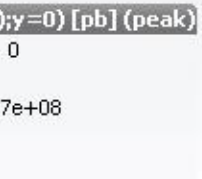

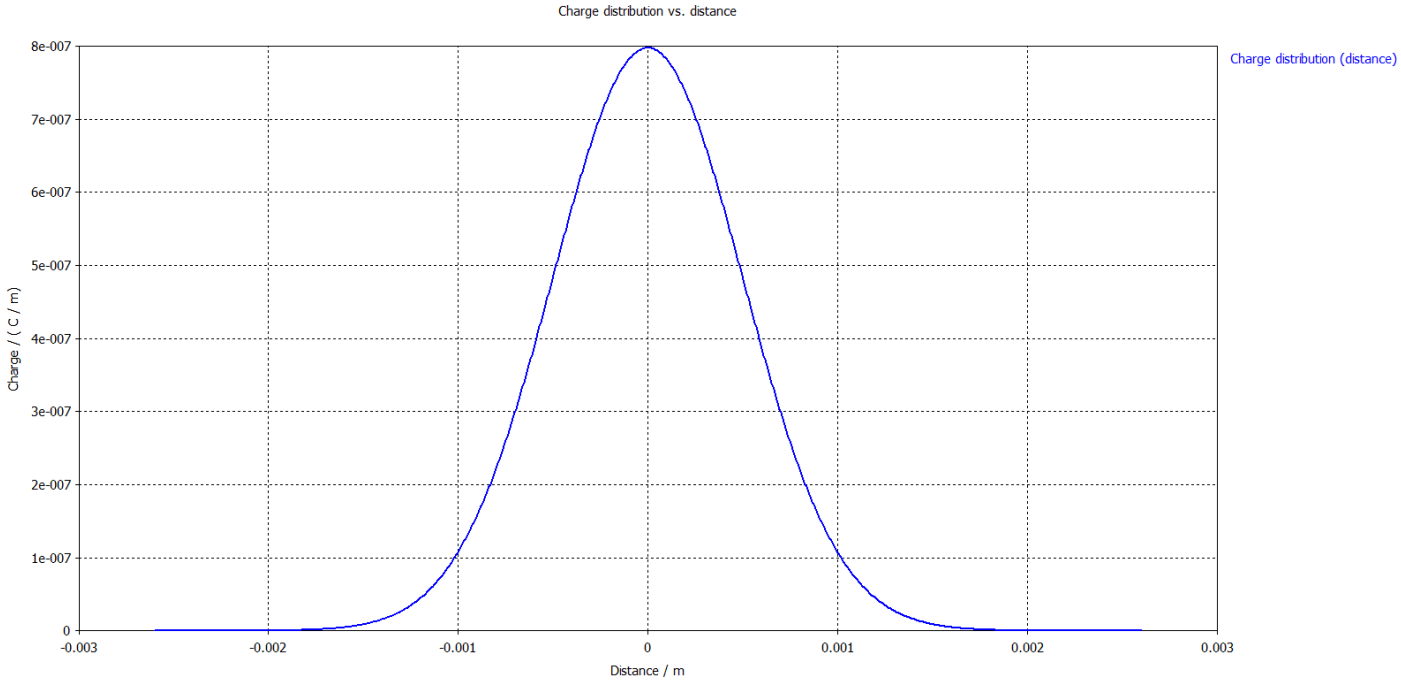
Charge distribution vs. distance
Charge distribution (distance)
Charge / (C / m)
8e-007
7e-007
6e-007
5e-007
4e-007
3e-007
2e-007
1e-007
0
-0.003
-0.002
-0.001
0
0.001
0.002
0.003
Distance / m

$$\sigma = 0.5\ mm$$

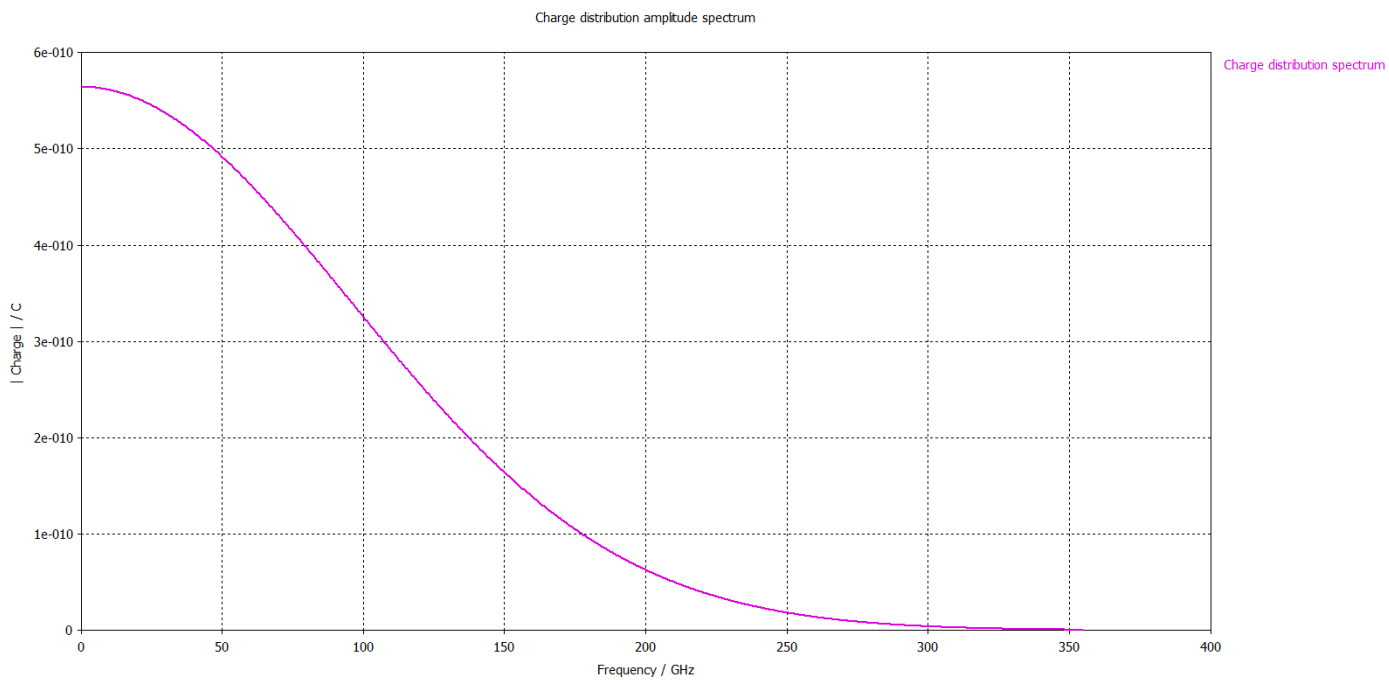
Charge distribution amplitude spectrum
Charge distribution spectrum
| Charge | / C
6e-010
5e-010
4e-010
3e-010
2e-010
1e-010
0
0
50
100
150
200
250
300
350
400
Frequency / GHz

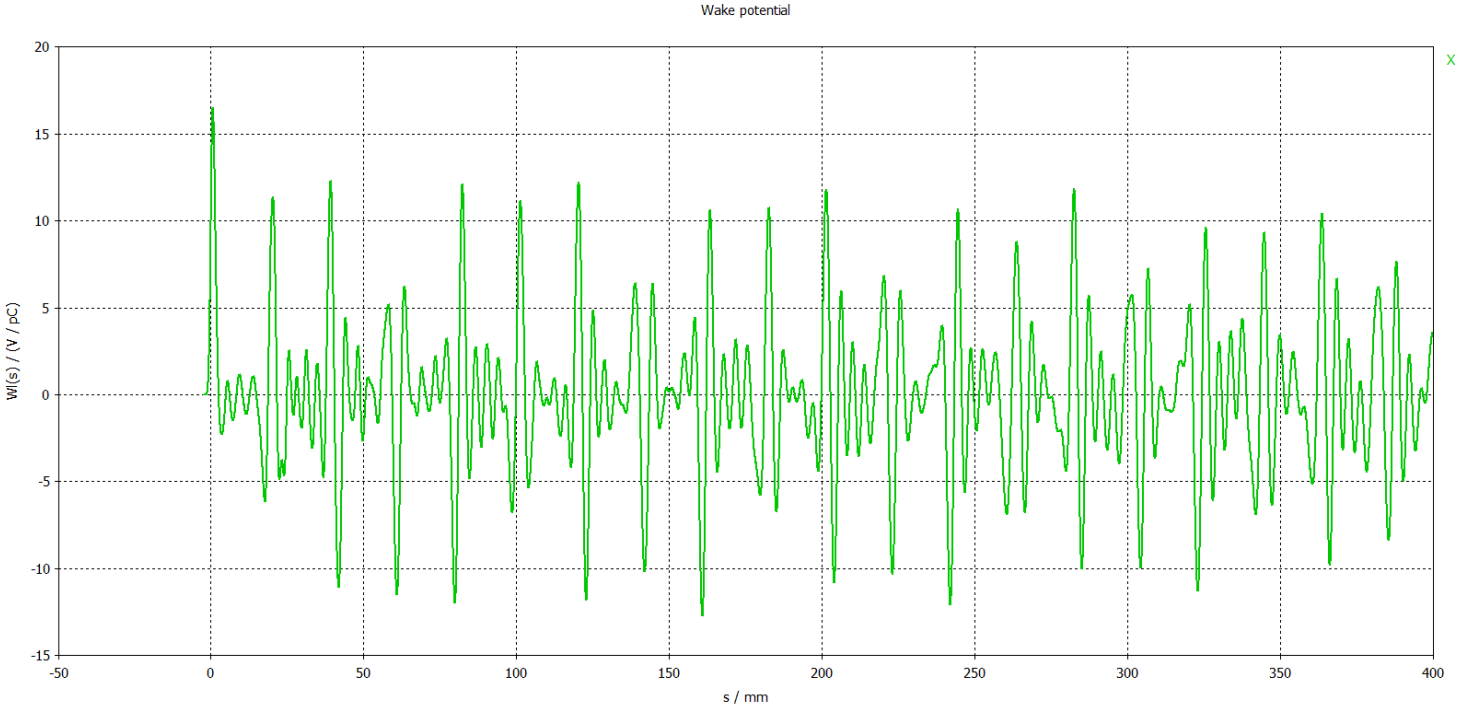
Wake potential
X
Wl(s) / (V / pC)
s / mm
20
15
10
5
0
-5
-10
-15
-50
0
50
100
150
200
250
300
350
400

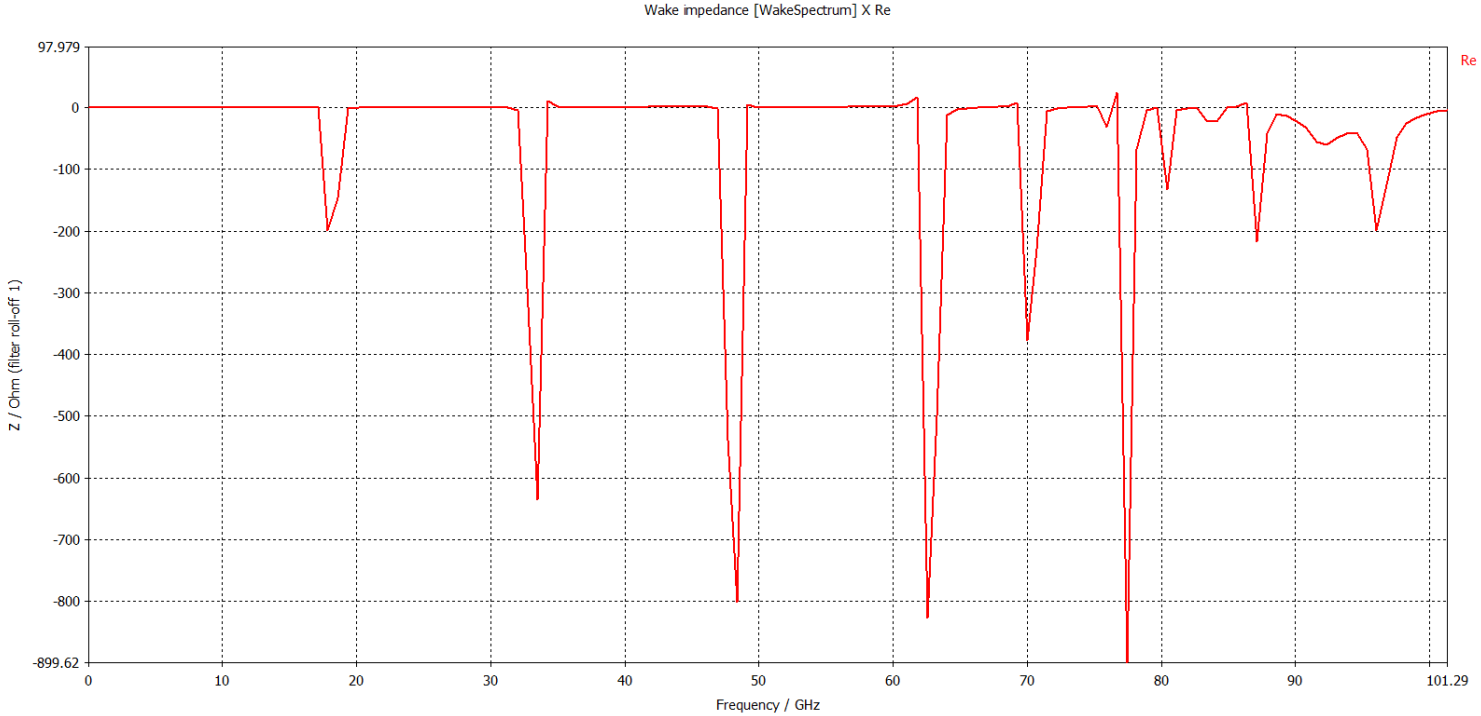
Wake impedance [WakeSpectrum] X Re
Re
Z / Ohm (filter roll-off 1)
Frequency / GHz
97.979
0
-100
-200
-300
-400
-500
-600
-700
-800
-899.62
0
10
20
30
40
50
60
70
80
90
101.29

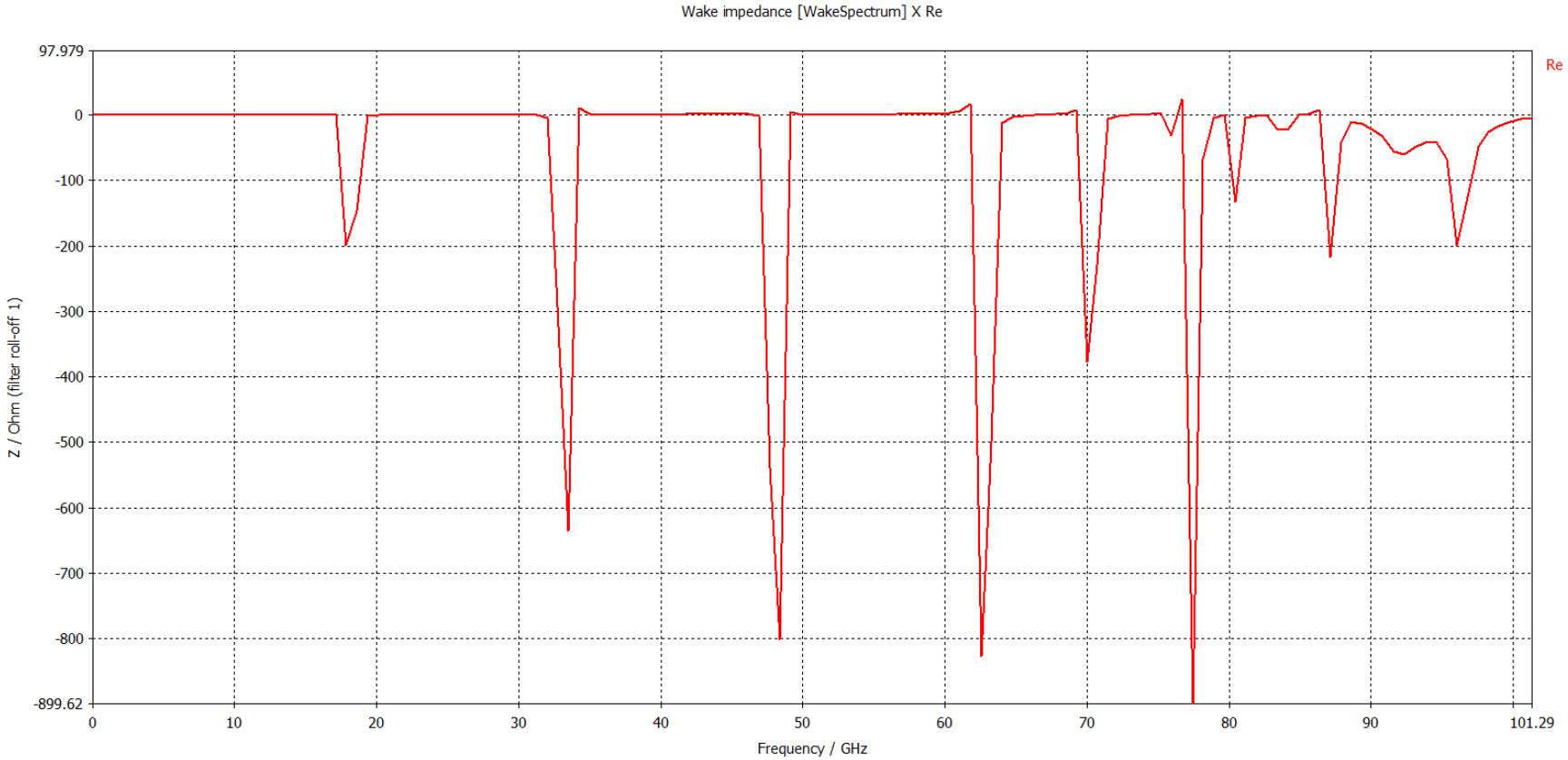

$TM_{1,1,0}$ $TM_{1,2,0}$ $TM_{1,3,0}$ $TM_{1,4,0}$ etc. – pillbox does not include beam pipe.

Pillbox cavity

$$f_{n,m,p} = \frac{c}{2\pi}\sqrt{\frac{x_{n,m}^2}{r^2} + \frac{p^2\pi^2}{d^2}}$$

Where for TM modes $x_{n,m}$ is the nth root of $J_m(r)$
r is the cell radius
d is the cell length

Wakefield from a bunch offset transversely.
By Kyrre Sjobaek

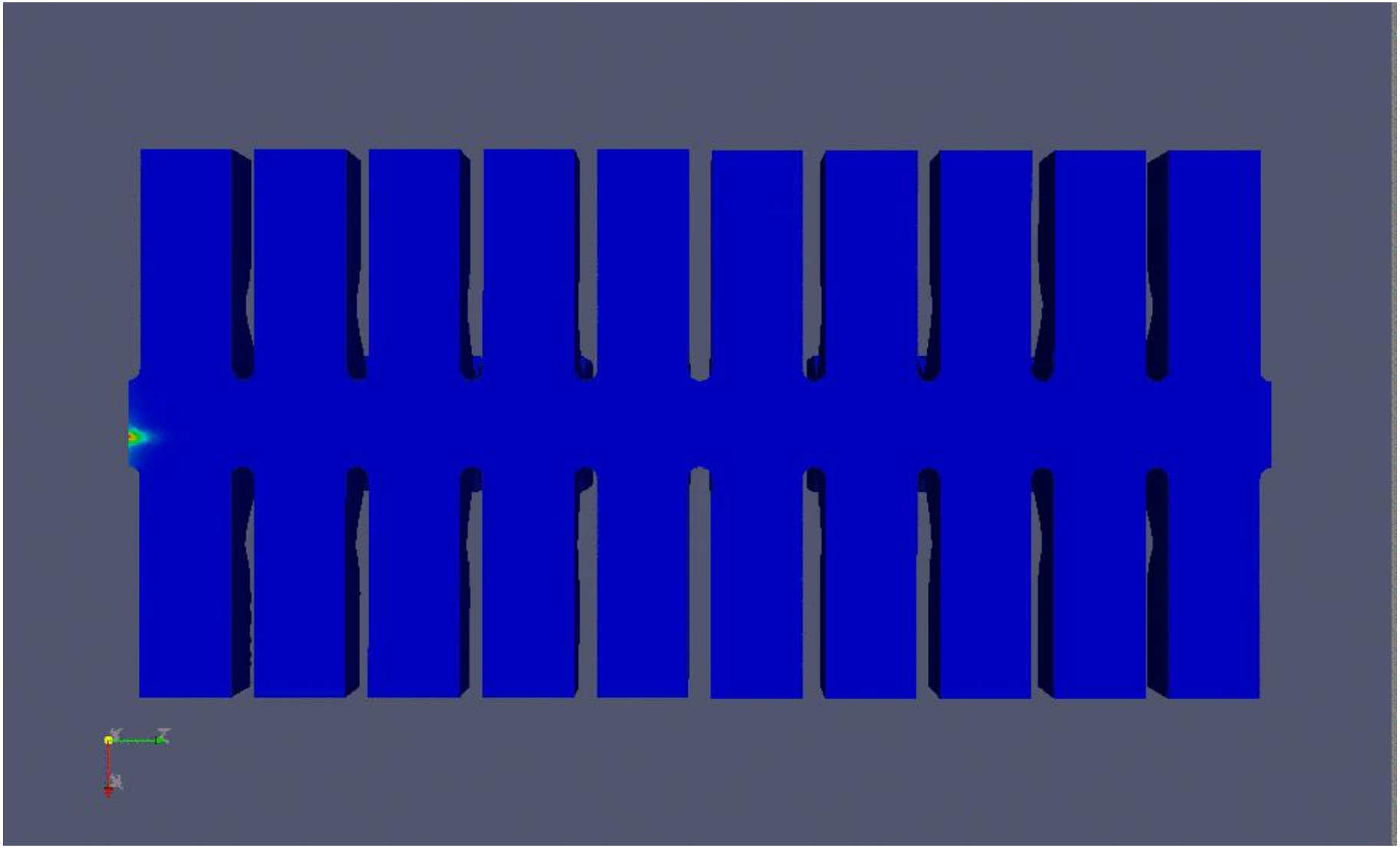

The most important special case

- Circularly symmetric structure.
- Small offsets so the transverse wake potential is dominated by dipole, *m*=1, modes.

We can write the transverse wake potential as

$$W_{\perp}(r,s) \approx \left(\frac{r}{a}\right)\sum_{n}\frac{2k_{1n}(a)}{\omega_{1n}a/c}\sin\left(\frac{\omega_{1n}s}{c}\right)$$

a is beam pipe diameter
r is particle path

One radial variation due to longitudinal wake.

$$\left[\frac{V}{pCmm}\right]$$

And of course wake for a finite length bunch is the convolution with the delta function wake:

$$W_z(s) = \int_0^\infty I(s - s') W_z(s') ds'$$