Potential of Mass-Production for SRF Cavity and Cryomodule in China

Jiyuan Zhai
IHEP, China

Acknowledgement

- Materials of Shanghai Coherent Light Facility (SCLF) are provided by Dr. Lixin Yin of SINAP, China.
- Mass production rate provided by the companies HERT, OTIC and WXCX.
- Please refer to Dr. Dong Wang's excellent talk "*SRF-based new accelerator projects in China: Related Infrastructures and Industries*" in the previous TTC meeting at Milan last February.

Outline

- SCLF project in Shanghai: preparation for 600 1.3 GHz 9-cell cavity and cryomodule mass production
- Potential of SRF industry and infrastructure in China
- Summary

SCLF Project

Courtesy of D. Wang (SINAP)

SCLF Linac

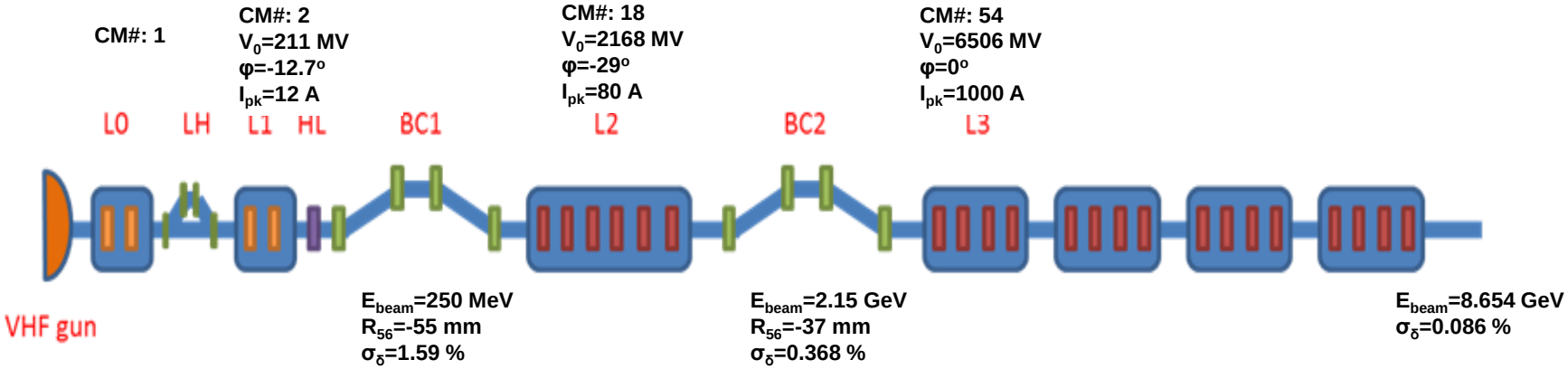

Parameters	Value
Electron beam energy (GeV)	8
Bunch charge (pC)	10-300
Rep. rate (MHz)	1
Normalized slice emittance in transverse (mm·mrad)	0.2-0.7
Peak current (A)	500-3000
Slice energy spread in rms	< 0.01%

- The SCLF linac consists of 75, 1.3 GHz, 8-cavity cryomodules for beam accelerating, and two 3.9 GHz, 8-cavity cryomodules for non-linear correction.
- SCLF Linac will be based on TELSA technology, but CW operation.

SCLF Linac

	No. of CM's	Avail. Cavities	Powered Cavities	Gradient (MV/m)	E_{out} (MeV)
L0	1	8	7	16.3	100
L1	2	16	15	14.8	326
HL	2	16	15	12.5	269
BC1	-	-			269
L2	18	144	135	15.5	2148
BC2	-	-			2148
L3	54	432	406	15.5	8653
	75+2	600+16			

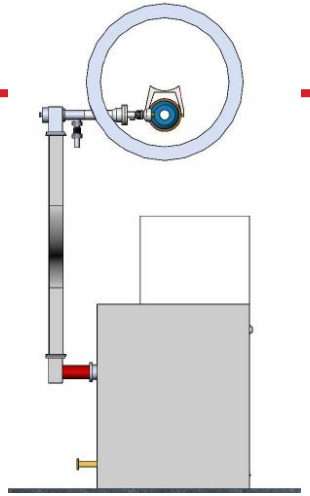

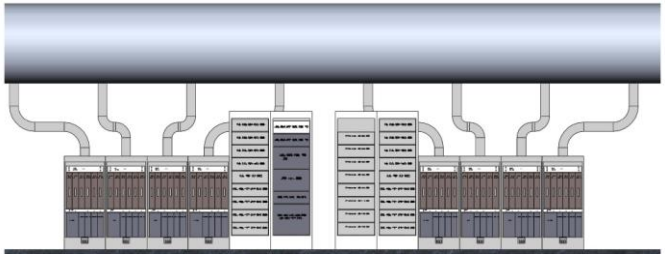

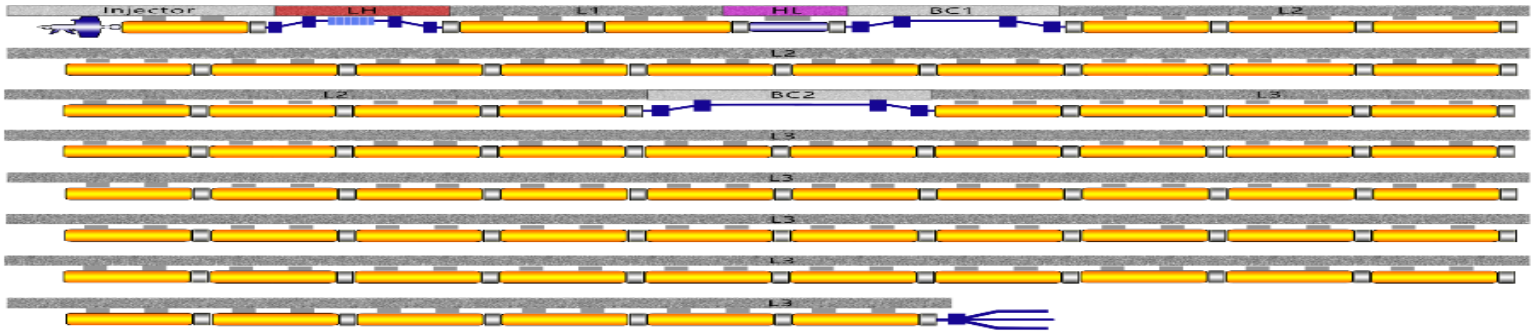

Cryogenic layout

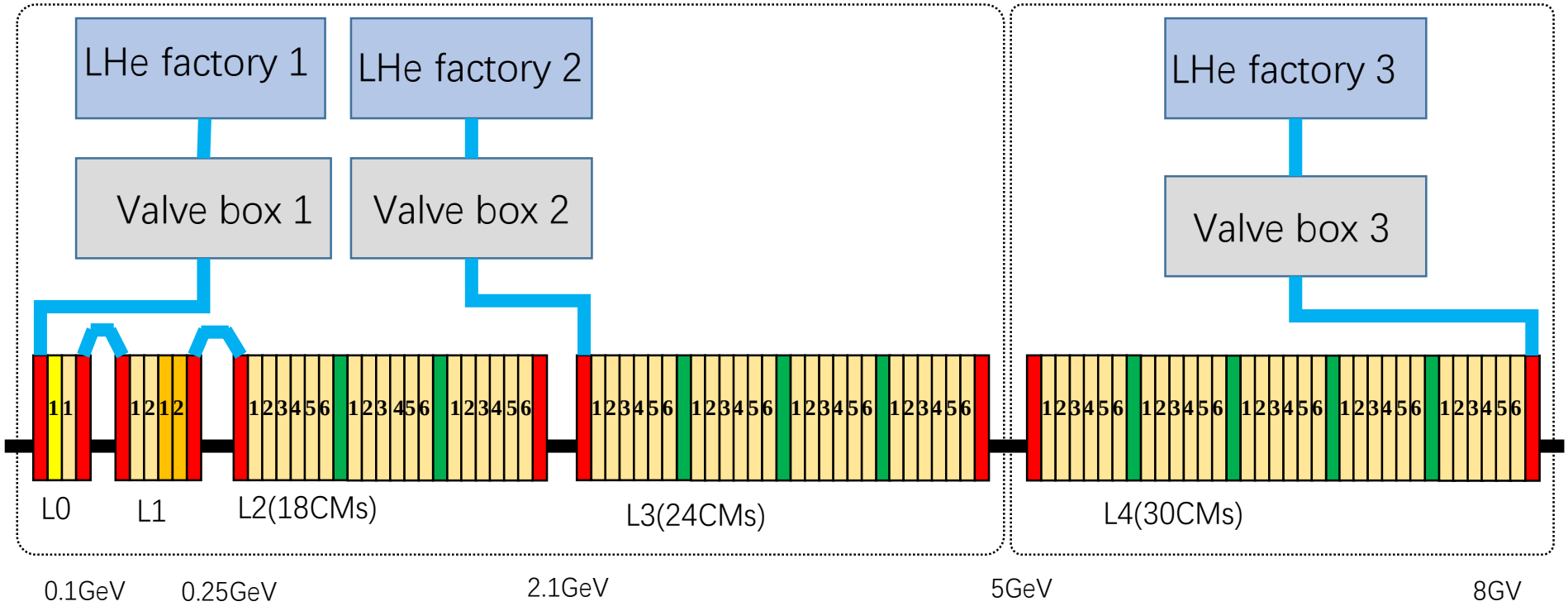

Project Schedule

Prototype Schedule

- Design 2017 ~ 2019
- Fabrication 2018 ~ 2019
- Vertical test 2019 ~ 2020
- CM assembly 2019 ~ 2021
- Horizontal test 2020 ~ 2021
- Beam test 2021 ~

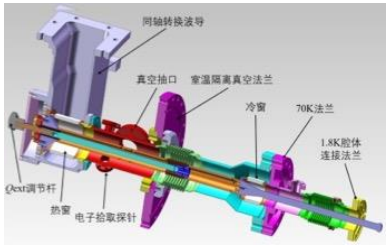

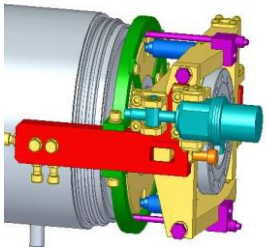

Production Schedule

- Design optimization 2020 ~ 2020
- Fabrication 2020 ~ 2023
- Vertical test 2021 ~ 2023
- CM assembly 2021 ~ 2023
- Horizontal test 2021 ~ 2023
- Installation 2021 ~ 2023

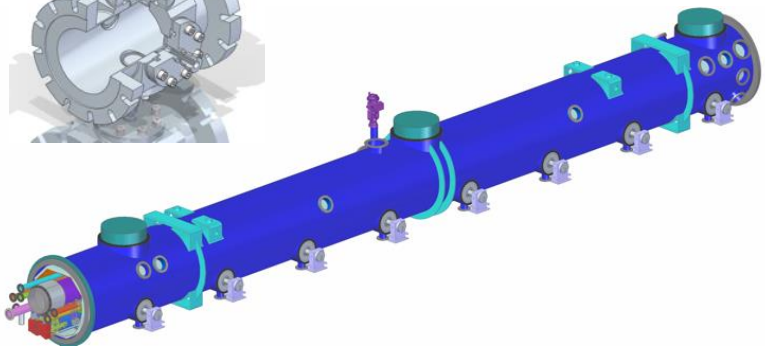

1.3 GHz 9-cell Cavity

- TESLA type nine cell cavity, equipped with two higher order modes coupler, one pickup and one fundamental input coupler.
- Q_0 = 2 ~ 3E10 @ E_{acc}=14 ~ 18 MV/m @ 2.0 K.
- Dynamic power loss : ~ 10 W/cavity.
- Key technique: electropolishing + nitrogen doping.
- High Q_0 requires low residual magnetic field: < 5 mGauss.

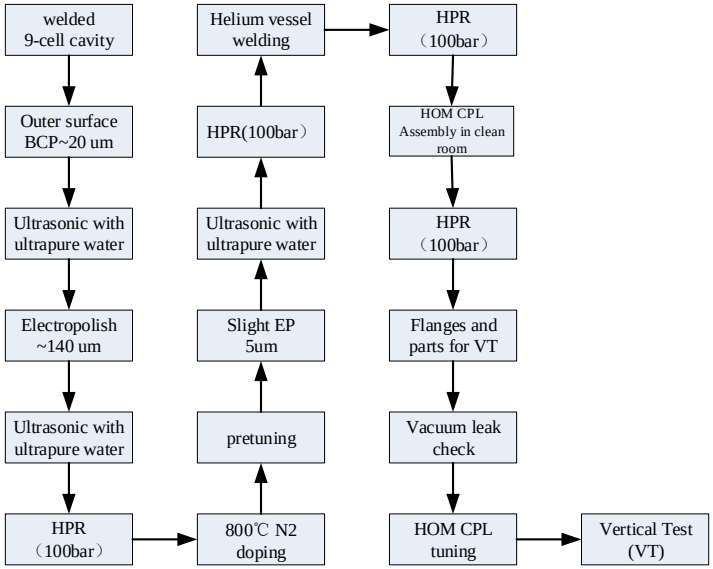

Symbol	Value
/	TESLA
/	CW
T	2.0 K
f	1300 MHz
R/Q	1036 Ω
r/Q	998 Ω/m
k_{cc}	1.87 %
E_p/E_{acc}	2.0
H_p/E_{acc}	4.26 mT/(MV/m)
φ_{iris}	70 mm
φ_{pipe}	78 mm
Lorentz detuning	≤ 1.5 Hz/(MV/m)
Q_0	$2 \sim 3\times10^{10}$
E_{acc}	14 ~ 18MV/m
/	≥ 95 %
Q_{ext}	4.12×10^{7}
Q_{e_hom}	$< 10^{6}$

Cavity R&D Plan

G1 — 中国科学院上海应用物理研究所 Shanghai Institute of Applied Physics, Chinese Academy of Sciences; 哈爾濱工業大學 HARBIN INSTITUTE OF TECHNOLOGY

G2 — OSTEC Ningxia

G3 — 中国科学院高能物理研究所 Institute of High Energy Physics Chinese Academy of Sciences; 高能锐新 HE-RACING TECHNOLOGY

8 single cell Cavities (EP+N2 doping RD) —Recipe→ 24 9-cell Cavities

- G1: 8 cavities (Fine Grain, OTIC,TD,Heraus...)
- G2: 8 cavities (Large Grain, OTIC)
- G3: 8 cavities (FG, TD, Heraus)

1) 4 cavities: Traditional Surface treatment
2) 4 cavities: EP+N2 doping

Performance judgement (Decided FG or LG, and recipe)

- G?: 8 cavities
- G?: 8 cavities

Phase-I (2019.06) —In parallel→

- 4 LG cavities with DESY (OTIC Nb material)
- 4 FG cavities from RI or Zanon (OTIC Nb material)

Phase-II, (2019.12)
Meet specification and fix recipe

Totally, 48 prototype cavities and couplers, 6 cryomodules

Beam Test Plan

- Confirm the components and CM dynamic performance and parameters.
- Confirm the installation and commissioning procedure.
- Organize and train the installation and operation team.
- Accumulate the operation experience for SC Linac.

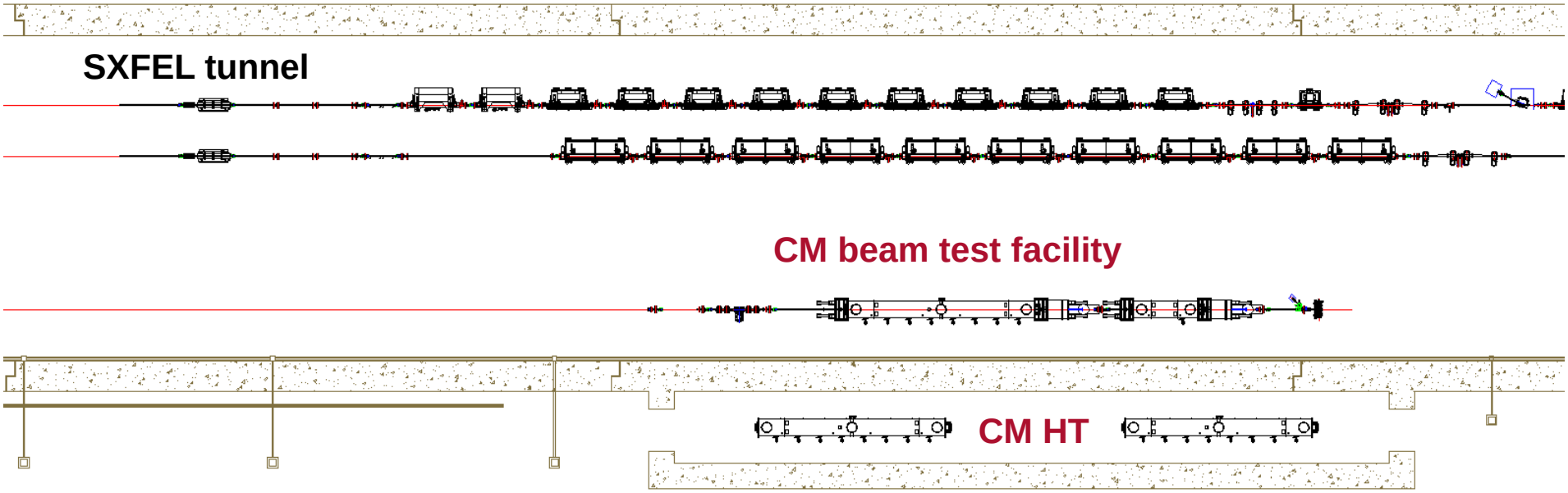

SRF Production Potential

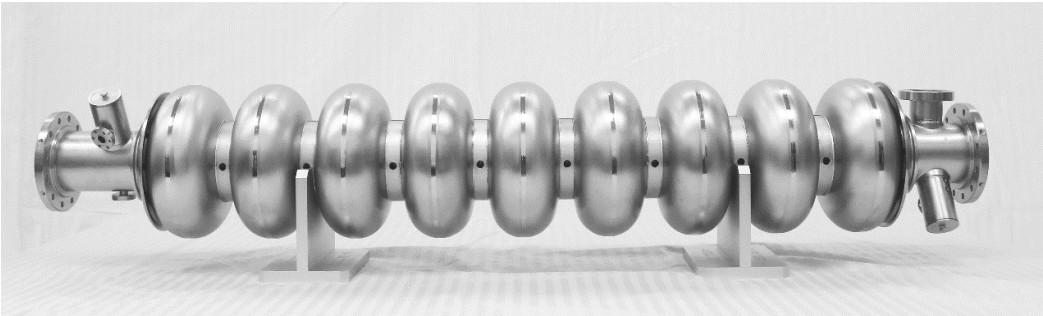

- HERT at Beijing and Huizhou: 150 cavities and 200 couplers per year
- OTIC at Ningxia: 80~100 cavities per year (and 10 tons RRR Nb per year)
- CX at Wuxi: 100 cryomodules per year
- Other potential vendors: one for coupler and one for cavity
- Total production potential per year in China: ~ 400 cavities, ~ 400 couplers, ~ 100 cryomodules (if half of cryomodules tested)

SRF Infrastructure at SINAP

- A 3000 m^2 assembly and test workshop is under construction at SINAP campus
- The cavity VT, cryomodule assembly and HT can be performed in the workshop
- A 1 kW @ 2 K cryogenic system is under construction

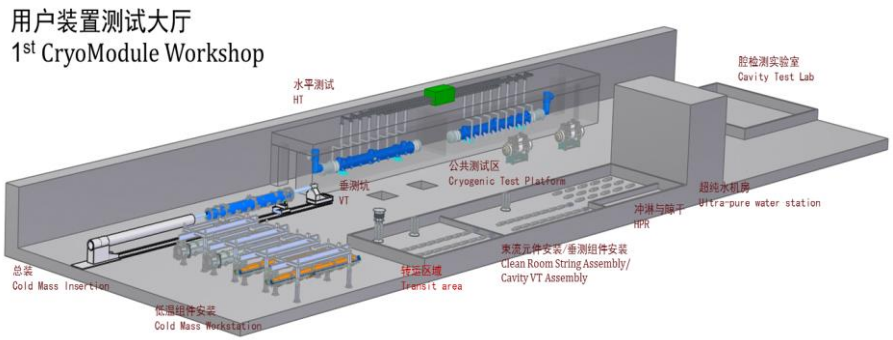

- Construction: 2017-2020
- Test 400 cavities (couplers) per year
- Assembly and test 20 cryomodules per year

SRF Infrastructure at IHEP

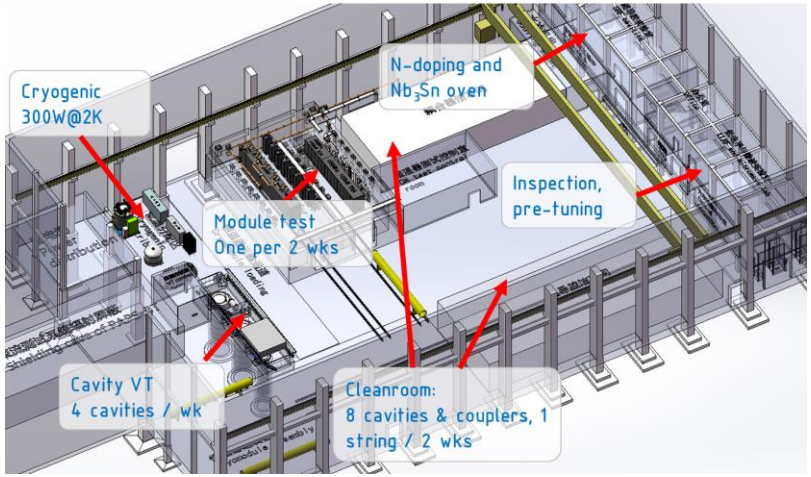

- 4000 m^2 SRF Lab in Huairou
- Construction: 2017-2020
- Test 400 cavities (couplers) per year
- Assembly and test 20 cryomodules per year
- 300 W @ 2 K cryogenic system

Summary

- Many Chinese institutes and companies are working together to build the 600 1.3 GHz 9-cell cavities and 75 cryomodules for SCLF to be completed in 2023.
- The SCLF project and the resulting SRF expertise, infrastructures and industries will open the way to ILC cryomodule mass production in China.