International Linear Collider Workshop 2008
LCWS08 and ILC08
November 16-20, 2008
University of Illinois at Chicago

Simulations of Coupler Kicks.

V. Yakovlev, N. Solyak, A. Lunin, I. Gonin, and A. Latina.

Fermi National Laboratory

19 November, 2008

ILC RF cavity with the HOM and input couplers:

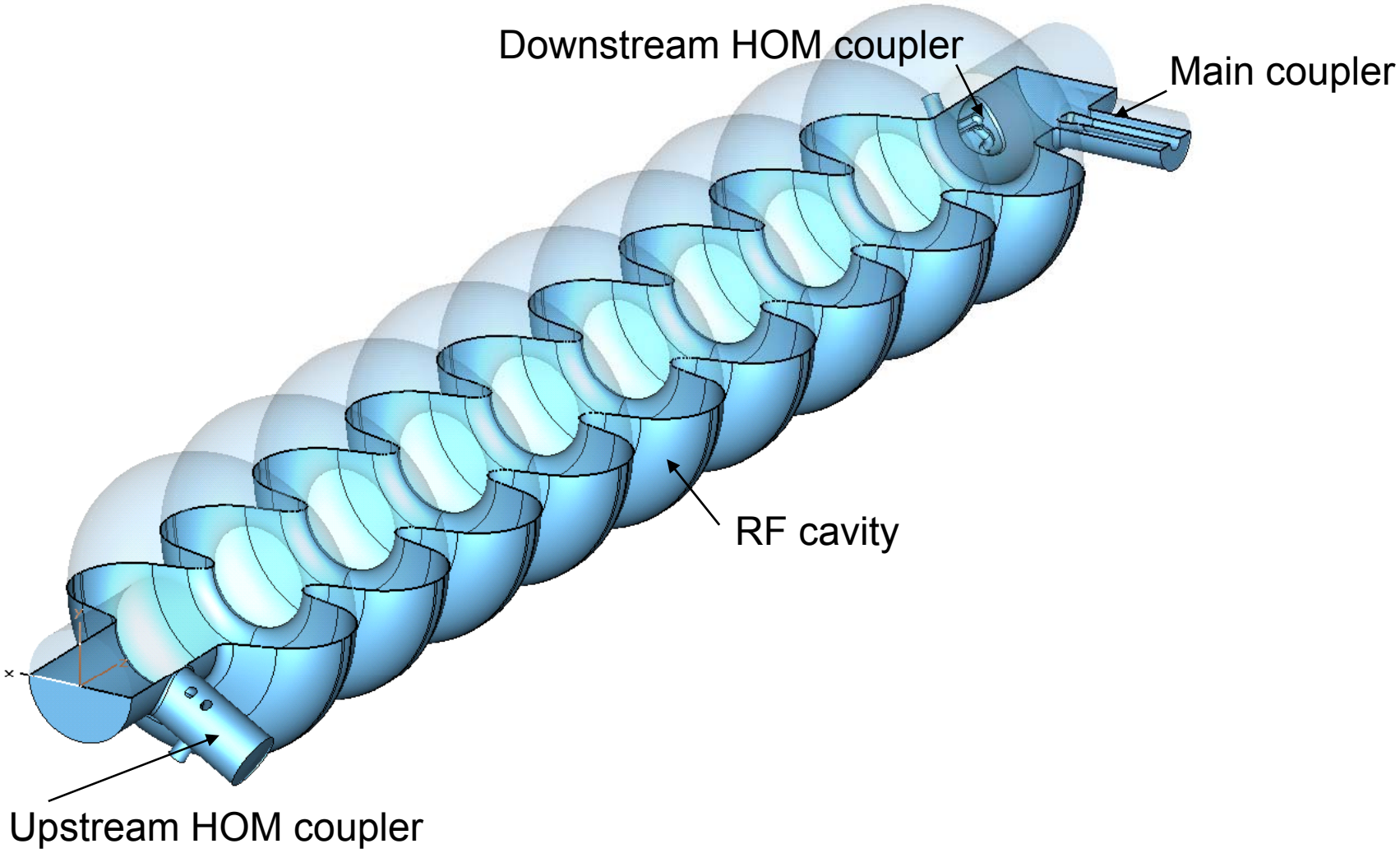

- The couplers break the RF field symmetry and cause transverse RF kick.
- The couplers break the symmetry of the cavity and cause transverse wake field.
- Both RF kick and wake fields may be a reason of a beam emittance dilution.
- DESY* made the first calculations of the RF kick and wake fields. The calculations show that both RF kick and wake fields may be a serious problem that could require the cavity improvement.
- FNAL, SLAC, DESY, and TEMPF completed the calculations**

***I. Zagorodnov, and M. Dohlus, ILC Workshop, DESY,31 May, 2007.**

****K.L.F. Bane, C. Adolphsen, Z. Li, M. Dohlus, I. Zagorodnov, I. Gonin, A. Lunin, N. Solyak, V. Yakovlev, E. Gjonaj, T. Weiland, EPAC2008, TUPP019.**

RF kick

Simple estimations of the transverse fields caused by the main coupler:

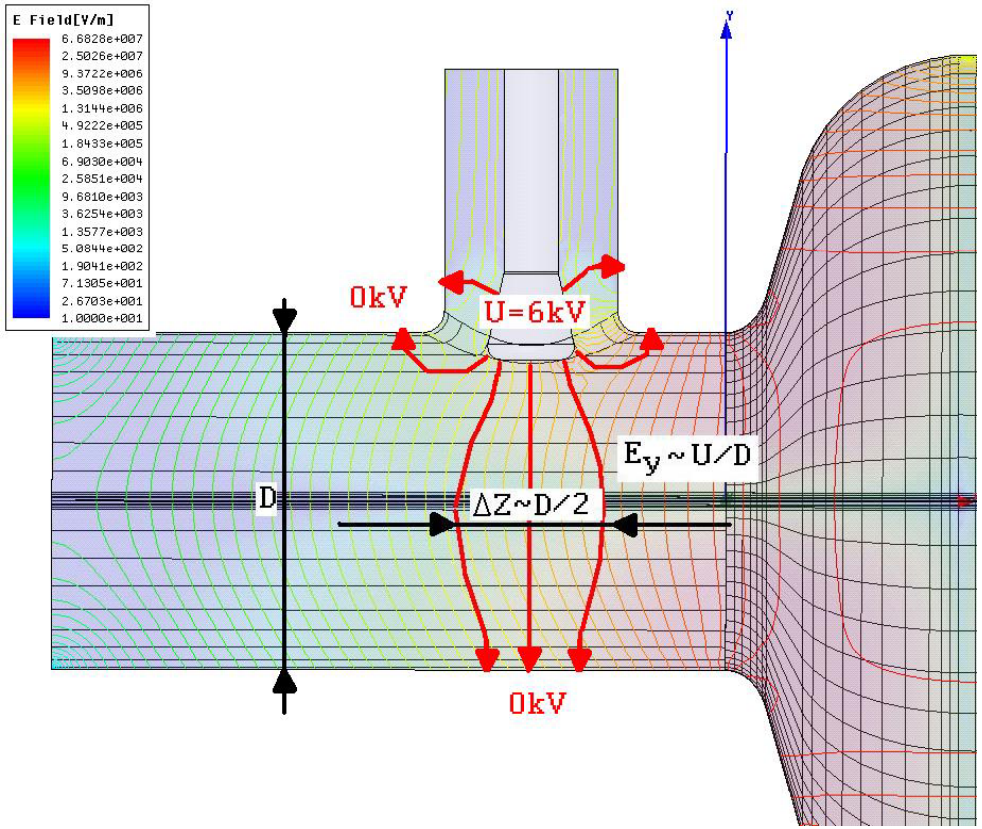

RF voltage:
$U=(2PZ)^{1/2}$, Z–coax impedance;
for P=300 kW and Z≈70 Ohms
$U \approx 6$ kV

Transverse kick:

$\Delta p_y \cdot c \approx eE_y \, \Delta Z \approx eU/D \cdot D/2 = eU/2.$

$$\frac{\Delta p_y c}{\Delta U_{acc}} \approx \frac{U}{2U_{acc}} = \frac{6kV}{2\times 30MV} = 100\times 10^{-6}$$

The RF field calculation precision should be better than 10^{-5}!

Transverse kick caused by the couplers acts on a bunch the same direction for all the RF cavities of the linac.

Real part may be compensated by the linac feedback system;

Imaginary part dives the beam emittance dilution.

Mesh generation for HFSS for high-precision field calculations near the axis:

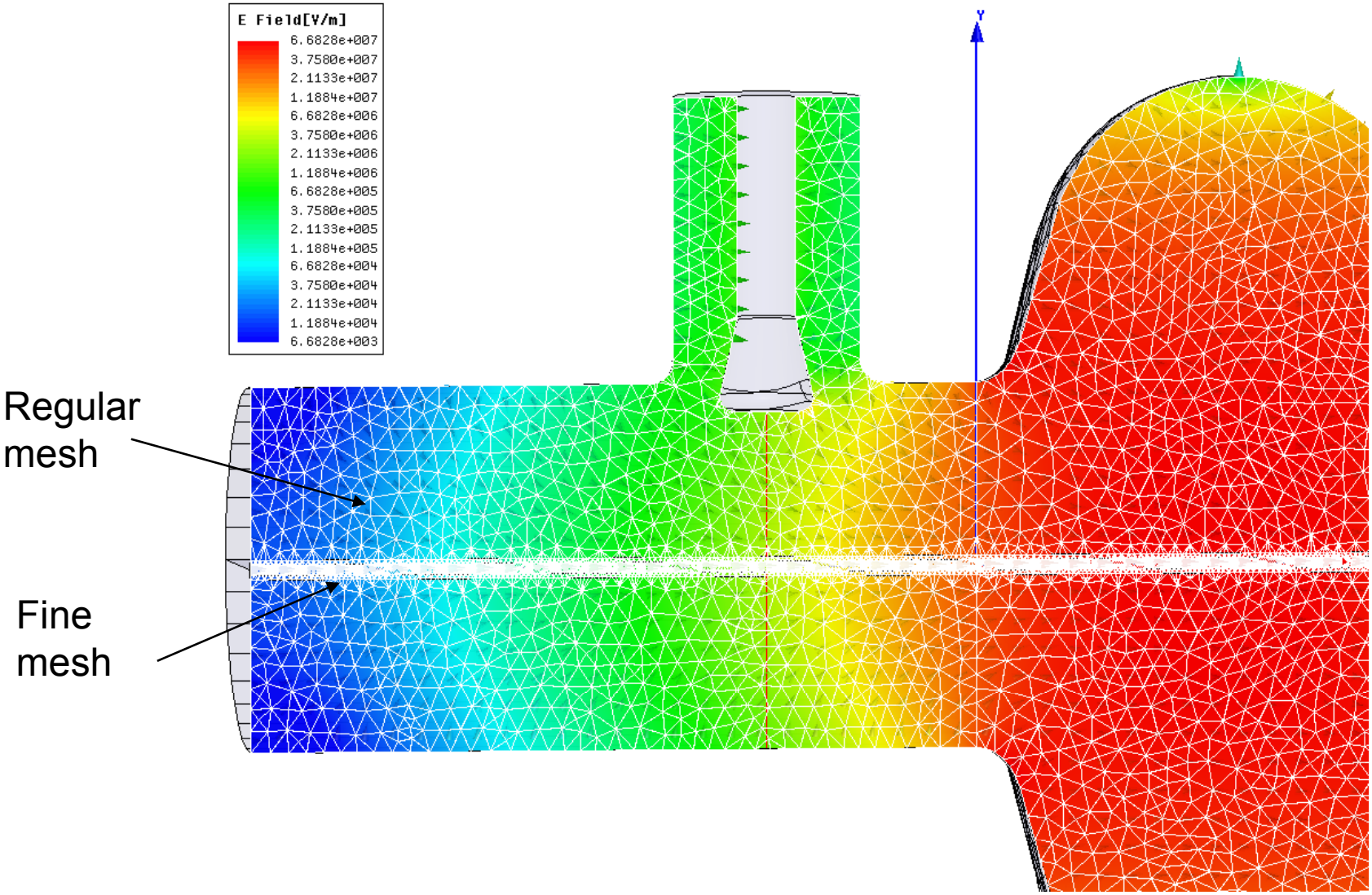

Total number of the mesh nodes is up to 500,000

Zoomed mesh near the axis:

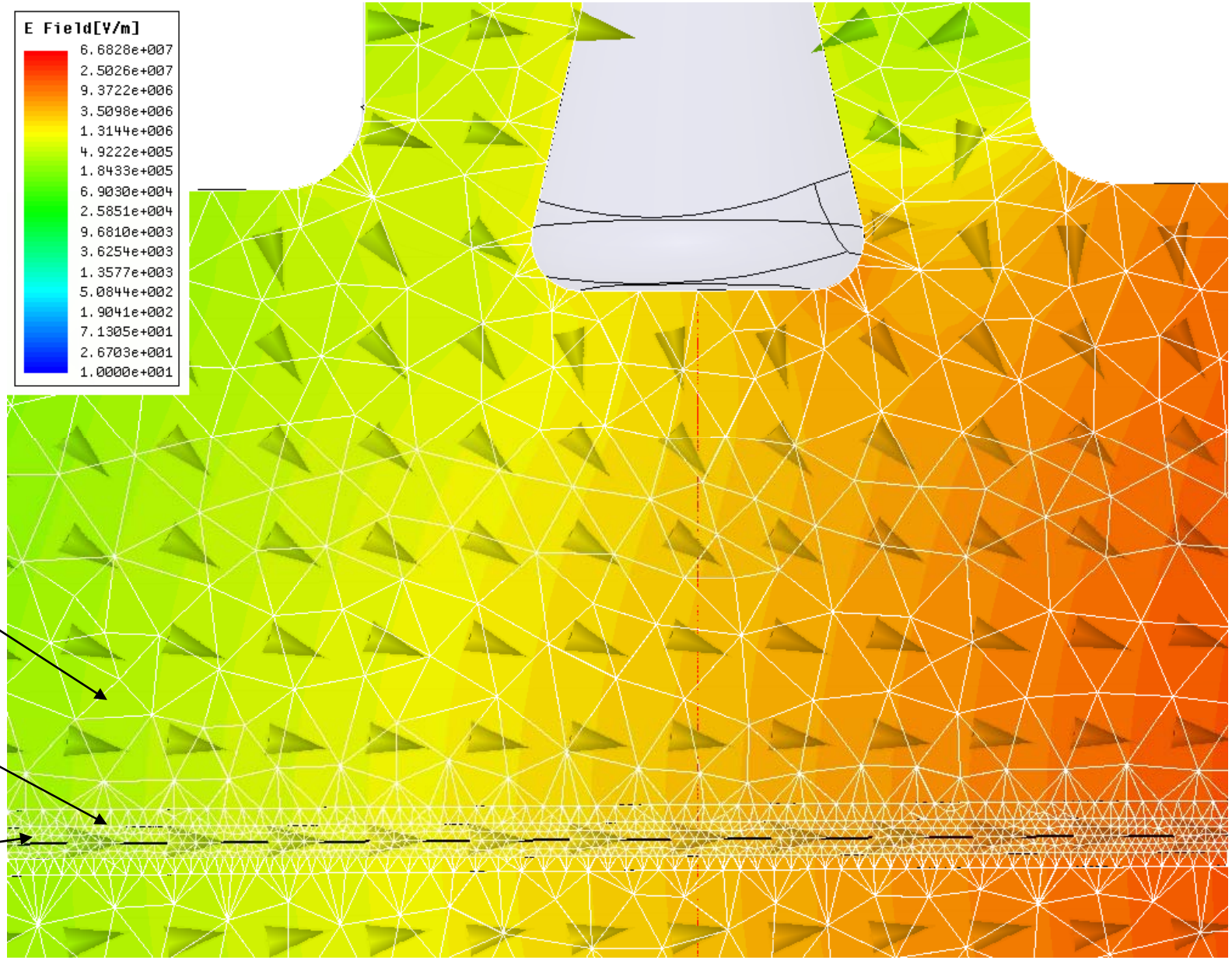

Regular mesh

Intermediate mesh

Fine mesh

Results of the main coupler simulations:

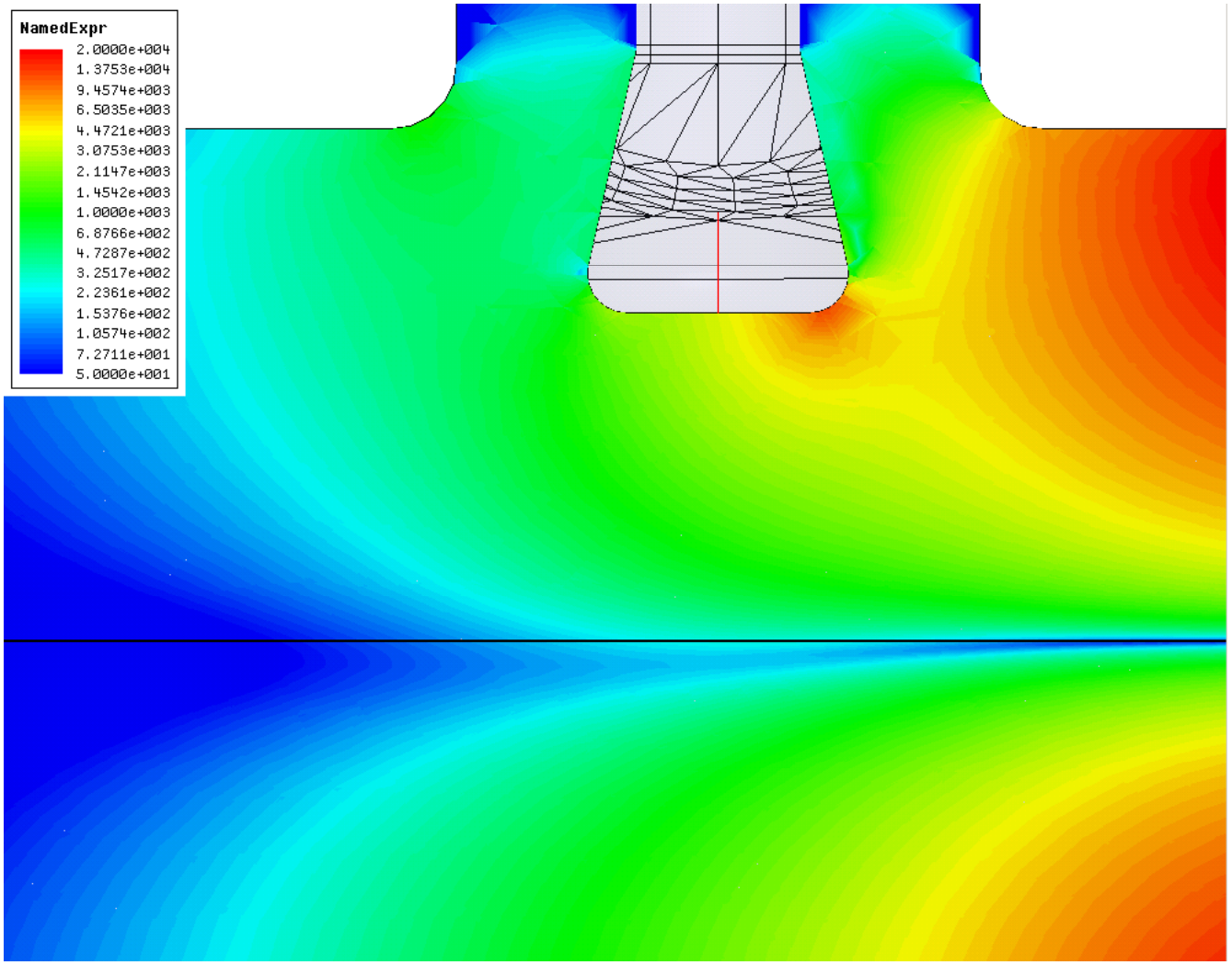

(Strong coupling case)

Axial transverse fields for HOM coupler at different RF phases:

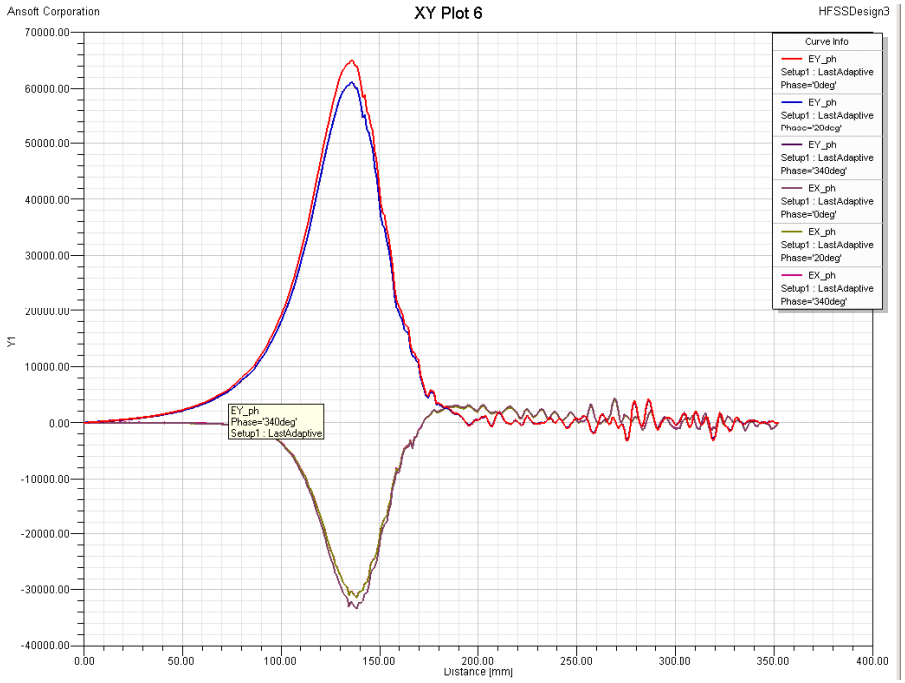

Electric field

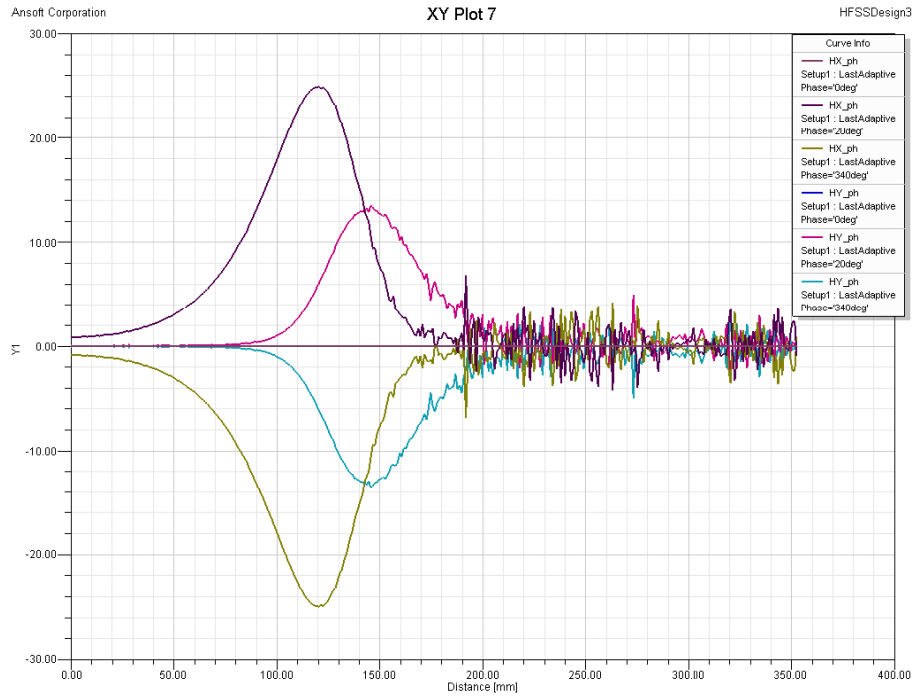

Magnetic field

CALCULATION OF RF KICK. UPSTREAM END

$$Vx := \int_0^{Zend} \left[(EX(z) - HY(z)) \cdot \exp\left[i \cdot (\kappa \cdot z - \phi) \right] \right] dz$$

$$Vy := \int_0^{Zend} \left[(EY(z) + HX(z)) \cdot \exp\left[i \cdot (\kappa \cdot z - \phi) \right] \right] dz$$

Direct integration of fields component
(Lorentz force equation)

$$\Delta \vec{V}_{\perp} = i \frac{v}{\omega} \vec{\nabla}_{\perp} (\Delta V_{II})$$

Panofsky-Wenzel (PW) theorem

(in order to cross-check direct calculations only)

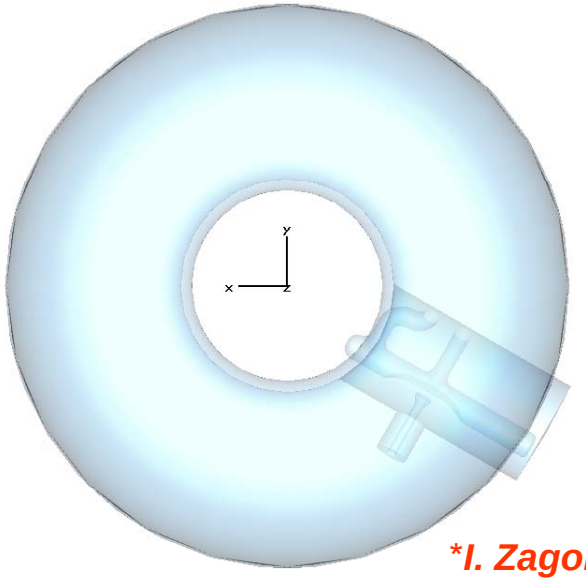

	FNAL (direct)	FNAL (PW)	DESY*	SLAC**
$\frac{10^6 \cdot V_x}{V_z}$	-68.8+3.7i	-65.6+7.6i	-57.1+6.6i	-59.5+7.2i
$\frac{10^6 \cdot V_y}{V_z}$	-48.3-3.4i	-53.1-2.1i	-41.4-3.5i	-42.2-3.6i

**I. Zagorodnov, and M. Dohlus, ILC Workshop, DESY,31 May, 2007*
***K.L.F. Bane, C. Adolphsen, Z. Li, M. Dohlus, I. Zagorodnov, I. Gonin, A. Lunin, N. Solyak, V. Yakovlev, E. Gjonaj, T. Weiland, EPAC2008, TUPP019.*

CALCULATION OF RF KICK. DOWNSTREAM END

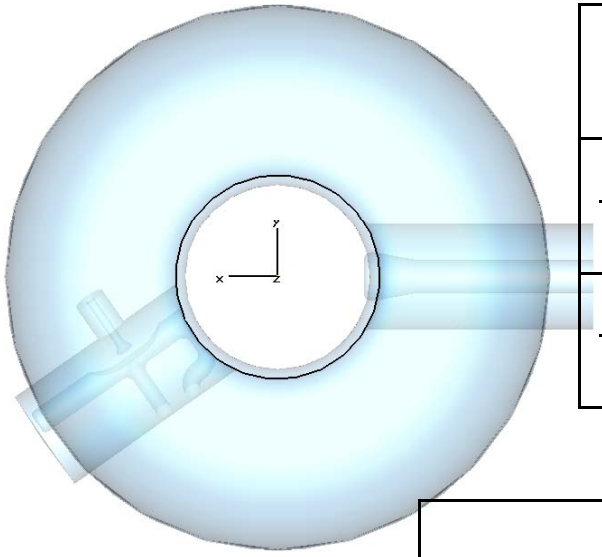

	FNAL (direct)	FNAL (PW)	DESY*	SLAC**
$\frac{10^6 \cdot V_x}{V_z}$	-36.5+66.1i	-27.3+67.2i	-25.0+51.5i	-28.8-53.0i
$\frac{10^6 \cdot V_y}{V_z}$	41.0+14.5i	40.9+12.8i	32.16+5.2i	37.6+9.2i

TOTAL RF KICK:

	FNAL# (direct)	FNAL# (PW)	DESY*	SLAC**
$\frac{10^6 \cdot V_x}{V_z}$	-105.3+69.8i	-92.9+74.8i	-82.1+58.1i	-88.3-60.2i
$\frac{10^6 \cdot V_y}{V_z}$	-7.3***+11.1i	-12.2+10.7i	-9.2+1.8i	-4.6+5.6i

#MWS simulations were done as well, and the results are consistent to the result of HFSS simulations.

**I. Zagorodnov, and M. Dohlus, ILC Workshop, DESY,31 May, 2007*

***K.L.F. Bane, C. Adolphsen, Z. Li, M. Dohlus, I. Zagorodnov, I. Gonin, A. Lunin, N. Solyak, V. Yakovlev, E. Gjonaj, T. Weiland, EPAC2008, TUPP019.*

******Cancellation between upstream and downstream couplers!***

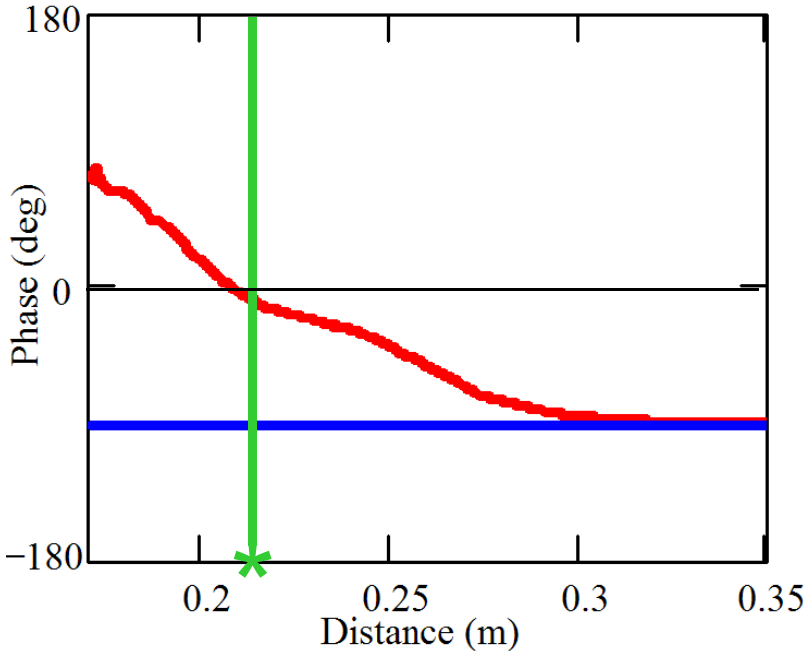

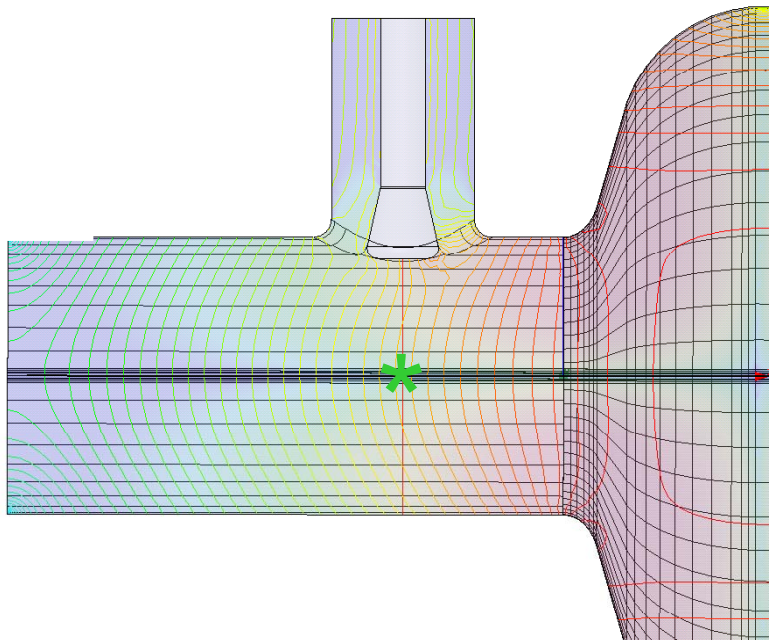

Phase shift between electric and magnetic fields along axis.

Red line – Power Coupler only (TW).

Blue line – HOM Downstream Coupler only (SW).

* - position of antenna central axis.

Transverse wakefield.

GdfidL simulations:

- GdfidL was installed on FNAL 80-node cluster (courtesy to Warner Bruns).
- Indirect method for the wake calculations;
- Moving mesh and Strang splitting scheme ;
- Cubic mesh is used ($h_x=h_y=h_z$);
- For the scheme used in GdfidL one should use $\sigma_z/h_z \geq 4\text{-}6$ in order to achieve convergence ;

The GdfidL Electromagnetic Field simulator*

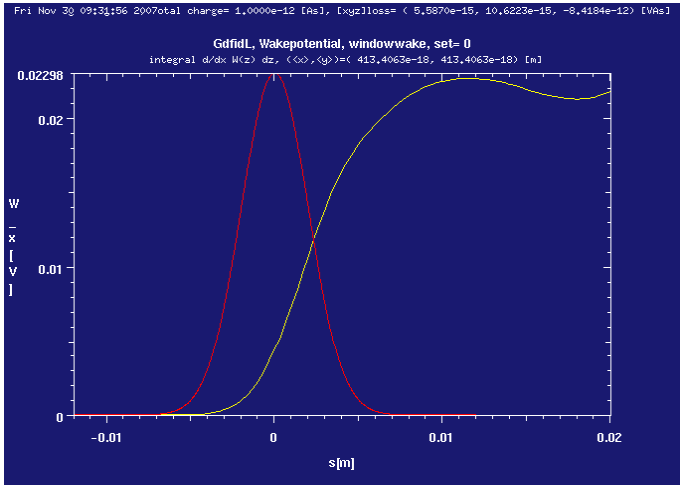

-wakes: longitudinal and transverse

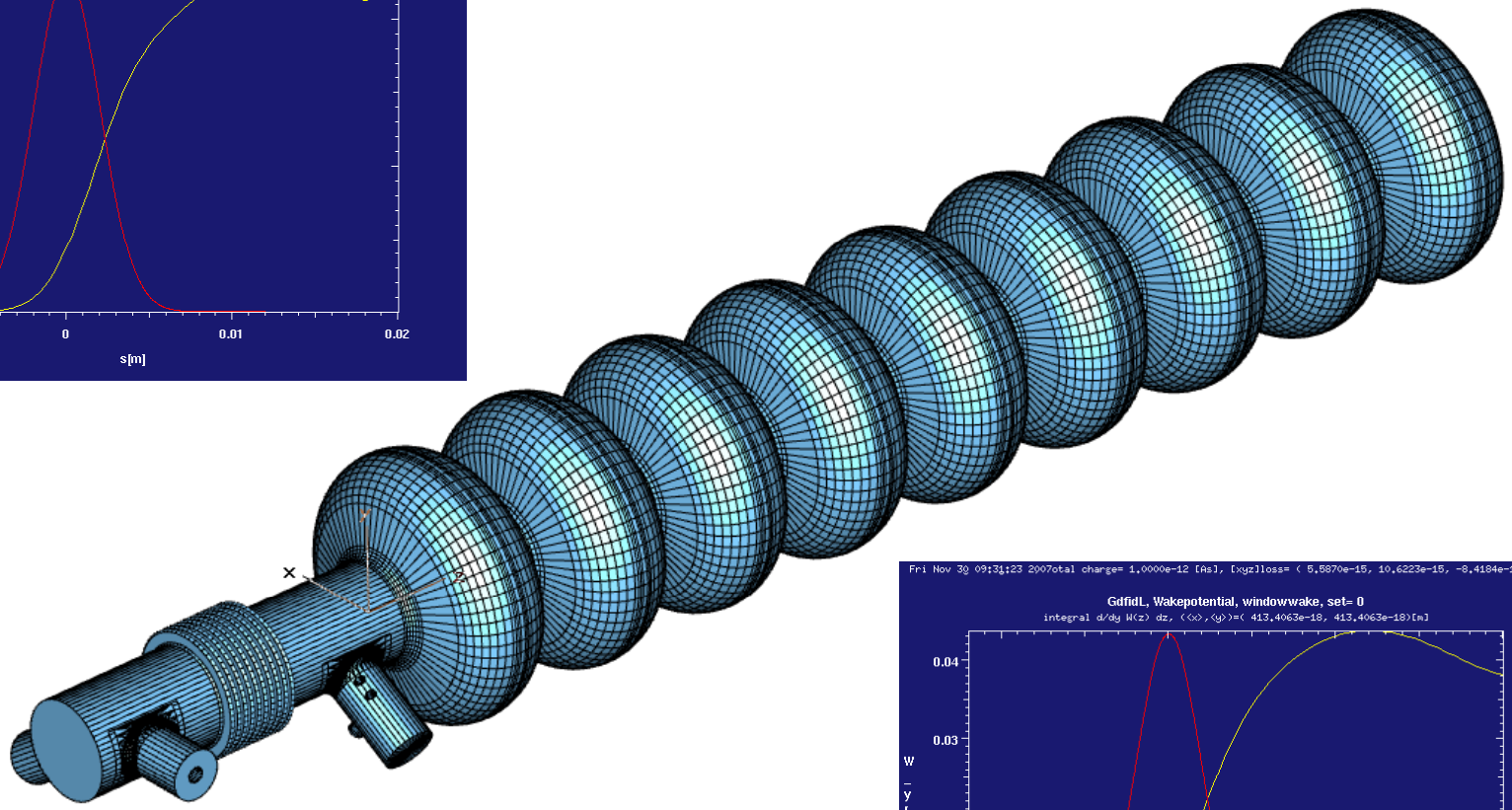

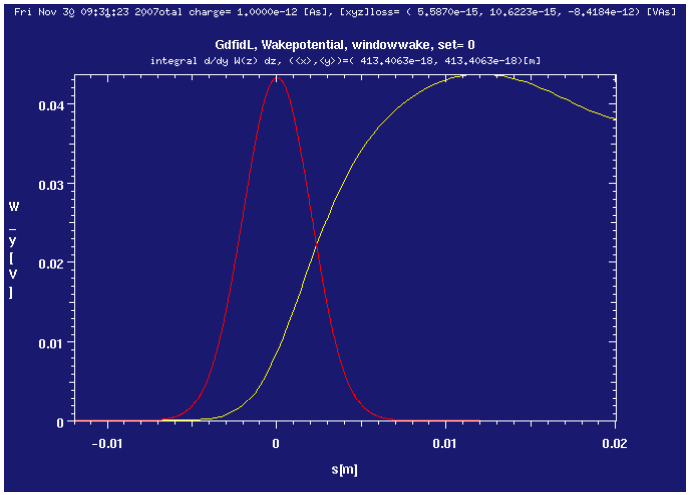

* http://www.gdfidl.de

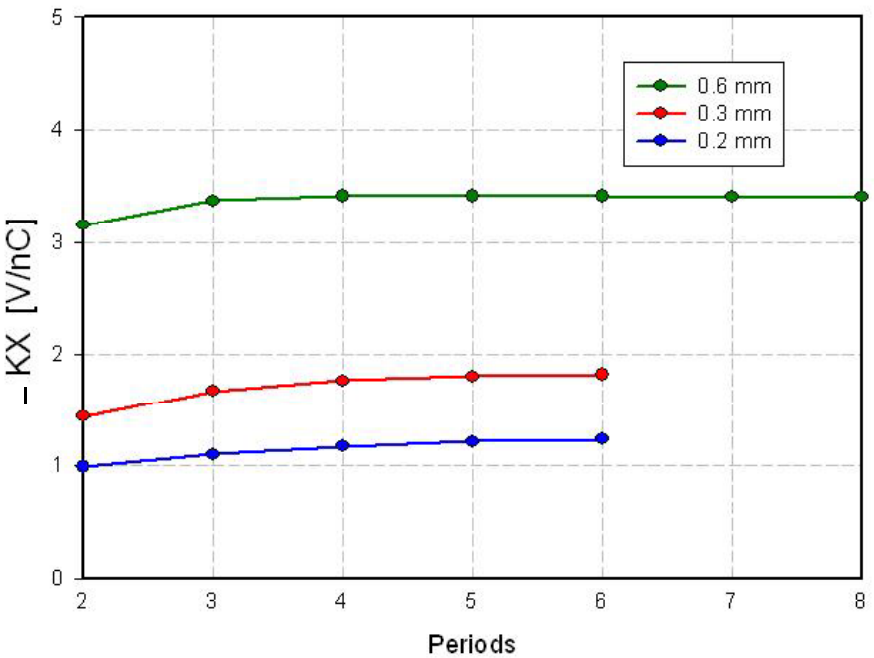

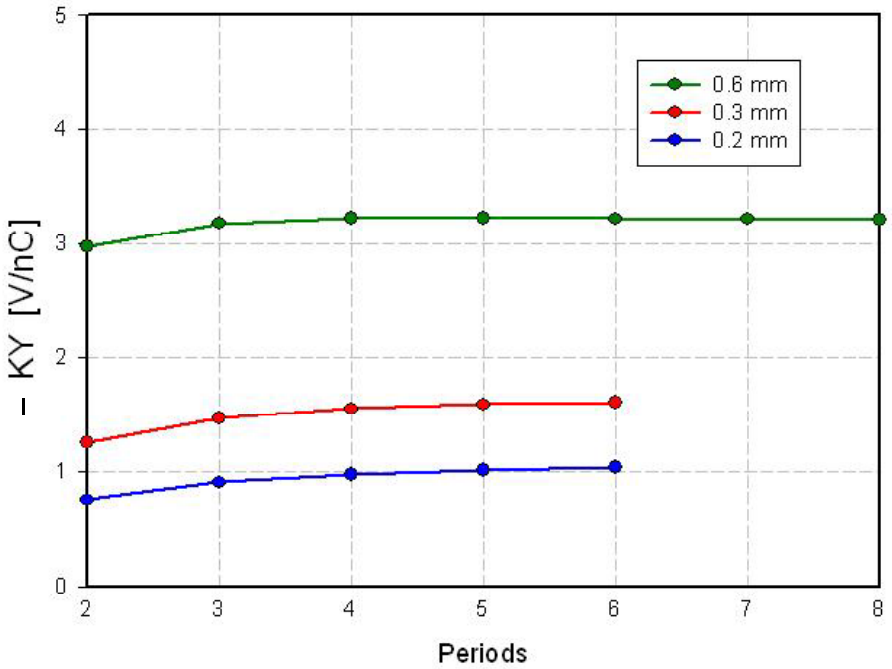

Horizontal (a) and vertical (b) kick per period after the different number of periods for σ = 0.2 mm (blue), 0.3 mm (red), and 0.6 mm (green).

Note, that $k_x, k_y < 0$ (GdfidL gives not $k_\perp$, but $-k_\perp$!).

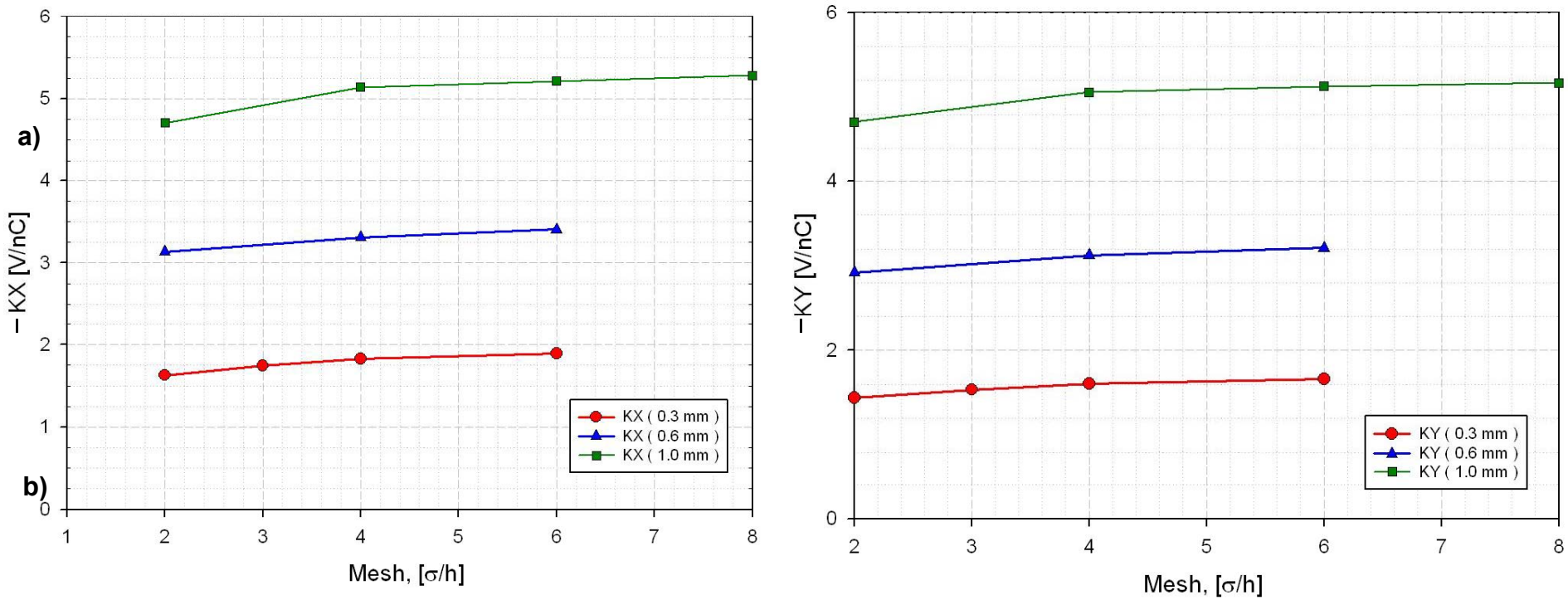

Horizontal (a) and vertical (b) kick per period versus the mesh size for σ = 0.3 mm (blue), 0.6 mm (red), and 1.0 mm (green).

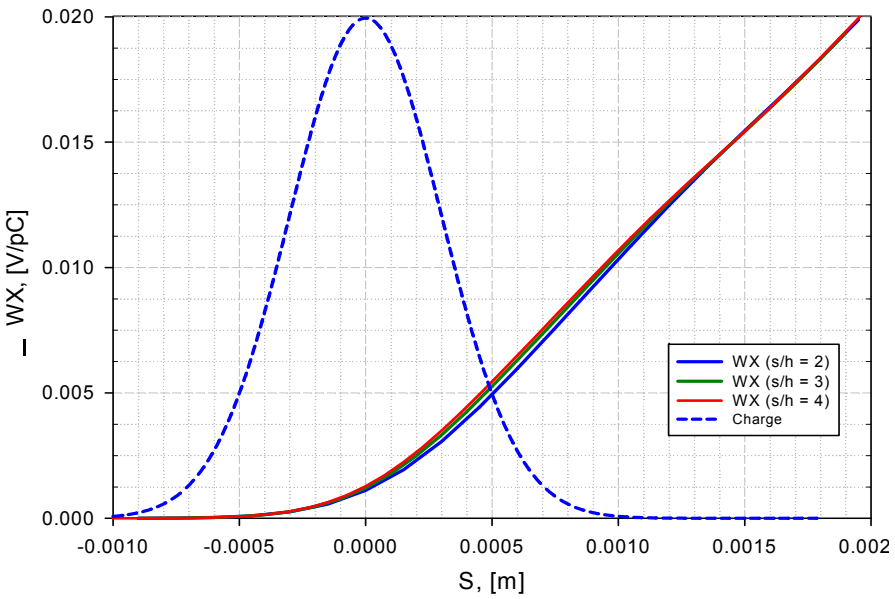

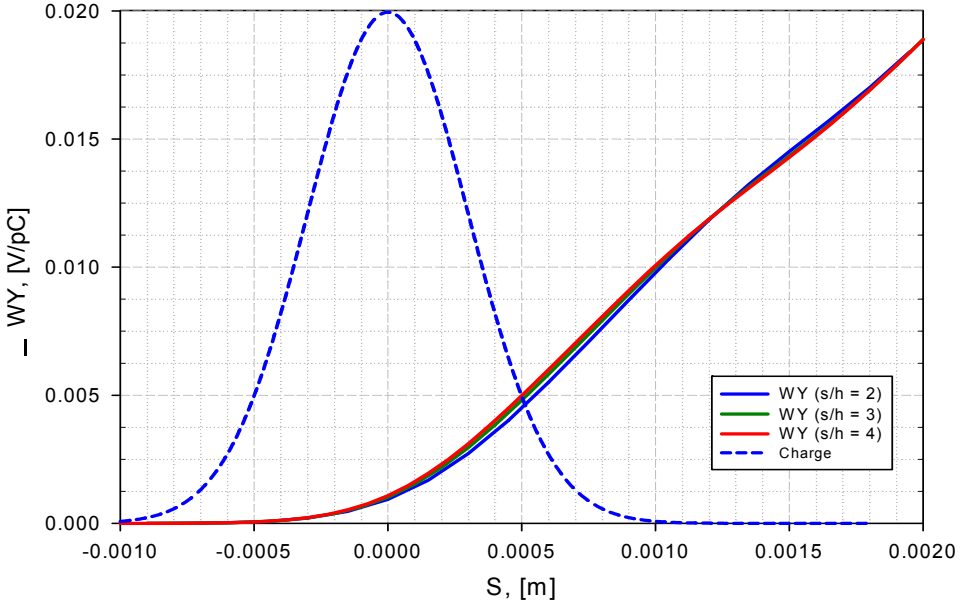

The wake field wake dependence on the longitudinal coordinate *s* for different mesh size for σ =0.3 mm.

$dW_y/ds<0$.

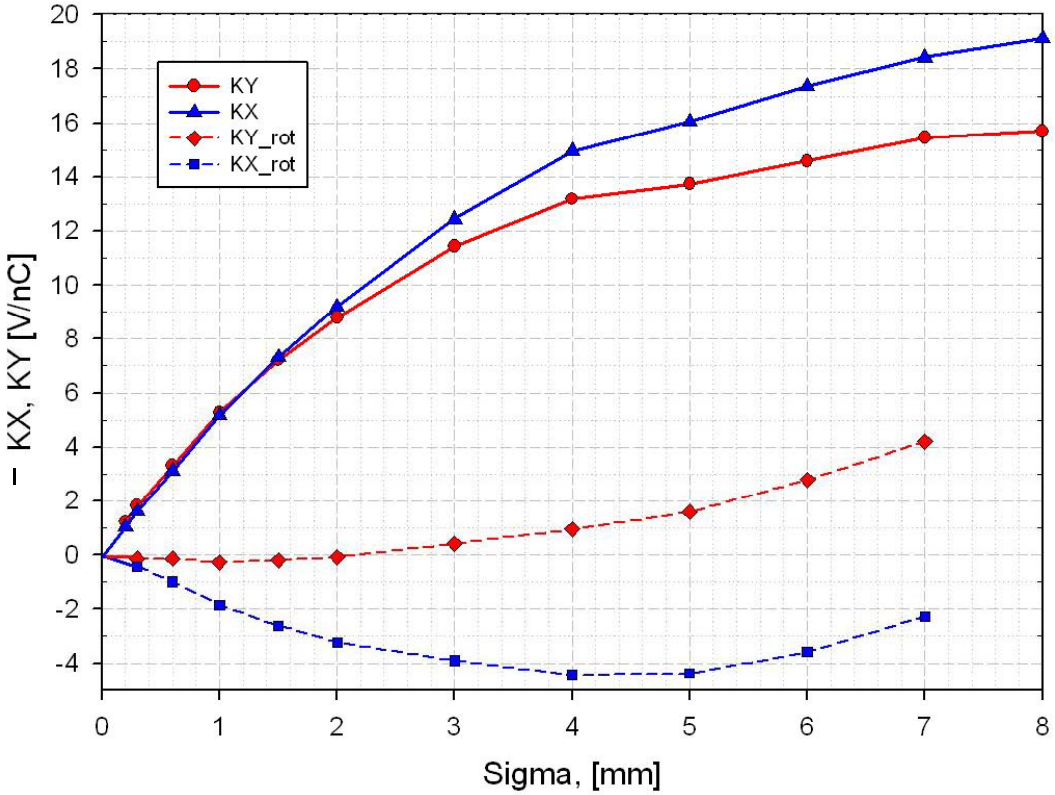

The horizontal (solid blue) and vertical (solid red) kick dependence versus the bunch length σ. Dashed curves show the kick dependences for the upstream coupler rotated by 180º versus the axis.

Kick factor (σ=0.3 mm)	FNAL (GdfidL)	DESY (ECHO*)	TEMPF (PBCI**)
k_x, V/nC	-1.8	-2.7	-2.3
k_y, V/nC	-1.7	-2.3	-2.0

*convergence was not checked. **no information about convergence

Influence of the coaxial line:

1

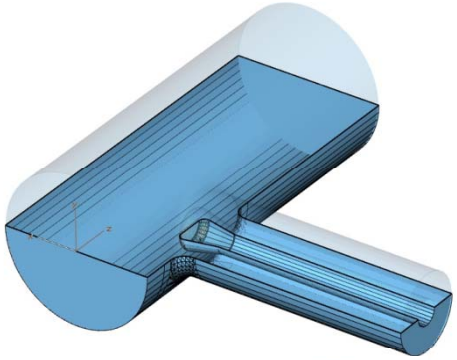

2

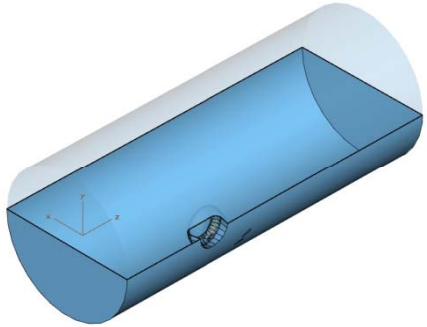

3

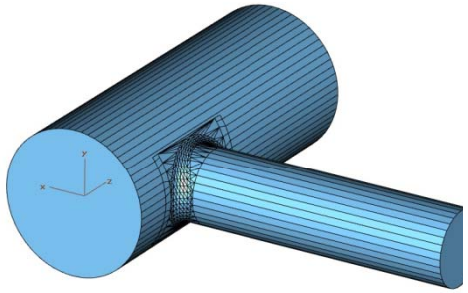

4

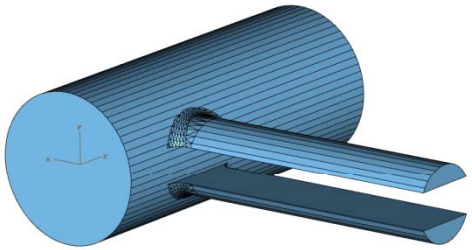

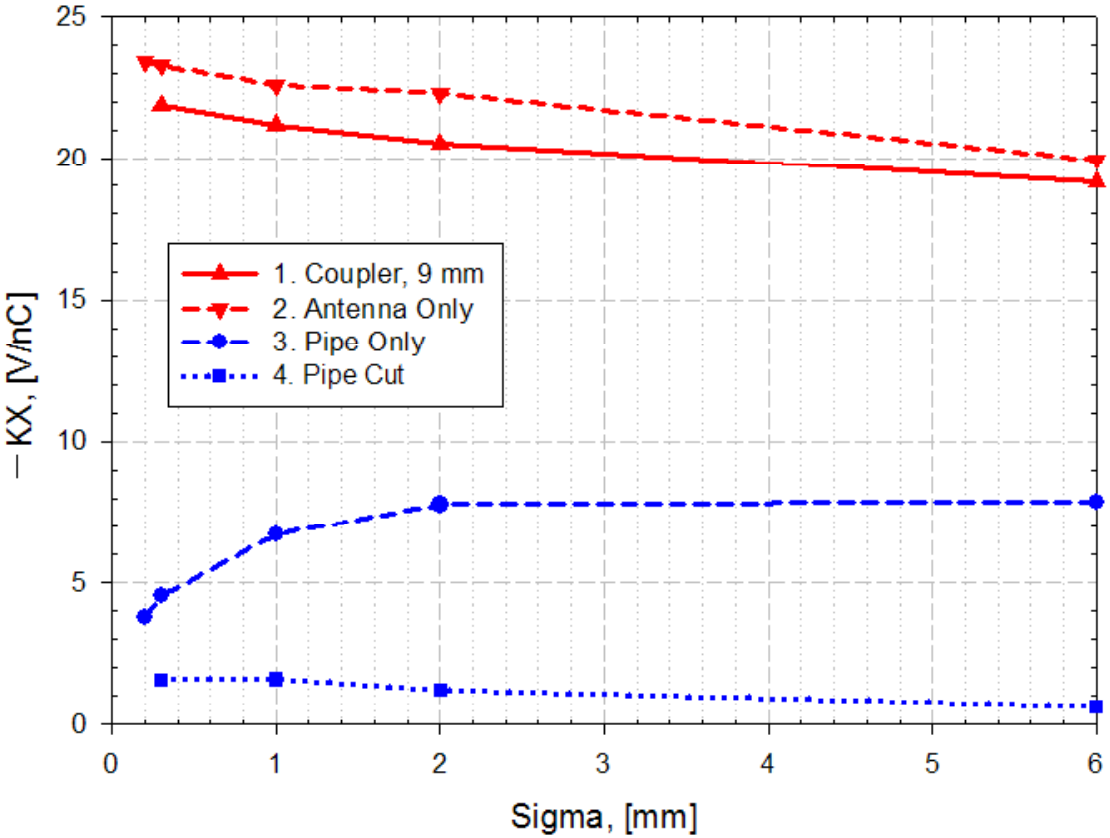

✓The coupler gives almost the same kick as antenna without coaxial line (pipe);

✓Pipe gives smaller kick than the coupler but the same sign. It has diffractive nature (noted by *K. Bane)*;

✓The wake form the pipe is shielded by antenna.

What is important for the emittance dilution:

Simple model, β = const along the linac.

$$\frac{dP_y}{dt} = F_{focus} + F_{kick},$$

$$F_{kick} = G\left(\mathrm{Re}\left(\frac{V_y}{V_z}e^{iks+i\varphi}\right)\right) + QW_y(0,0,s) \approx G\left(\mathrm{Re}\left(\frac{V_y}{V_z}e^{i\varphi}\right)\cos(ks) - \mathrm{Im}\left(\frac{V_y}{V_z}e^{i\varphi}\right)ks\right)$$

$$+QW_y(0,0,0) + QW_y^{'}s \approx \left[G\,\mathrm{Re}\left(\frac{V_y}{V_z}e^{i\varphi}\right) + QW_y(0,0,0)\right] + \left[Q\partial W_y/\partial s - k\,\mathrm{Im}\left(\frac{V_y}{V_z}e^{i\varphi}\right)\right]s \equiv$$

$$\equiv F_0 + sF',$$

where G is acceleration gradient, V_y/V_z is RF kick, $k=2\pi/\lambda_{RF}$, λ_{RF} is RF wavelength, φ is RF phase, Q is the drive bunch charge, W_y is vertical wake potential per unit length, s is the distance from the bunch center, $s \ll \lambda_{RF}$. Note that $\partial W_y/\partial s$ does not depend σ on for small σ.

- The first term is responsible for force that acts on the bunch particles the same way, and, thus, may be compensated using the beam alignment technique (if this term is small enough – *A. Latina*).
- The second term is responsible for the kick different for the different parts of the bunch and, thus, cannot be compensated.

$$\frac{\partial^2 y}{\partial z^2}+\frac{1}{\gamma(z)}\cdot\frac{\partial\gamma(z)}{\partial z}\cdot\frac{\partial y}{\partial z}+\frac{y}{\beta^2}=\frac{F's\gamma(0)}{U_0\gamma(z)},$$

$$\varepsilon\approx\varepsilon_0+\frac{(F')^2\sigma^2\beta^3\gamma_0}{2U_0^2}\left(1-2\sqrt{\frac{\gamma_0}{\gamma(z)}}\cos(z/\beta)+\frac{\gamma_0}{\gamma(z)}\right).$$

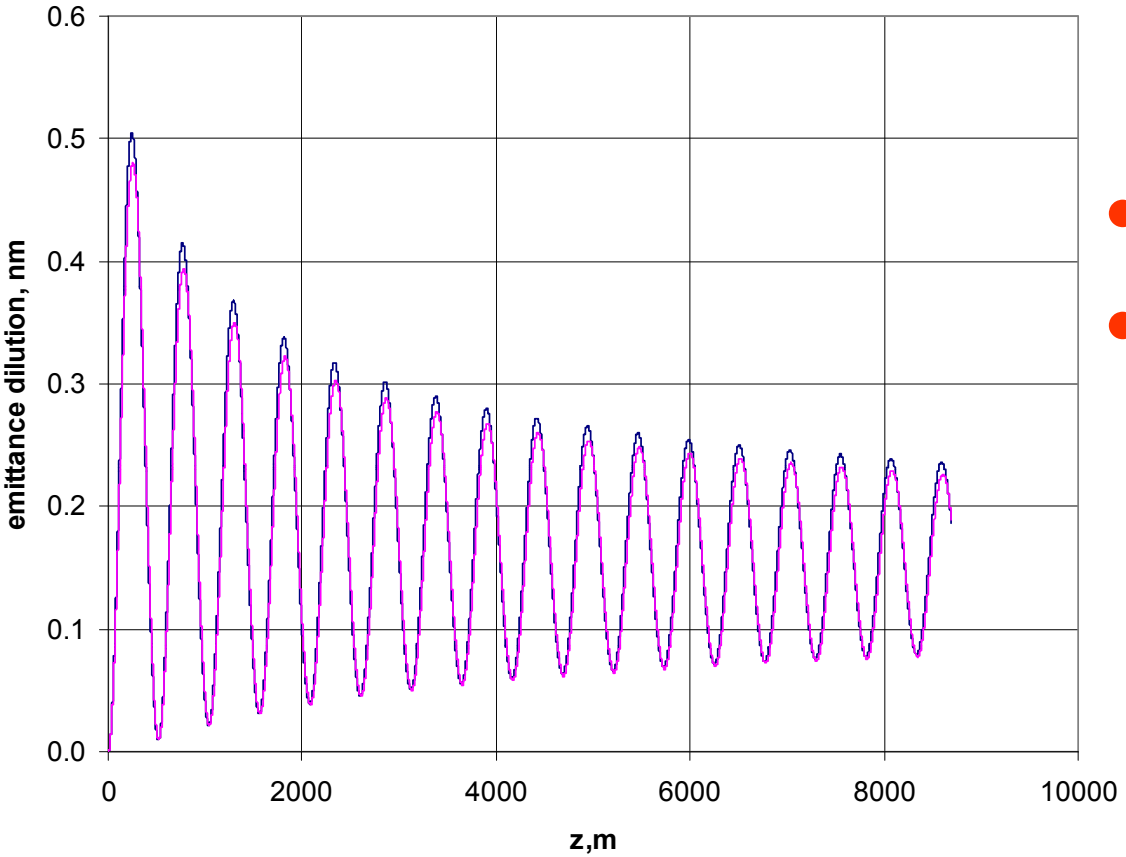

Emittance change vs. *z* calculated numerically (red) and analytically (blue).

$$\Delta\varepsilon\sim\left[Q\partial W_y/\partial s-k\,\mathrm{Im}\left(\frac{V_y}{V_z}e^{i\varphi}\right)\right]^2\sigma^2,$$

- $\partial W_y/\partial s<0,$
- $-k\,\mathrm{Im}\left(\frac{V_y}{V_z}e^{i\varphi}\right)<0.$

For ML φ=-5°.

- No compensation*.
- Emittance dilution is higher for longer bunch.
- For BC it may be a problem.

*Noted also by K. Bane.

A new idea of a compact detachable coupler unit* that provides axial symmetry of the RF field and the cavity geometry in the beam channel:

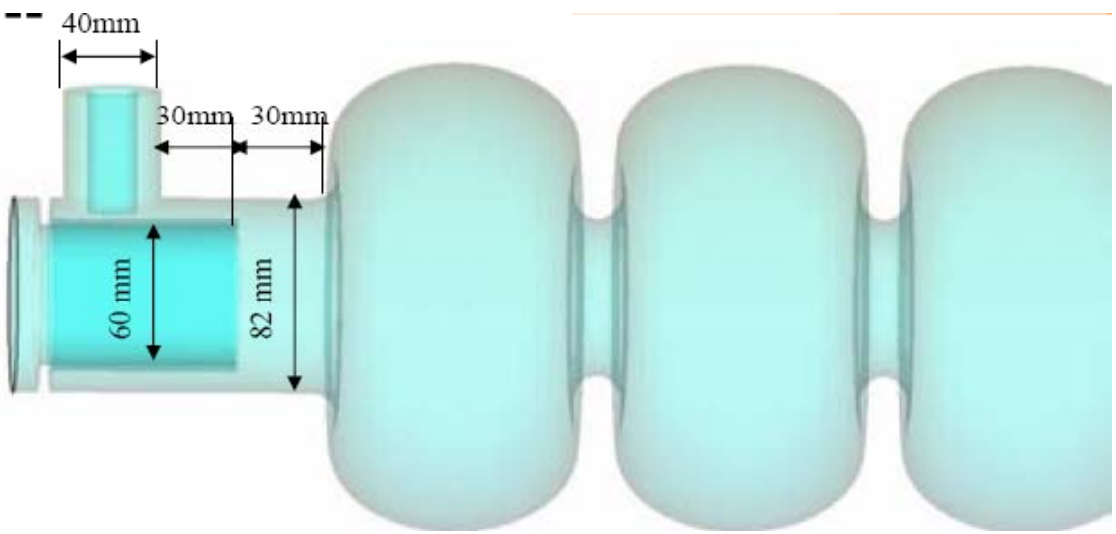

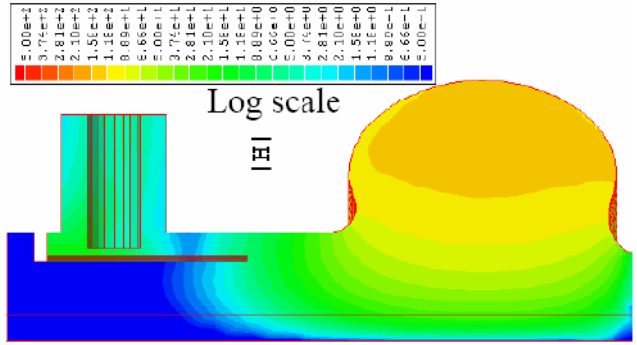

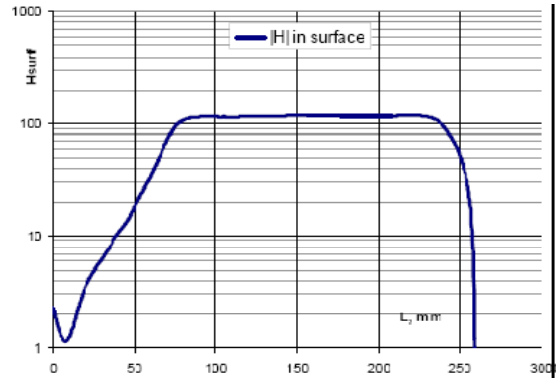

- The unit provides both required coupling of the operating mode and suppression of the HOMs;

- Simulations show that it is free of multipacting.

*N. Solyak, T. Khabiboulline, 2d ILC Workshop, Snowmass, Aug 14-18, 2005

An idea of a compact detachable quarter wave coupler unit that provides axial symmetry of the RF field and the cavity geometry in the beam channel:

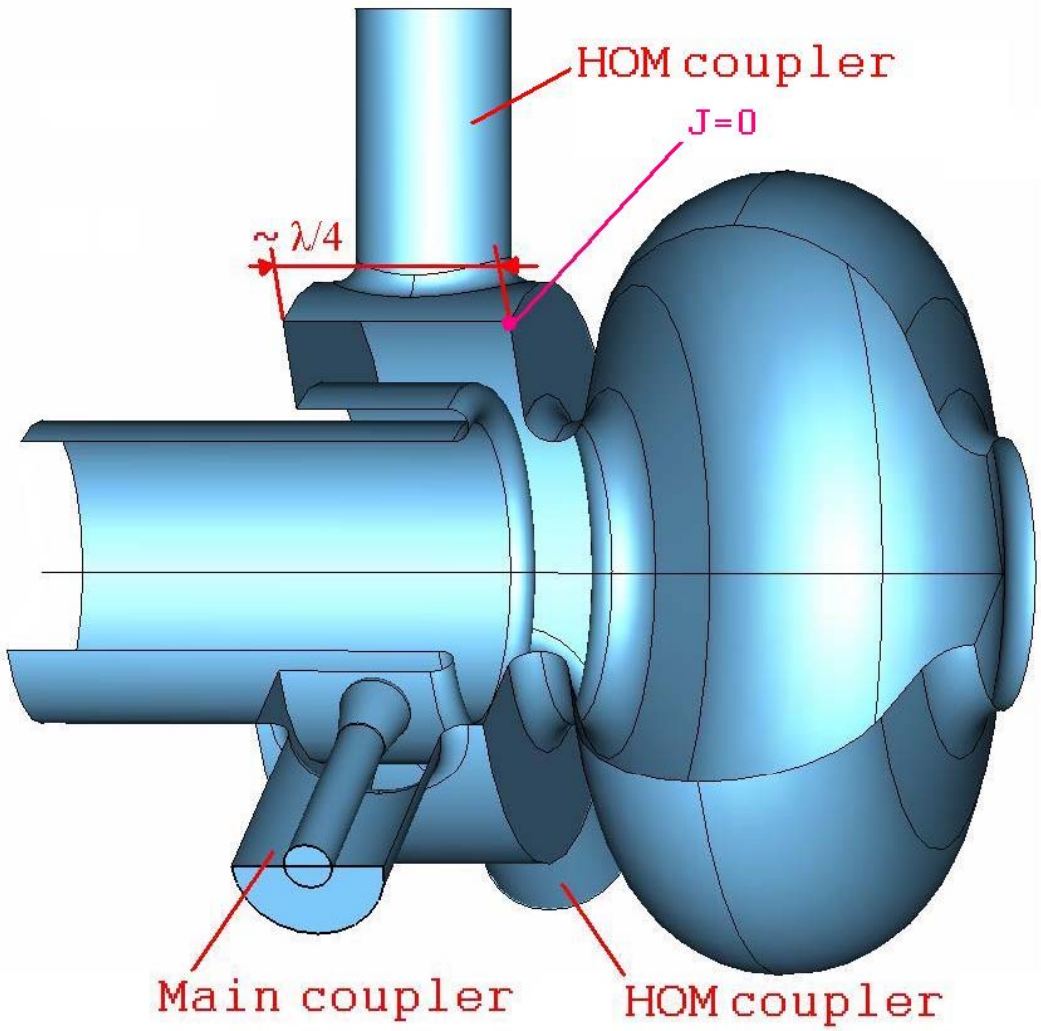

Summary

- The RF kick and coupler wake do not compensate each other.
- The emittance dilution is proportional roughly to the bunch length squared. If it is not a problem for ML, it could be a problem for BC.
- An alternative axi-symmetrical couplers may be necessary.
- The authors thank Karl Bane for very fruitful discussions.