Machine detector Interface summary

Stewart Boogert
John Adams Institute (Royal Holloway)
on behalf of
MDI conveners : K. Busser, T. Markiewicz, T. Ormori, T. Tauchi, A. Seryi
LCWS 2008, UIC Forum, Chicago

LCWS MDI overview

- 7 sessions in total
  - 3 joint with Beam delivery system
  - 2 joint with detector concepts and BDS (lively discussions)
  - 1 joint with Gamma-gamma (renewed interest)
  - 1 independent session
- Main focus of discussion was interfaces...
- Not discussing
  - Photon collider (not MDI focused discussion)
  - Low angle detector diagnostics (lots of good work going on here)

Machine detector interface

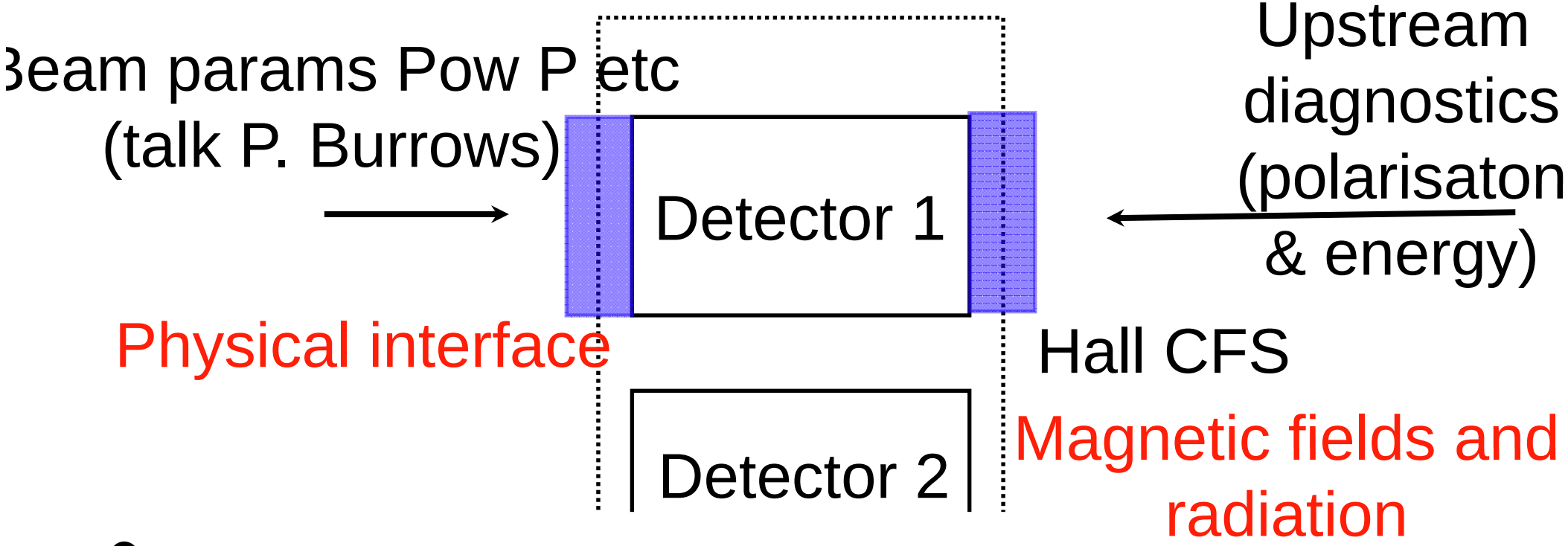

- Many physical and conceptual interfaces
  - On and off accelerator detector
  - Machine detector physical interface
- Diagnostics
- Machine parameters

MDI key issues

- Letter of Intent deadline imminent
  - MDI interface document
    - Interface to machine
    - Discussed scope
  - Detector push-pull
    - Physical interface to machine
    - Bilateral detector agreements
  - QD0 out of detector volume (pay in luminosity)
  - Both doublet magnets in detector (wider detector hall?)
  - Split between doublet (current RDR)
    - Stability of final doublet

Detector interfaces

T. Markiewicz, B. Parker

- IRENG07 workshop
- EPAC08 paper
  - Functional requirements
- Final doublet
- Vacuum, stray fields, supports, services, push-pull time
- Self shielding
- Pacman shielding

MOPP031 Proceedings of EPAC08, Genoa, Italy

CHALLENGES AND CONCEPTS FOR DESIGN OF AN INTERACTION REGION WITH PUSH-PULL ARRANGEMENT OF DETECTORS – AN INTERFACE DOCUMENT*

B.Parker (BNL), A.Herve, J.Osborne (CERN), A.Mikhailichenko (Cornell Univ.), K.Buesser (DESY), B.Ashmanskas, V.Kuchler, N.Mokhov (Fermilab), A.Enomoto, Y.Sugamoto, T.Tauchi, K.Tsuchiya (KEK), J.Weisend (NSF), P.Burrows (Oxford Univ.), T.Markiewicz, M.Oriunno, A.Seryi, M.Sullivan (SLAC), D.Angal-Kalinin (STFC), T.Sanuki, H.Yamamoto (Tohoku Univ.)

Abstract

Two experimental detectors working in a push-pull mode has been considered for the Interaction Region of the International Linear Collider (ILC). The push-pull mode of operation sets specific requirements and challenges for many systems of detector and machine, in particular for the IR magnets, for the cryogenics and alignment system for beamline shielding, for detector design and overall integration, and so on. These challenges and the identified conceptual solutions discussed in the paper intend to form

The goal of push-pull operation is the first defining assumption. We set as the goal that hardware design should allow the moving operations, reconnections and possible rearrangements of shielding to be performed in a few days, or less than a week.

The range of detector sizes considered in the design include detectors with half size of 6-7 meters, performing optimally if the IP to start of QD0 quadrupole (L* parameter) would be in the range of 3.5-4.5 meters

ILC-Note-2008-nnn
December 2008
Version 0, 2008-12-16

Functional Requirements on the Design of the Detectors and the Interaction Region of an e^+e^- Linear Collider with a Push-Pull Arrangement of Detectors

B.Parker (BNL), A.Mikhailichenko (Cornell Univ.), K.Buesser (DESY), B.Ashmanskas (Fermilab), T.Tauchi (KEK), P.Burrows (Oxford Univ.), T.Markiewicz, M.Oriunno, A.Seryi (SLAC)

ILD concept

T. Tauchi

- Interlocking Pacman shielding
  - Two options, depending on the movability of QF0
  - A & C moved by crane and airpads
  - Cantilevered support of QD0 and QF0

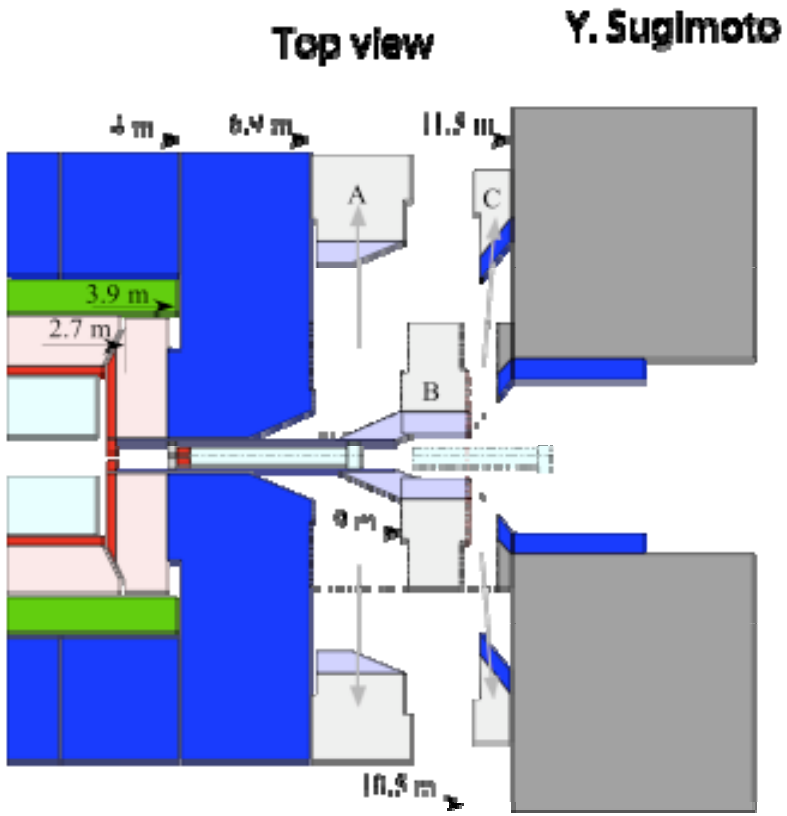

Study of deflection and vibration Yamaoka

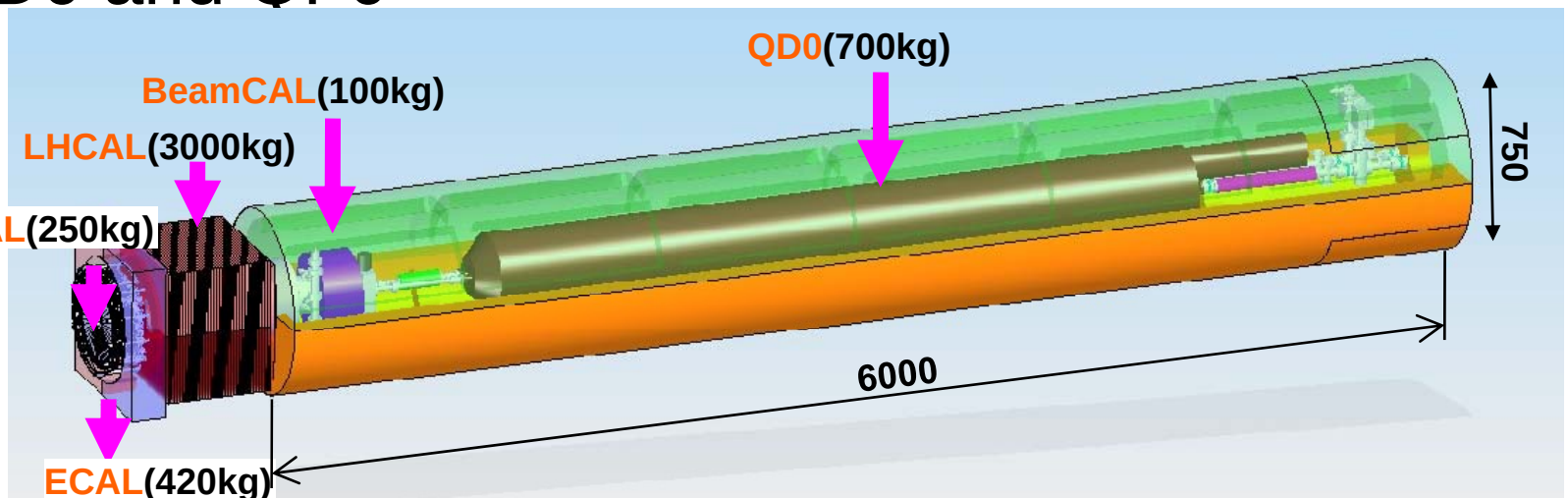

SiD concept

M. Oriunno

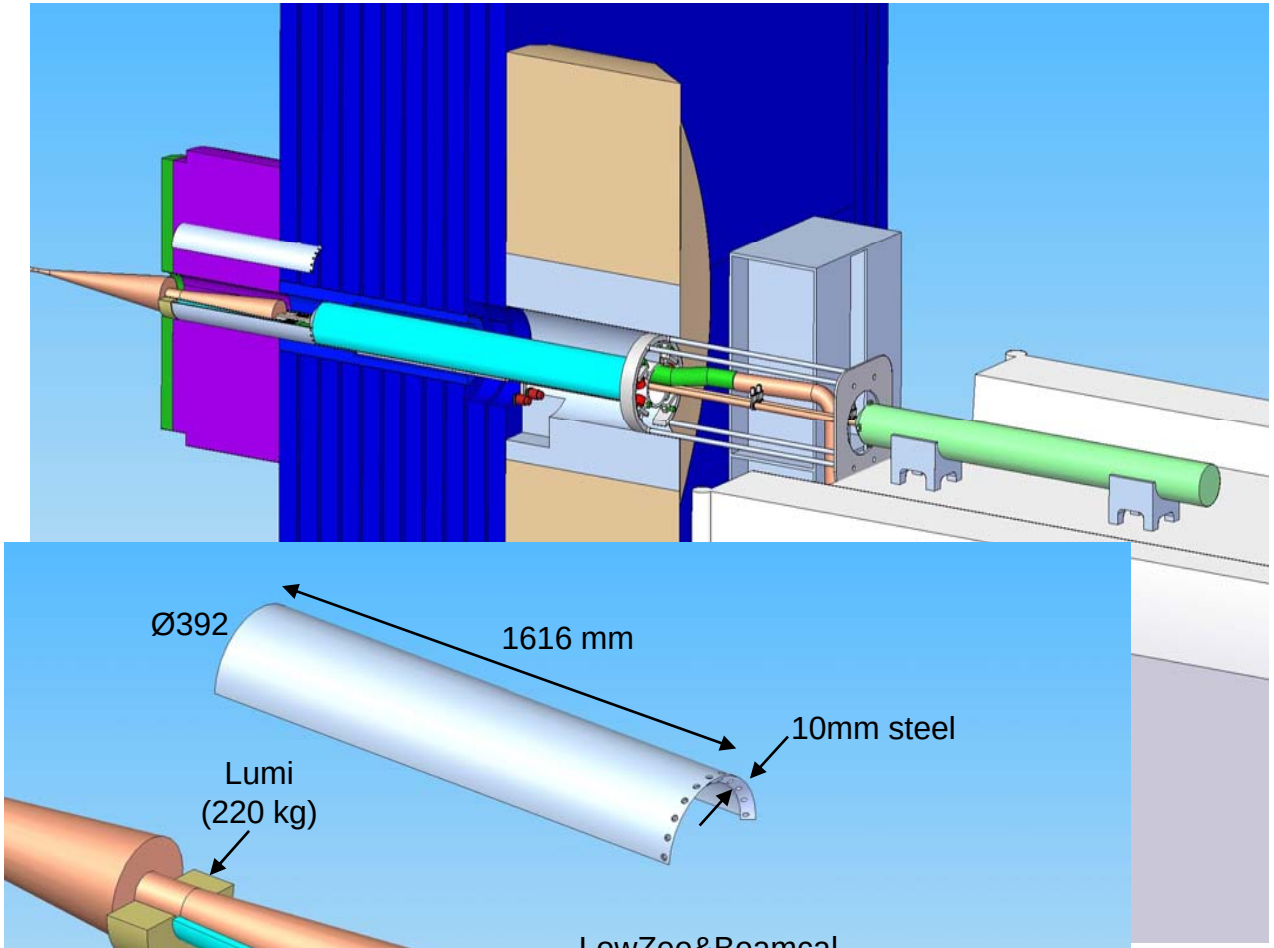

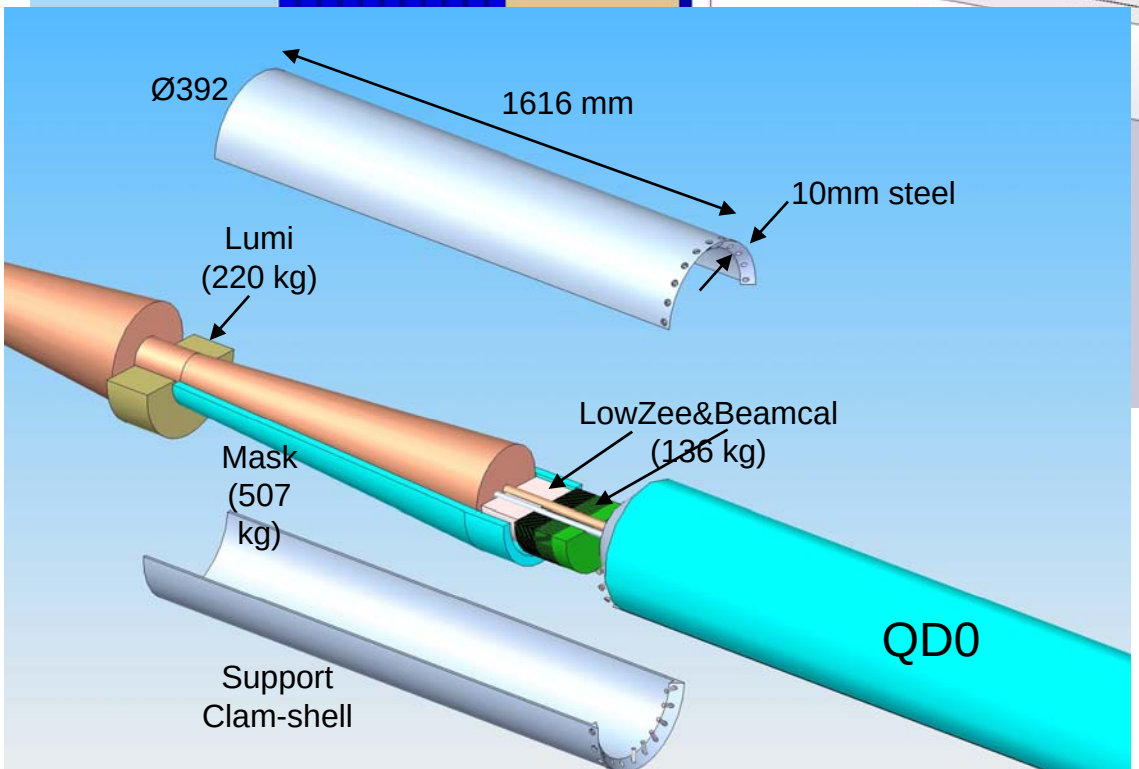

- Focus of IDAG questions to be addressed in LOI
- Integration studies of ancillaries
  - cryo-lines
  - Hinged pacman shielding from above
- Platform design and stability

4th detector concept

A. Mikhailichenko

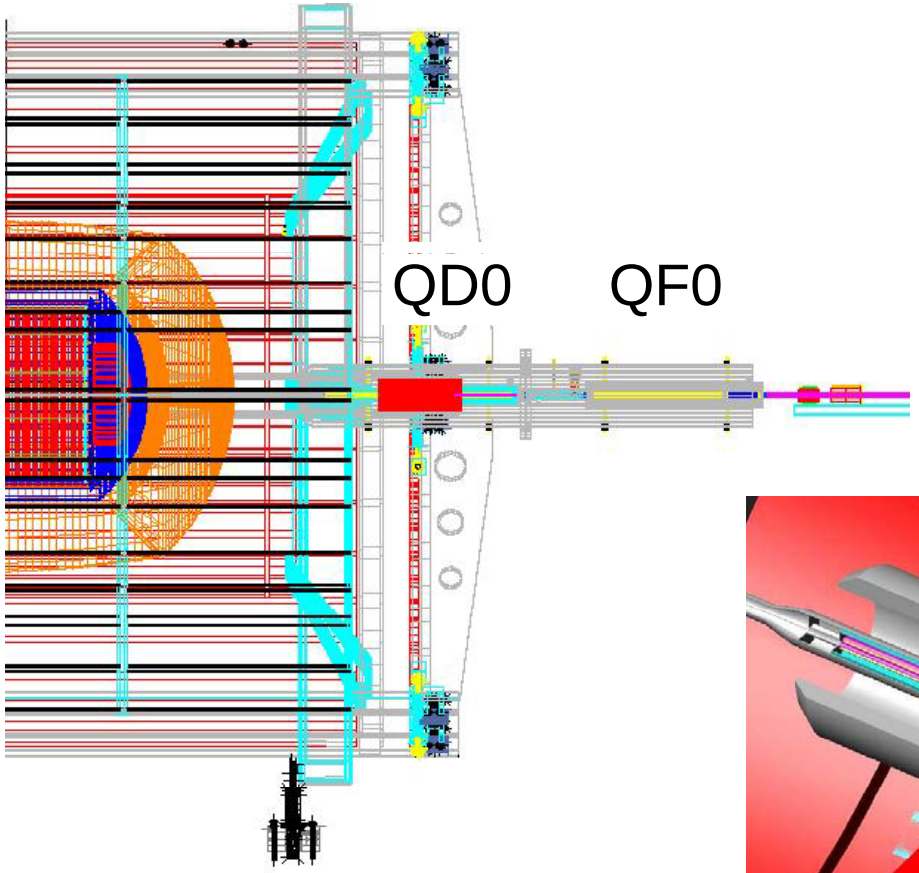

- Simple scheme to disconnect QD0 and QF0
- Separate shielding.

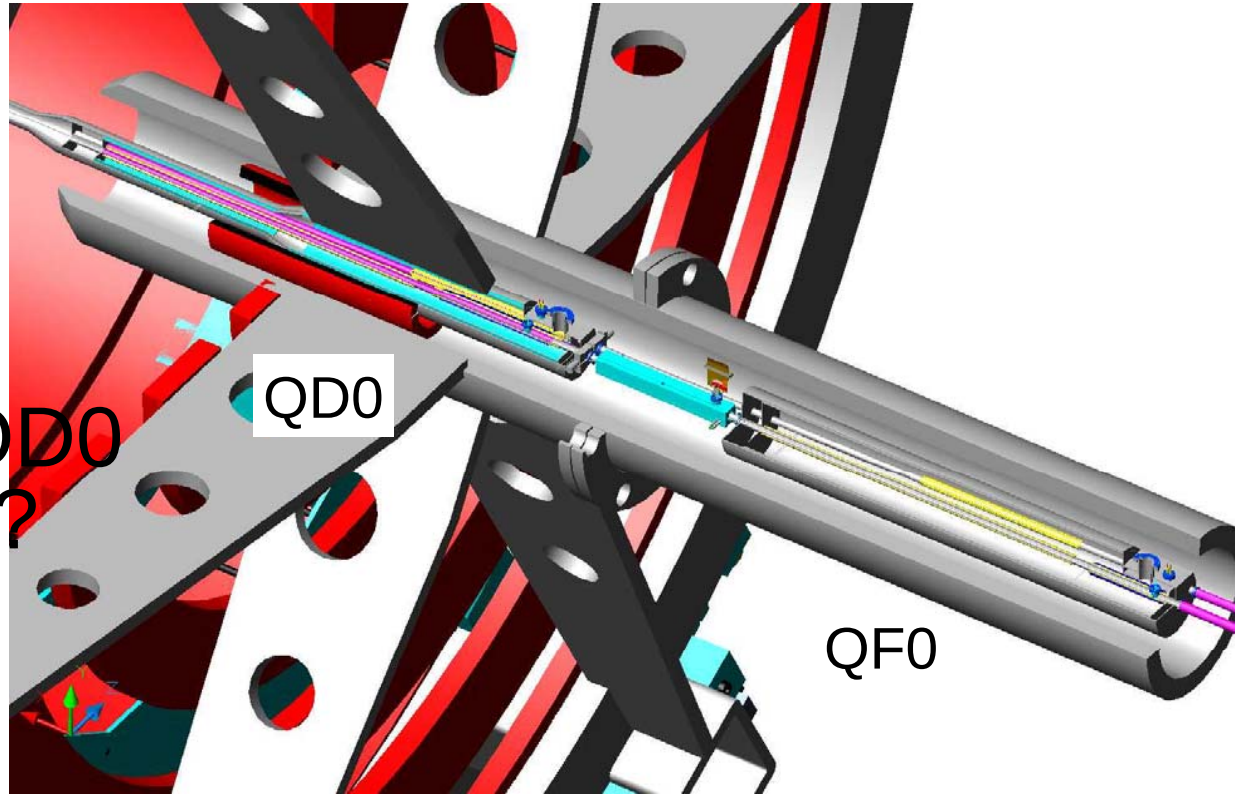

- Allow movement of QD0 and QF0 with detector?

Stray fields

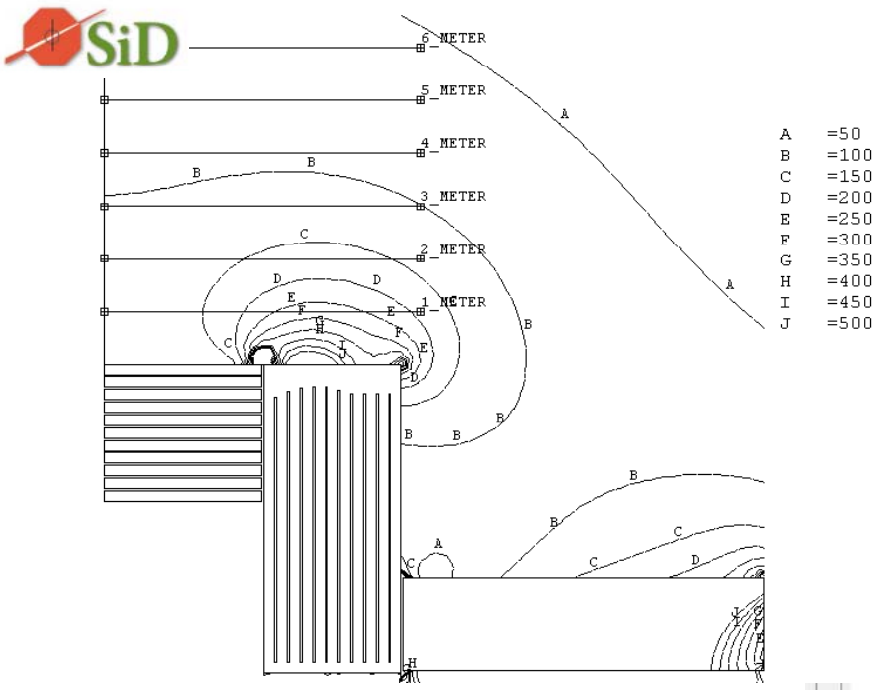

- Stray fields from solenoidal detector fields
  - Impact on other detector
    - Working conditions
    - Physics performance

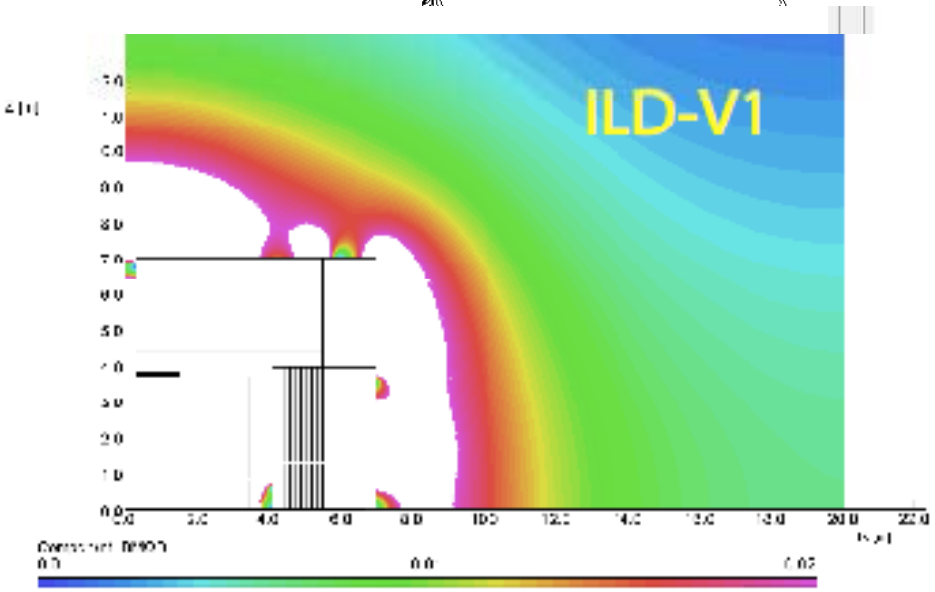

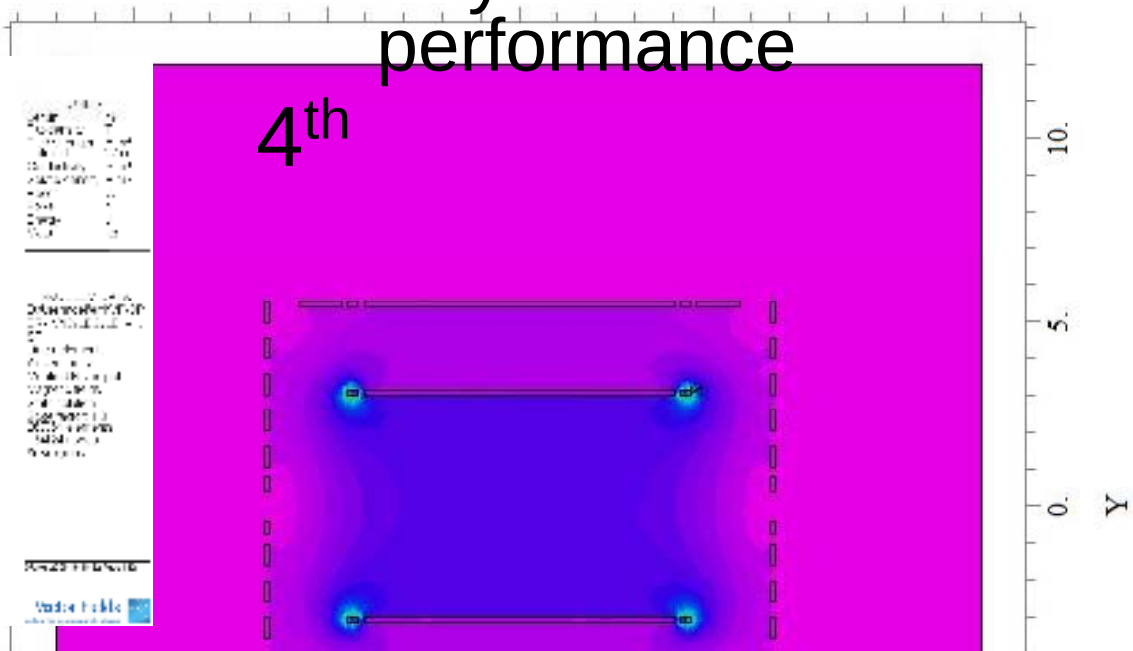

QD0 Stabilisation

D. Urner

- Fixed frequency interferometry (FFI) distance meters (10 kHz)
- QD0 integration into detector

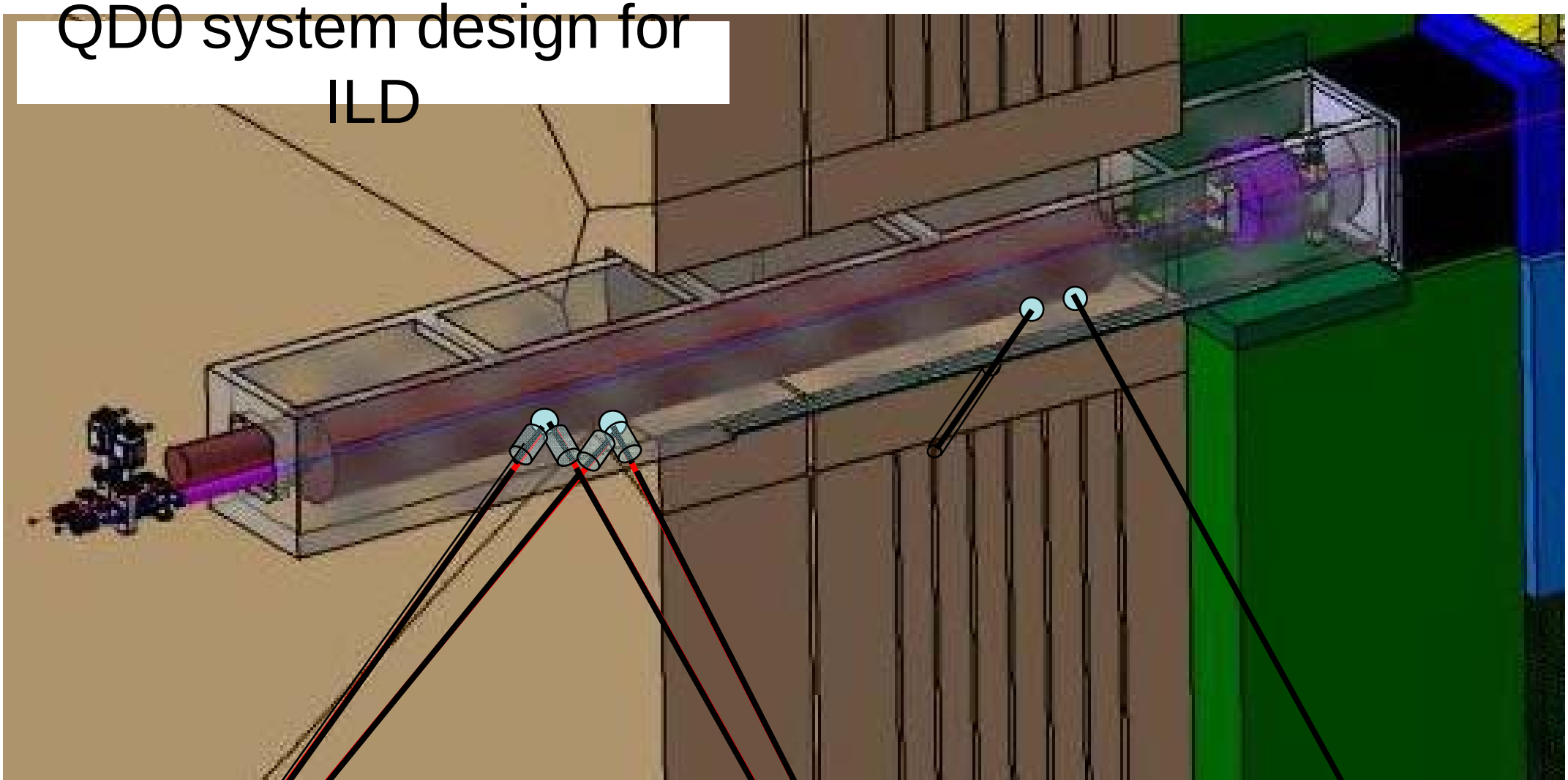

Push-pull points

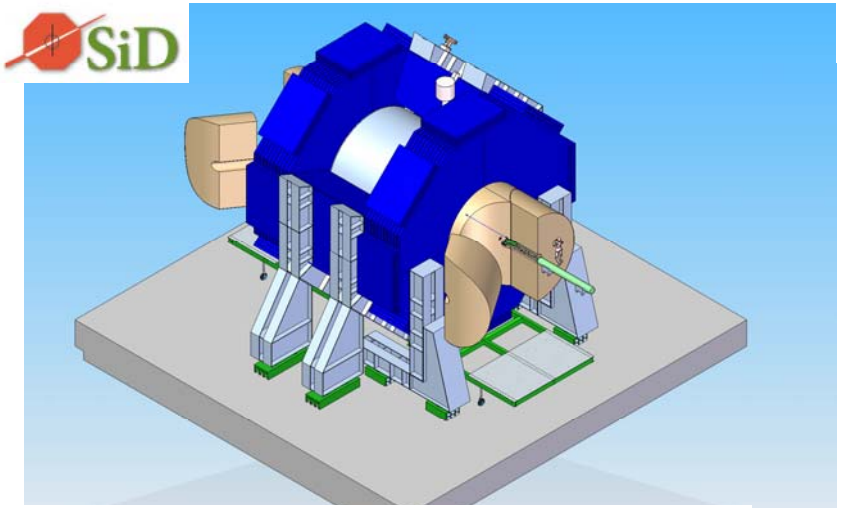

Modal analysis (first 20 mode extracted)

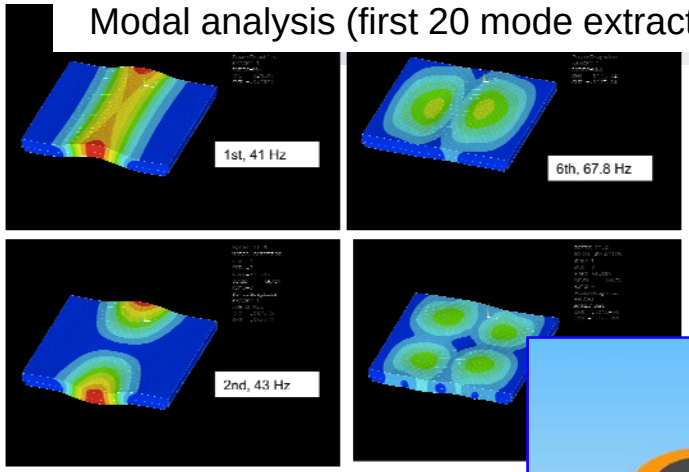

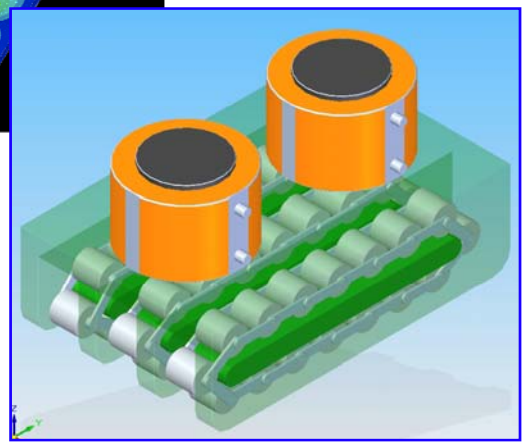

- Detector platforms
  - Rollers
  - Airpads
- Return detector (QD0) to within ~1mm
- Study of platform
  - Study from SiD of platform stability
- Push-pull time estimates
  - 1 day ~ 1 week

Upstream diagnostics

C. Rimbault

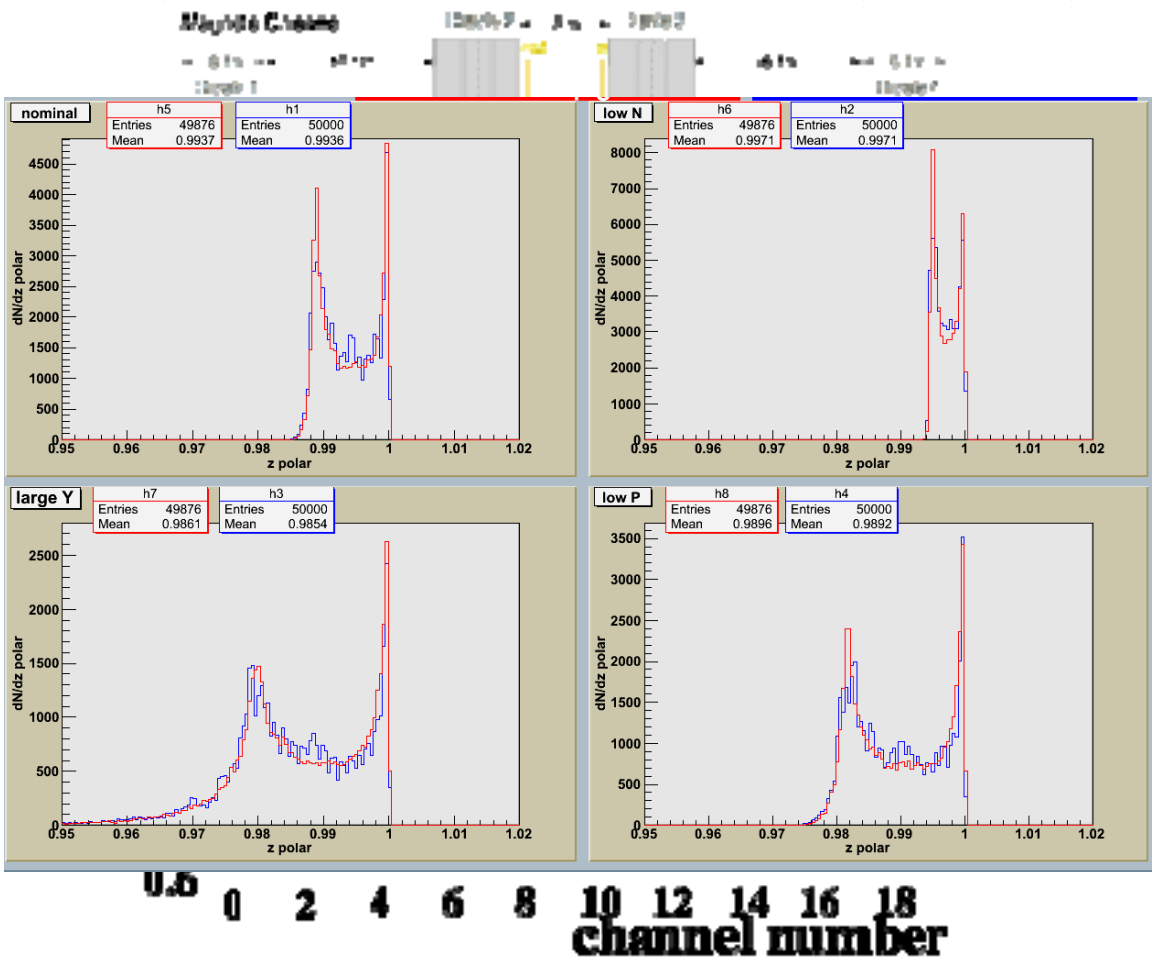

- Polarisation/polarimeters
- Lots of progress on design and layout
  - Clash with emittance diagnostics
- Depolarising effects and spin transport
- Effect of machine parameters (e.g LowP)

Machine parameters (Low P)

A. Servi

Increased pair background

	Nom. RDR	Low P RDR	new Low P	new Low P	new Low P	new Low P
Case ID	1	2	3	30	4	5
			500	500	500	500
			2.0E+10	2.0E+10	2.0E+10	2.0E+10
			1320	1320	**1105**	1320
			5	5	5	5
σ_z (m)	3.0E-04	2.				
Guinea-Pig ™E/E	**0.023**					
Guinea-Pig L [cm^{-2}s^{-1}]	2.02E+34	1.38E+34	1.92E+34	1.98E+34	2.00E+34	2.02E+34
Guinea-Pig Lumi in 1%	1.50E+34	1.09E+34	1.18E+34	1.17E+34	1.06E+34	1.24E+34

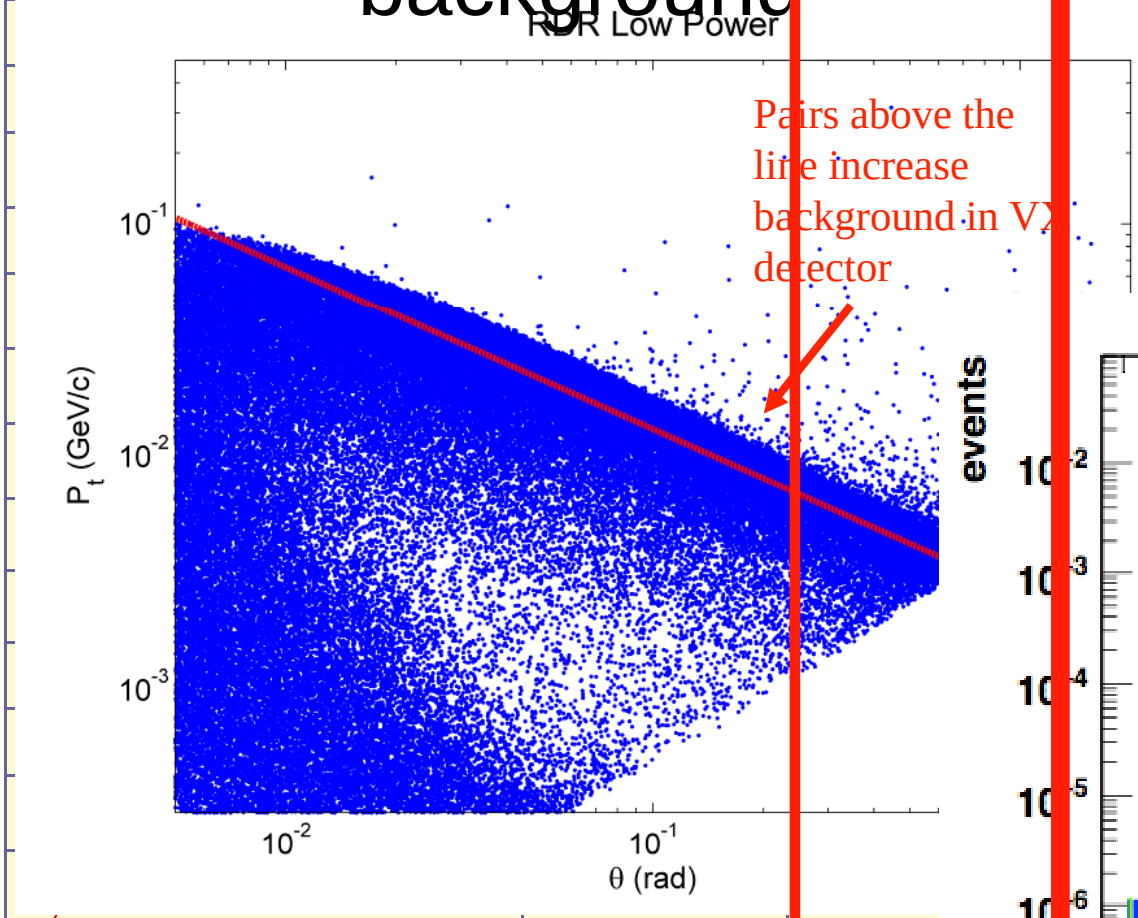

Increased energy loss

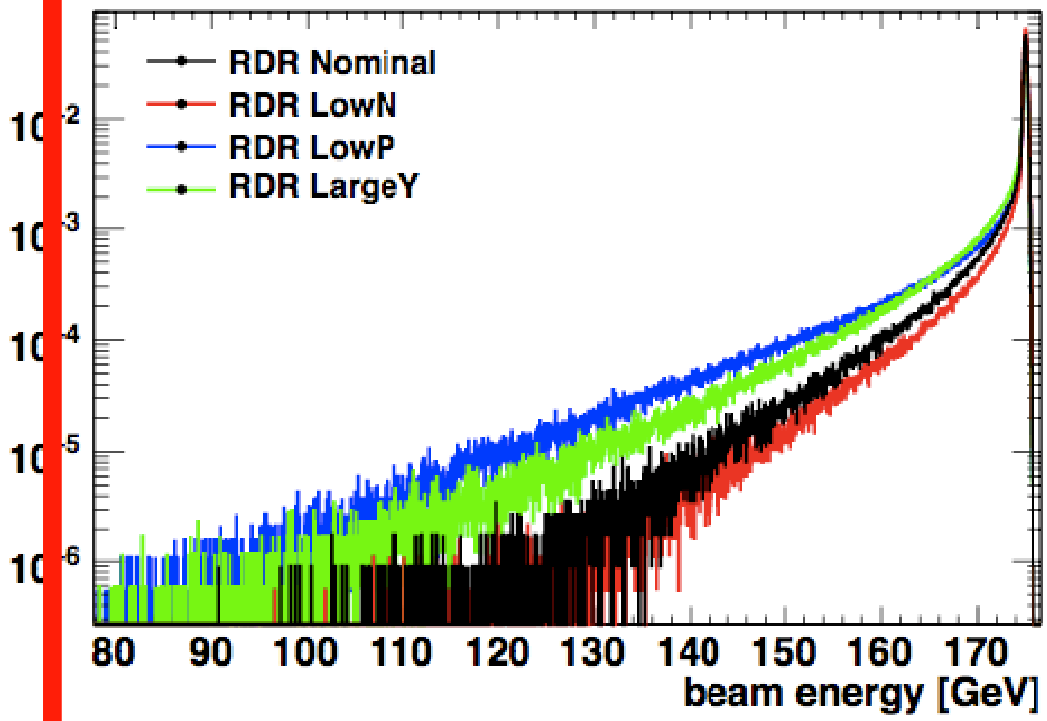

Travelling focus can mitigate the increased beamstrahlun

Summary

- Significant progress since IRENG07 & ECFA08
  - Interface document in preparation
    - Understand what interfaces are required and when
  - Lots of work before LOI submission
    - Yamada-sensei in discussion“good progress, detailed technical discussion is a good start but validation process not dependent on MDI functional requirements”
  - Options (low P and minimal machine) need to be propagated to detector (& upstream diagnostics)
- Fruitful discussion here in Chicago