WBS x.2 - Global Systems

John Carwardine (Argonne)
Ray Larsen (SLAC)

Outline

- Scope and themes of WBS x.2
- FY06/07 accomplishments
  - 2.y - Design (RDR support)
  - 3.y - R&D
  - 5.y - Facilities
- FY08/09 program
  - Goals, motivation
  - 2.y Design
  - 3.y - R&D
  - 5.y Facilities

Scope of WBS x.2

- Six topics with 'global' reach
  - Commissioning/Ops (includes availability simulations, global topics)
  - Controls, Instrumentation, LLRF
  - Installation, Survey & Alignment

- Common themes
  - High Availability
  - Electronic systems (hardware, firmware, software)
  - Installation, manufacturing considerations
  - Technical systems for ILC Test Facilities

- In FY08/09, six topics will be managed under single umbrella.
- FY08/09 budget planning has both ILC and SRF budget lines.

Americas

ART x.2 WPs in FY06/07

	A	B	C	D	E	F	G	H	I
1									
2						FY06		FY07	
3		FY06 WP	FY07 WP		Lab	FTEs	M&S K$	FTEs	M&S K$
4		2.y Accelerator Design				1.5		3.9	38
5		2.2.1	2.2.1	Global systems design	SLAC	1.2		0.9	
6		2.2.2	2.2.2	Control System design	SLAC	0.3		0.3	
7			2.2.3	Control System design	ANL			0.9	13
8			2.2.4	Installation	SLAC			1.9	25
9									
10		3.y R&D				1.5	179	3.4	858
11		3.2.1	3.2.1	High availability power supplies	SLAC	1.2	23	1.5	560
12		3.2.3	3.2.3	Diagnostic Processor for power supply	SLAC		21	1.4	40
13			3.2.3.1	Diagnostic Processor for power supply	ANL			0.2	33
14		3.2.4	3.2.4	High availabilty control system & standard instr. Modules	SLAC		118		192
15			3.2.4.2	High Availability Standard Modules for Instrumentation Systems	ANL			0.4	18
16		3.10.10	3.10.10	Nanometer resolution BPM system	LLNL	0.3	17	0.1	15
17									
18		5.y Facilities				4.6	390	1.5	78
19		5.8.4	5.2.1.1	LLRF Controls	FNAL	1.9	135		
20			5.2.1.2	FNAL Test facility Instrumentation and LLRF Controls Collaboration	SLAC			0.2	29
21		3.9.1	5.8.5	Superconducting RF Cavity HOM BPM Project for the TTF VUV-FEL	SLAC	1.1	124	0.5	15
22		3.10.2	5.10.4	ATF2 Cavity BPM Electronics	SLAC	1.6	131	0.4	34
23			5.10.6	ATF2 S-band and IP Cavity BPM	SLAC			0.4	
24									
25					Totals	7.6	569	8.8	974

Not all activities are reflected…

- Work supported with Lab core funds is not fully reflected in the WP list. These include:
  - Significant effort on RDR & costing exercises, including Controls, Instrumentation, LLRF.
  - Additional R&D tasks on Instrumentation and LLRF.
  - Scope of work on test facilities (eg ILCTA).

x.2 Contributions to RDR

- Major contributions to RDR, eg chapters on:
  - Availability, Commissioning & Operations (SLAC)
  - Controls & Timing (Argonne, FNAL, SLAC)
  - Instrumentation (FNAL, SLAC)
  - Installation (part of CF&S chapter) (SLAC, FNAL)
  - LLRF (FNAL, LBNL)

- International collaborations include DESY, KEK, U. Oxford.

2.2.1 - Global Systems Design

- Reliability studies to assess impact of cost-reduction strategies, including
  - E- and E+ damping rings in a single tunnel.
  - Eliminate hot-spare positron source.
  - Main Linac in a single tunnel (no service tunnel).
- Wrote RDR chapter on Commissioning & Operations.
- Developed budgets for ILC pre-operations and operations phases.
- GDE R&D Board membership, Chair S2 Task Force.

2.2.2, 2.2.3 - Control System Design

- Strong collaborations continue on Controls, LLRF, and Instrumentation.
- Regular Controls and LLRF inter-regional Webex meetings bring participants from ANL, FNAL, SLAC, SNS, LBNL, DESY, KEK, UIUC, IHEP.
- Completed conceptual designs, costing models and cost estimates, RDR descriptions for
  - Global Control System.
  - Timing & phase reference distribution.
  - LLRF systems.
  - Instrumentation systems.
- Beginning EDR planning process.
- ART Global Systems budget planning for FY08/09

2.2.4 Installation

- Description
  - Model tunnel installation for all machine systems except civil infrastructure
  - Develop cost models for labor, materials, specialized handlers, workspace
  - Contribute to RDR development
- Motivation
  - Installation is a major cost element and conceptual models, cost analysis and industrialization needed for RDR, EDR
- Progress in 06-07
  - Completed conceptual models, cost estimates, RDR descriptions
  - Started developing Work Packages for EDR phase

Americas

R&D WPs in FY06/07

	FY06 WP	FY07 WP		Lab	FY06 FTEs	FY06 M&S K$	FY07 FTEs	FY07 M&S K$
	2.y Accelerator Design				**1.5**		**3.9**	**38**
	2.2.1	2.2.1	Global systems design	SLAC	1.2		0.9	
	2.2.2	2.2.2	Control System design	SLAC	0.3		0.3	
		2.2.3	Control System design	ANL			0.9	13
		2.2.4	Installation	SLAC			1.9	25
	3.y R&D				**1.5**	**179**	**3.4**	**858**
	3.2.1	3.2.1	High availability power supplies	SLAC	1.2	23	1.5	560
	3.2.3	3.2.3	Diagnostic Processor for power supply	SLAC		21	1.4	40
		3.2.3.1	Diagnostic Processor for power supply	ANL			0.2	33
	3.2.4	3.2.4	High availabilty control system & standard instr. Modules	SLAC		118		192
		3.2.4.2	High Availability Standard Modules for Instrumentation Systems	ANL			0.4	18
	3.10.10	3.10.10	Nanometer resolution BPM system	LLNL	0.3	17	0.1	15
	5.y Facilities				**4.6**	**390**	**1.5**	**78**
	5.8.4	5.2.1.1	LLRF Controls	FNAL	1.9	135		
		5.2.1.2	FNAL Test facility Instrumentation and LLRF Controls Collaboration	SLAC			0.2	29
	3.9.1	5.8.5	Superconducting RF Cavity HOM BPM Project for the TTF VUV-FEL	SLAC	1.1	124	0.5	15
	3.10.2	5.10.4	ATF2 Cavity BPM Electronics	SLAC	1.6	131	0.4	34
		5.10.6	ATF2 S-band and IP Cavity BPM	SLAC			0.4	
				Totals	**7.6**	**569**	**8.8**	**974**

3.2.1 HA Power Supply Programs

[SLAC, KEK]

- Non-HA Power Supplies a likely chief source of downtime.
- WP goal is to demonstrate the technical and cost viability of an HA design with modular redundancy.

- 3.2.1.1 R&D Program for HA Systems
  - Demonstrate N+1 Prototypes for Uni, Bipolar supplies operating from DC bulk
  - Develop N+1 Redundant Bulks
  - Develop Redundant Controllers

- 3.2.1.2 ATF2 40-unit system
  - Design, build, test 40 Magnet System for ATF2
  - Install at ATF2, document, train KEK personnel.

3.2.1 Progress: HA Dual Control

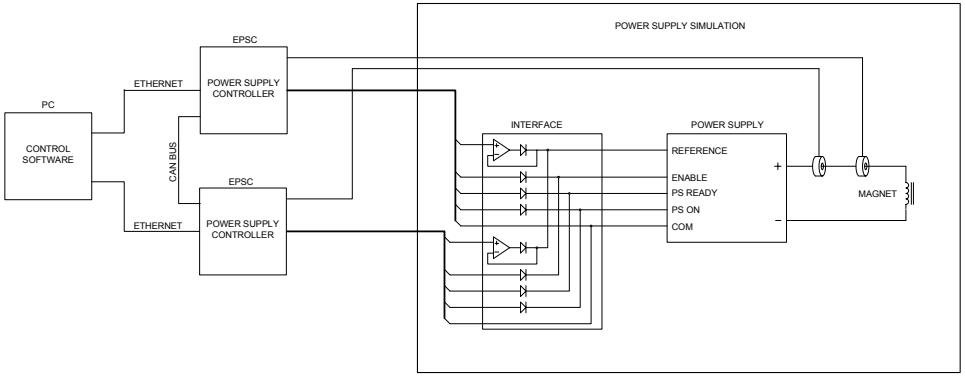

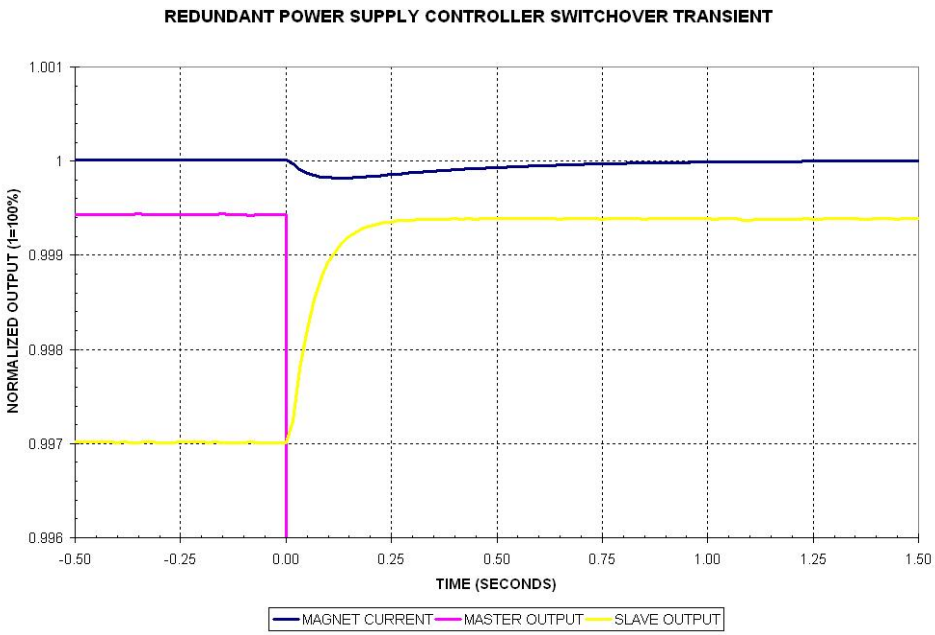

- Magnet PS Controller Failover Demo
  - Master, Slave controllers w/ CANbus link for synchronization
  - Digital regulation by PI control
  - Either unit can be designated Master
  - Master updates slave @ 120 Hz
  - Slave tracks Master until master fails (simulated by interlock trip)
  - Simulated magnet current dipped <.02% as slave smoothly assumes control, output settles in ~0.75 seconds
- Importance
  - This experiment (along with hot-swap of failed controller) demonstrates that normal 1-2 hr MTTR to swap a controller can be eliminated
  - Overall PS system goal is A>99%
  - Availability limited to <90% without redundant bulks and controllers

3.2.3 Diagnostic Processors for PS Systems

[SLAC, Pohang Accel. Lab (PAL), ANL]

- Develop embeddable diagnostics circuits for power systems to help minimize fault response time (MTTR) and predict impending faults.
- Module-level diagnostics in M+N systems also offer failure avoidance.

- Pohang Collaboration*
  - Full prototype designed, built to joint specifications
  - Delivered two tested units to SLAC late 2006
  - Evaluation program in large DC power supply underway at SLAC

- SLAC refocused on Diagnostic Controller for Marx modulator
  - Units installed and timing controls used for first test to 120 kV
  - Currently improving protection and shielding to mitigate noise trips.

- Diagnostics for HA Modular N+1 PS
  - Conceptual designs starting in conjunction with HA Controller design (3.2.1)
  - Small modules require custom hybrid circuit or IC implementation.

3.2.3 Diagnostic Processors

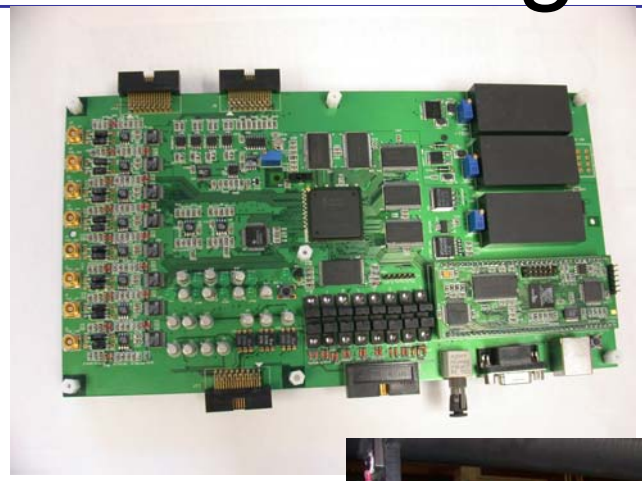

Prototype
For DC, Pulsed
Power systems
Pohang
Collaboration

Marx
Prototype Low
Power
Timing & Delay
Floats at Cell HV
up to 120 kV

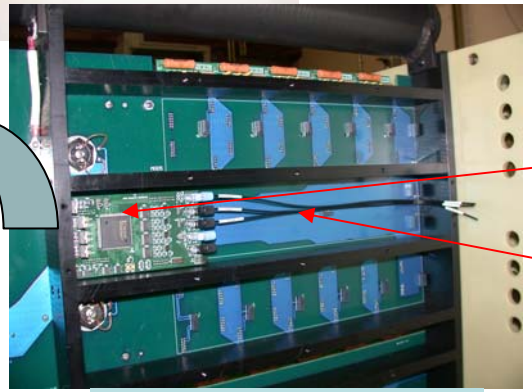

Marx Cell Rear View
DP Mounting

Marx Cell Front View
1 of 14

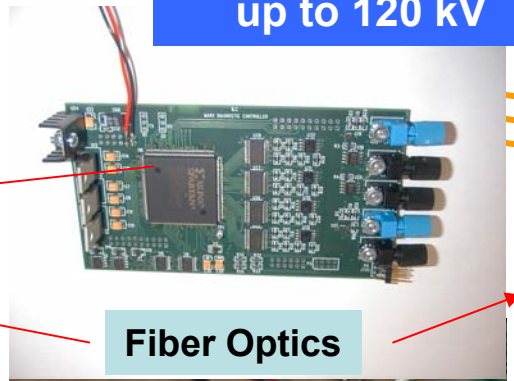

Fiber Optics

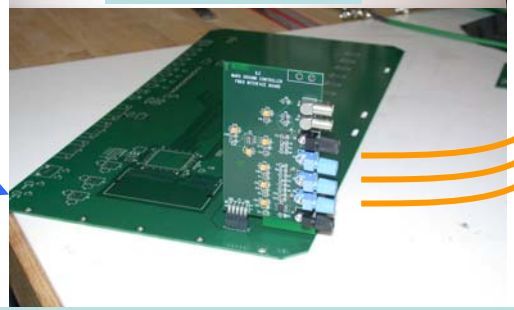

Ground Control Station (16 Ch)

Control Computer

3.2.4+3.2.4.2 HA Instrumentation Standards

[SLAC, UIUC, ANL, FNAL, DESY, KEK,]

- Description
  - Develop HA standard architectures for hardware and software, controls and front end instrumentation
  - Test critical features of hardware, applications software
  - Evaluate key applications, e.g. LLRF, BPMs, against candidate standard platforms
  - Candidate Platform: Advanced Telecom Computing Architecture (ATCA), A=0.99999 at crate level.

- Motivation
  - HA required to meet up-time goals
  - Instrument standards essential for engineering, maintenance efficiency, low cost
  - New gigabit serial technologies provide opportunities to move designs to next generation technologies embraced by industry

3.2.4 + 3.2.4.2 Progress

- Progress on ATCA (3.2.4)
  - Major labs have purchased starter kits (SLAC, Argonne, Fermilab)
  - FNAL, DESY started new instrumentation & controls designs for both ATCA and µTCA. (DESY evaluating ATCA for XFEL Controls)
  - UIUC developing spec. for ATCA carrier card to host VME cards.
  - Highly successful ATCA ATCA workshop and papers at RT-2007.

- Progress on HA software (3.2.4.2)
  - Exploring high availability solutions for control system software.
  - Identified several candidate frameworks, including *OpenClovis*.
  - Exploring ATCA from a control system software perspective.
  - EPICS ported to ATCA CPU blades running Linux.
  - Demonstrated basic redundancy and failover with EPICS using clustering software and a virtual machine.

ATCA Starter Kits

5-Slot Crate w/ Shelf Manager
Fabric Switch
Dual IOC Processors

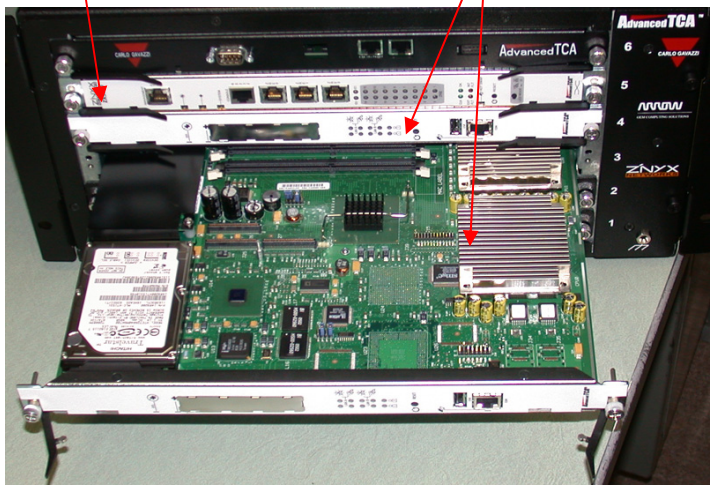

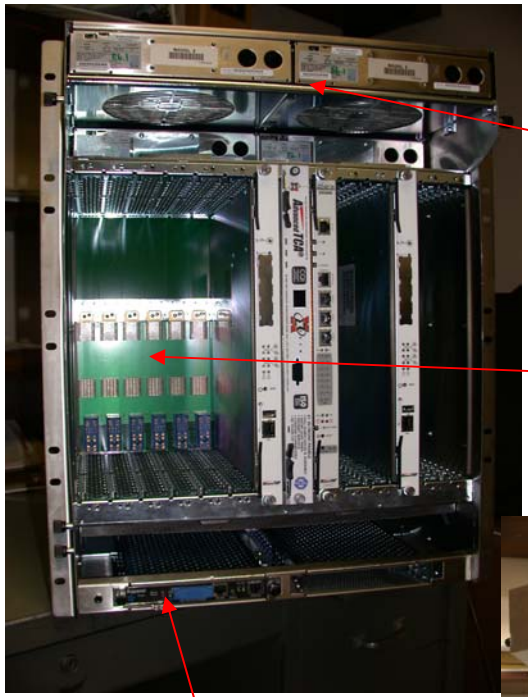

4 Hot-Swappable Fans

16 Slot Dual Star Backplane

Shelf Manager

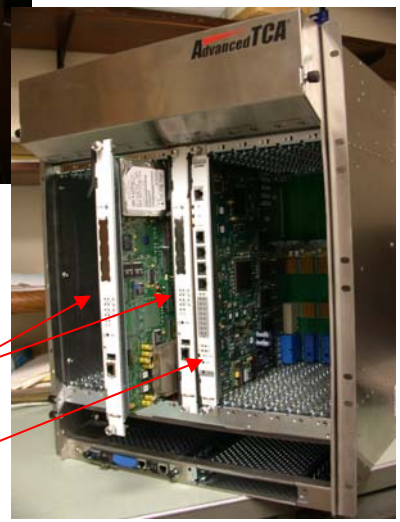

Dual IOC's Fabric Switch

Dual 48VDC Power Interface

Rear View

University Programs

- U.Penn: Real Time Simulator for ILC RF & cryomodules
  - Penn Virtual Cavity (PVC), Real Time Simulator
  - Cavity Tuners
- UC. Davis
  - Radiation Damage Studies of Materials and Electronic Devices Using Hadrons
- UIUC (via MOU from SLAC)
  - ATCA evaluation for front-end electronics applications.
  - Developing spec for VME interface to ATCA.

Americas

Facilities WPs in FY06/07

	FY06 WP	FY07 WP		Lab	FY06 FTEs	FY06 M&S K$	FY07 FTEs	FY07 M&S K$
	2.y Accelerator Design				**1.5**		**3.9**	**38**
	2.2.1	2.2.1	Global systems design	SLAC	1.2		0.9	
	2.2.2	2.2.2	Control System design	SLAC	0.3		0.3	
		2.2.3	Control System design	ANL			0.9	13
		2.2.4	Installation	SLAC			1.9	25
	3.y R&D				**1.5**	**179**	**3.4**	**858**
	3.2.1	3.2.1	High availability power supplies	SLAC	1.2	23	1.5	560
	3.2.3	3.2.3	Diagnostic Processor for power supply	SLAC		21	1.4	40
		3.2.3.1	Diagnostic Processor for power supply	ANL			0.2	33
	3.2.4	3.2.4	High availabilty control system & standard instr. Modules	SLAC		118		192
		3.2.4.2	High Availability Standard Modules for Instrumentation Systems	ANL			0.4	18
	3.10.10	3.10.10	Nanometer resolution BPM system	LLNL	0.3	17	0.1	15
	5.y Facilities				**4.6**	**390**	**1.5**	**78**
	5.8.4	5.2.1.1	LLRF Controls	FNAL	1.9	135		
		5.2.1.2	FNAL Test facility Instrumentation and LLRF Controls Collaboration	SLAC			0.2	29
	3.9.1	5.8.5	Superconducting RF Cavity HOM BPM Project for the TTF VUV-FEL	SLAC	1.1	124	0.5	15
	3.10.2	5.10.4	ATF2 Cavity BPM Electronics	SLAC	1.6	131	0.4	34
		5.10.6	ATF2 S-band and IP Cavity BPM	SLAC			0.4	
				Totals	**7.6**	**569**	**8.8**	**974**

5.8.4 - LLRF Controls

- LLRF is an R&D focus of the beam test facilities.
- LLRF phase/amplitude control
  - Develop very good feedback/control algorithms for single cavity and subsequently for multiple cavities.
  - Address LLRF goals of RDB S2.
  - Study the SCRF cavities from an LLRF perspective.
- Precision timing / RF phase reference distribution

5.8.4 - Accomplishments

- Testing prototype 10-channel and 33-channel LLRF controllers with lower noise and higher capacity to host DSP & control algorithms.
- A 3.9 GHz LLRF system has been developed for use at A0 with a copper cavity.
- Migration from a 250 kHz Intermediate Frequency (IF) to a 13MHz IF for the cavity RF signal down conversion
- Constructed and in process of testing of piezo-electric fast tuner hardware and software for Capture Cavity II.
- Continuing single + multi-cavity simulations, beginning development of a real time simulator (U.Penn)

LLRF Results with 13MHz IF

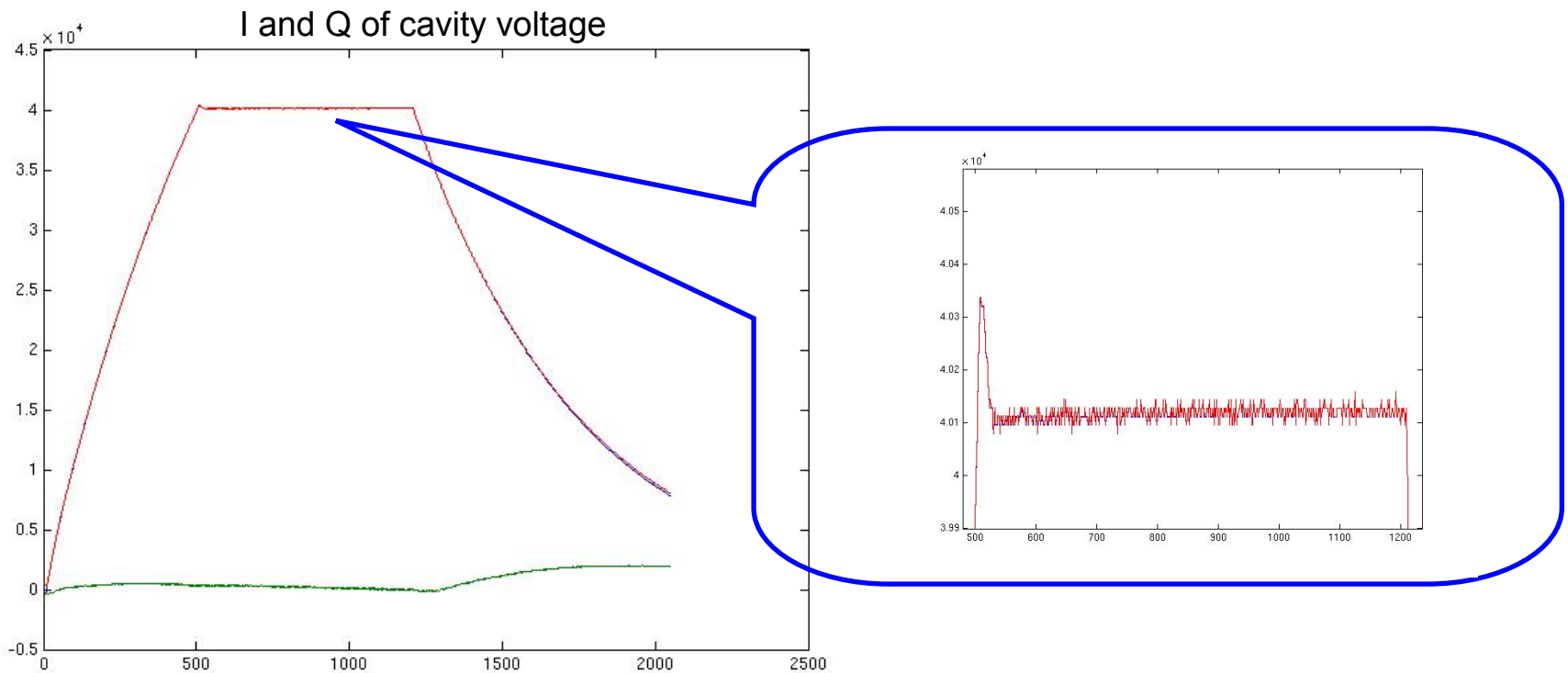

- Gained 20x improvement in noise levels vs 250KHz IF.
- Encouraging results that opens up new studies
  - Study undesired cavity modes (such as 8/9 π) which are now in the pass band and will cause instabilities.
  - Filter optimization, new control strategies.

U.Penn Virtual Cavity (PVC)

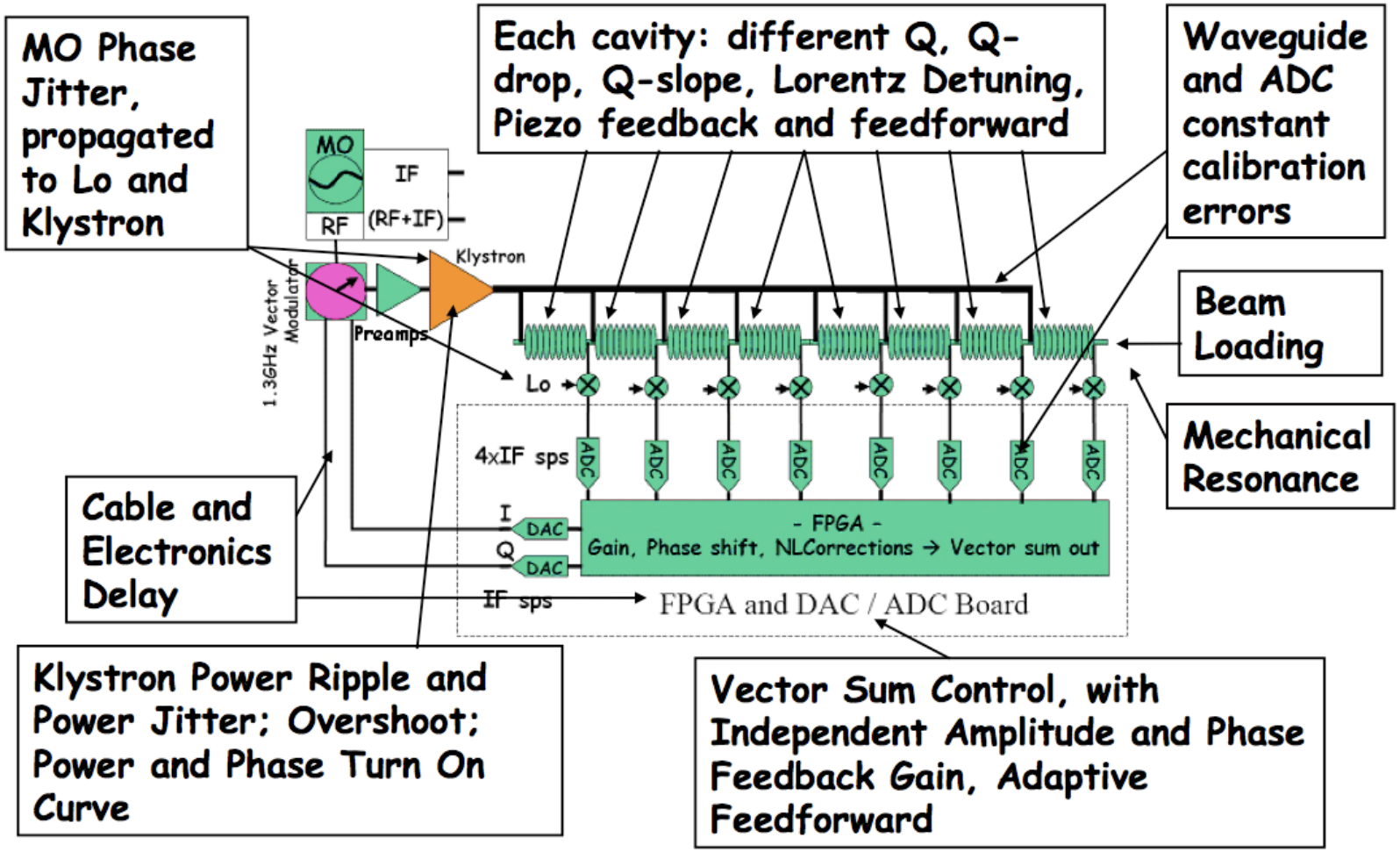

http://einstein.hep.upenn.edu/~keungj/simulation.html

Justin Keung

3.10.2+5.10.4 - ATF2 Cavity BPM R&D

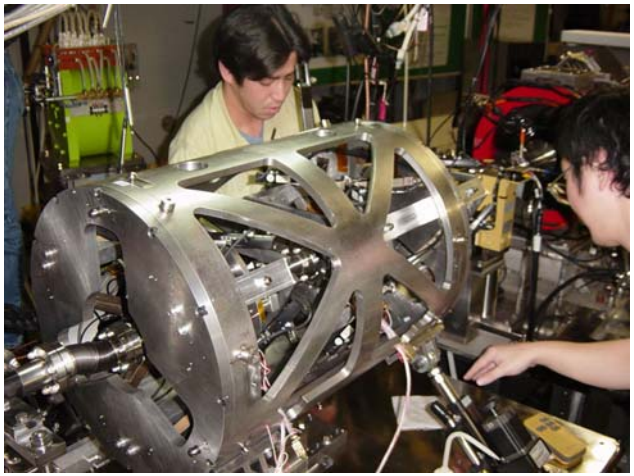

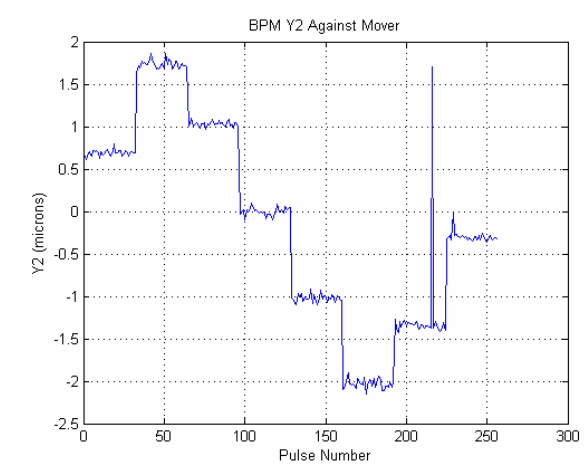

Move BPM in 1 μm steps

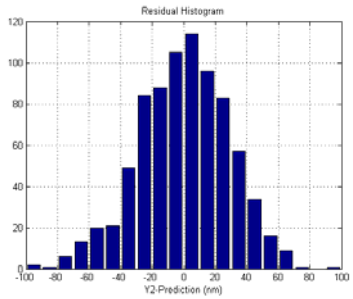

- **10 minute run**
- **800 samples**
- **σ ≈ 24 nm**

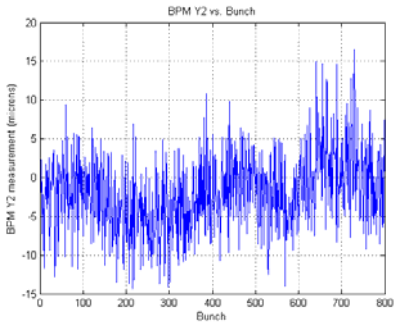

- Testing of various C-Band cavity BPM shapes
- Spaceframe with 3 BPM's, mounted on hexapots for alignm.
- Analog dual downconverter
- Reference cavity for amplitude and phase normalization
- 14-bit digitizer
- Demonstrated with beam:
  24 nm resolution!

3.9.1+5.8.5 - HOM BPM Studies (FLASH)

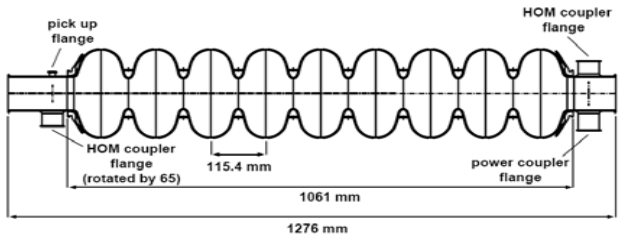

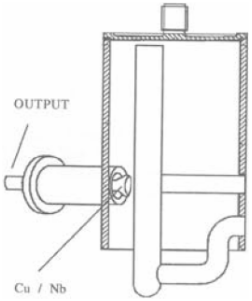

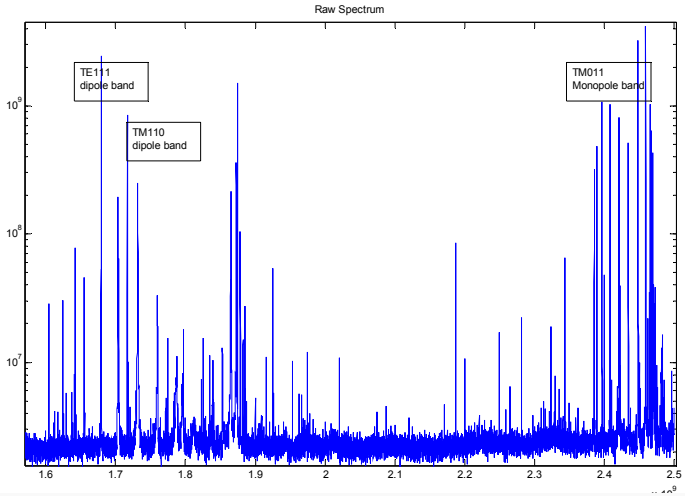

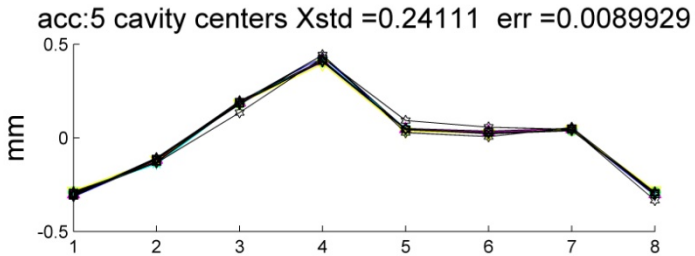

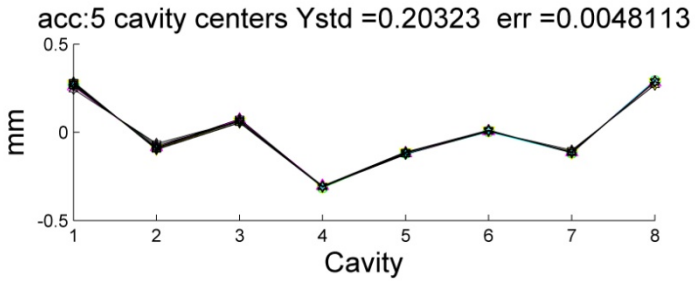

HOM Studies Collaboration

- Beam-based cavity alignment
- HOM BPM system (~ 5 µm res.)
- Broadband beam phase detection

Integrated with DOOCS

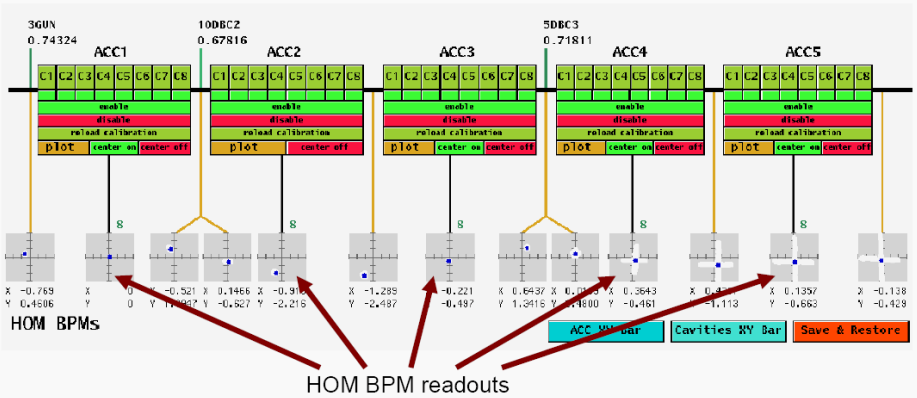

- Output is the average of all enabled HOM BPMs in each module.

x.2 Budget Planning for FY08/09

x.2 Scope and budget

- Scope
  - Support EDR activities in the six x.2 topic areas
  - Support targeted R&D programs
  - Facilities programs

- Budget targets
  - FY08: $5.6M (ILC) + $4M (SRF)
  - FY09: $7.0 (ILC) + $4.7M (SRF)

x.2 Priorities for FY08/09

- 2.y - Support EDR activities in the six x.2 topic areas
  - Develop/foster inter-regional WP-based R&D program.
  - Foster collaborations, grow the participation in all three regions.
  - Refine engineering and costing models.
  - Continue availability studies (system-level, subsystem-level).
  - “Level-3 Topic Leadership”
- 3.y - Support targeted R&D programs, demonstrate performance
  - RF phase/amplitude control of beam-loaded cavities.
  - Develop reliable precision beam instrumentation.
  - R&D on high availability for electronic and software systems.
- 5.y - Facilities
  - Technical Systems support for Test Facilities (ILCTA)
  - Evaluate + gain field experience with prototypes from R&D program.

Americas

x.2 Budget allocations by topic

WBS	Description		FTE	Direct M&S K$	Total k$	FTE	Direct M&S K$	Total k$
1.y	*Management*	*ILC*	*0.5*	*30*	*151*	*0.5*	*40*	*163*
2.y	*Accelerator Design*	*ILC*	*6.3*	*275*	*1554*	*7.5*	*440*	*1975*
	Commissioning / Operations		1.0			1.0		
	Global Controls		1.0			1.3		
	Installation		2.0			2.0		
	Instrumentation and Feedback		1.0			1.3		
	Survey & Alignment		0.3			0.5		
	LLRF		1.0			1.5		
3.y	*R&D*	*ILC*	*12.2*	*1210*	*3890*	*13.3*	*1225*	*4487*
		SRF	*1.0*	*45*	*233*	*1.5*	*45*	*323*
	Commissioning / Operations		2.2	160		1.0	35	
	Global Controls		3.0	430		3.8	465	
	Installation							
	Instrumentation and Feedback		3.5	335		4.0	415	
	Alignment							
	LLRF		4.5	330		6.0	355	
5.y	*Facilities*	*ILC*	*0.8*	*100*	*302*	*2.0*	*180*	*636*
		SRF	*15.3*	*1009*	*3927*	*19.8*	*823*	*4534*
	Global Controls		7.5	350		10.0	262	
	Instrumentation and Feedback		3.5	355		4.3	330	
	LLRF		5.0	404		7.5	411	
	Total ILC		*19.7*	*1615*	*5897*	*23.3*	*1885*	*7261*
	Total SRF		*16.3*	*1054*	*4160*	*21.3*	*868*	*4857*

Does not fully reflect Facilities activities under SRF line

Planning considerations

- A broad scope of activities must be supported. Difficult to consolidate to a small number of adequately-funded programs.
- Plan does not reflect the full scope of effort
  - WPs funded or supplemented by Lab core funds outside ART/SRF funding guidelines.
  - Full scope of work planned for the test facilities.
- Most of the R&D and design activities are manpower intensive.
- In progress: integration of ART R&D priorities with test facility programs.

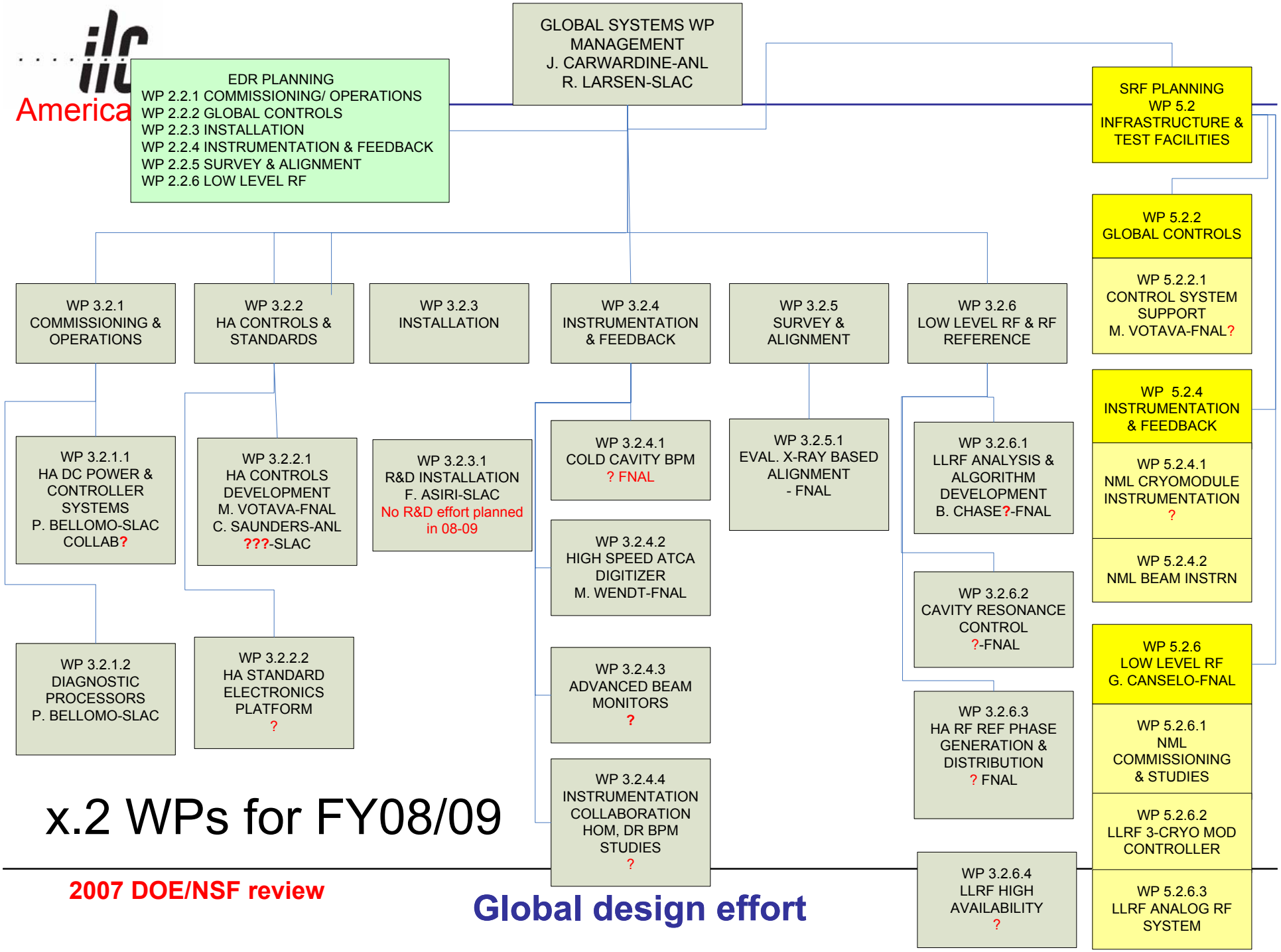

x.2 WPs for FY08/09

2007 DOE/NSF review

Global design effort

LLRF in FY08/09

- LLRF analysis and Algorithm development
  - Develop and implement feedback and LLRF control algorithms
  - Cavity modeling, running measurements and testing new algorithms.
- Cavity Resonance Control
  - Study the performance of piezo and magnetostrictive tuner in controlling and sensing mechanical oscillations in cavities.
- Precision RF Reference generation and distribution
  - Develop long-haul (km) and ‘short-haul distribution (100m).
  - Test redundancy and transparent fail-over.
- LLRF for NML
  - LLRF for 3-cryomodule control
  - LLRF analog components

LLRF control algorithms

- Control Algorithms(Fdbck/ Feedforward)
- Meas. QL and detuning
- Cavity Frequency Control(Fast and Slow)
- Amplitude/Phase Calibration
- Vector-Sum Calibration
- Loop phase and loop gain
- Adaptive Feedforward
- Exception Handling
- Klystron Linearization
- Lorentz Force Compensation

Long-haul RF phase distribution

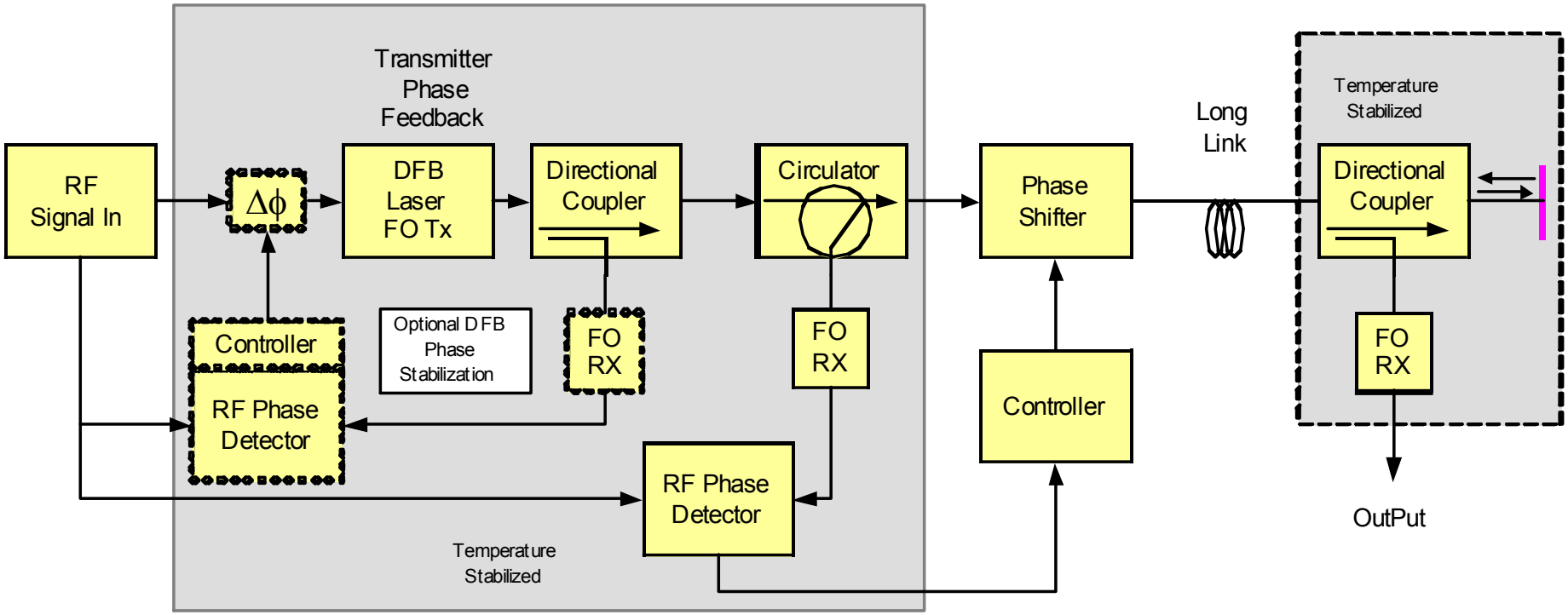

Instrumentation in FY08/09

- Cold L-Band cavity BPM development [FNAL]
- ATCA digitizer (eg cavity BPMs) [FNAL]
- Advanced beam monitors
  - Bunch length, bunch arrival time (EOS, diode-detect.)
  - Beam phase (EOM), beam profile (Laser-wire), etc.
- Collaborations
  - HOM studies [SLAC, FNAL]
  - ATF2 cavity BPM's [SLAC]

- NML infrastructure instrumentation [FNAL, SLAC]
  - Cryomodule instrumentation
  - Beam instrumentation.

Cold L-Band Cavity BPM R&D

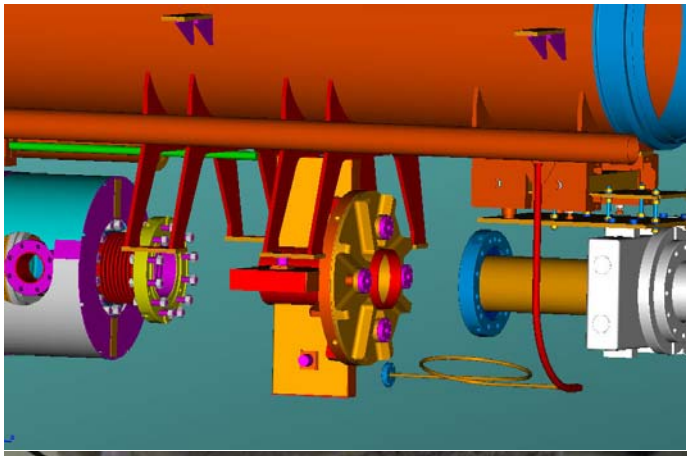

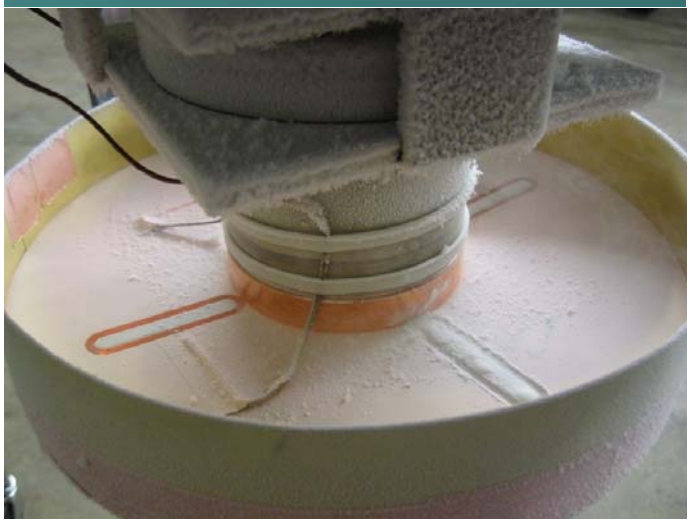

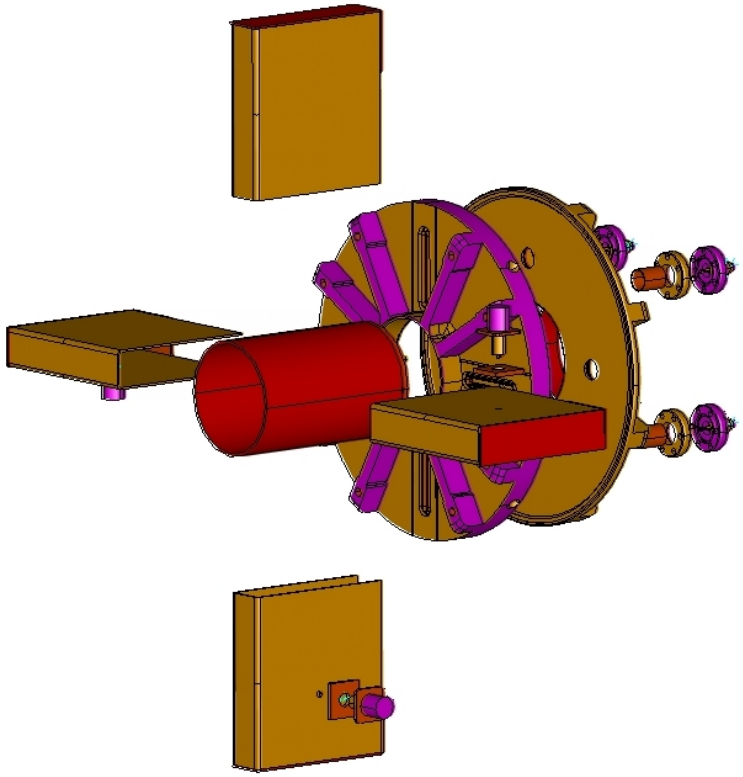

Goal: Development of a **cold CM-free L-Band cavity BPM** with 1 µm single bunch resolution

EOS Bunch Length Measurement

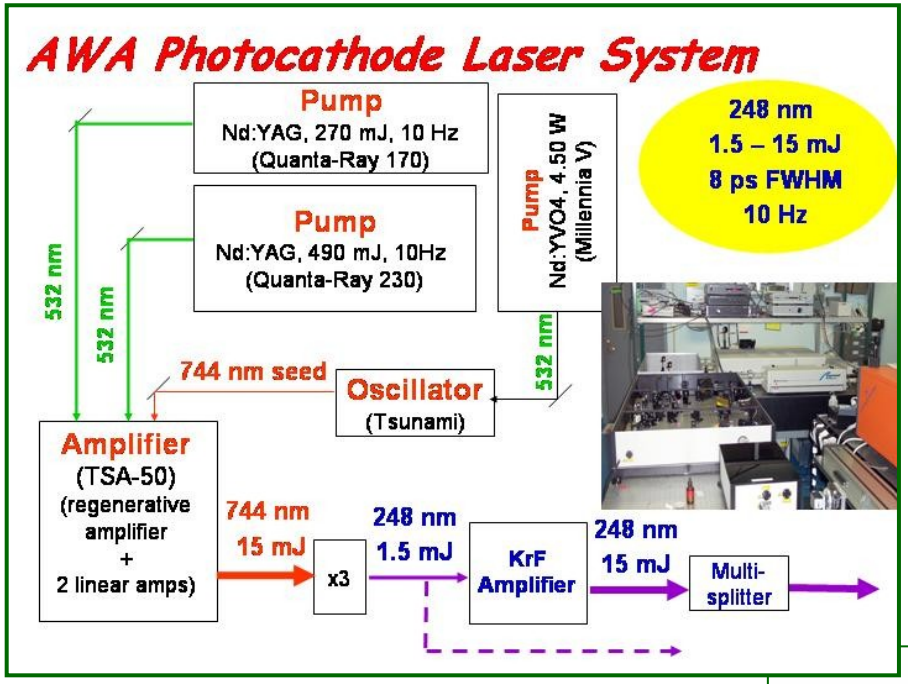

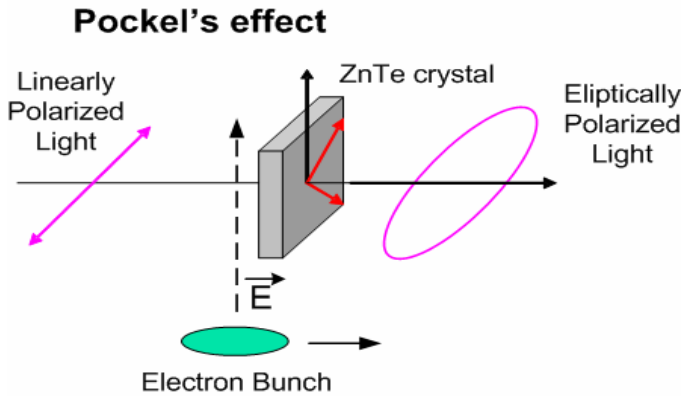

Electro-optical sampling (EOS) by temporal decoding

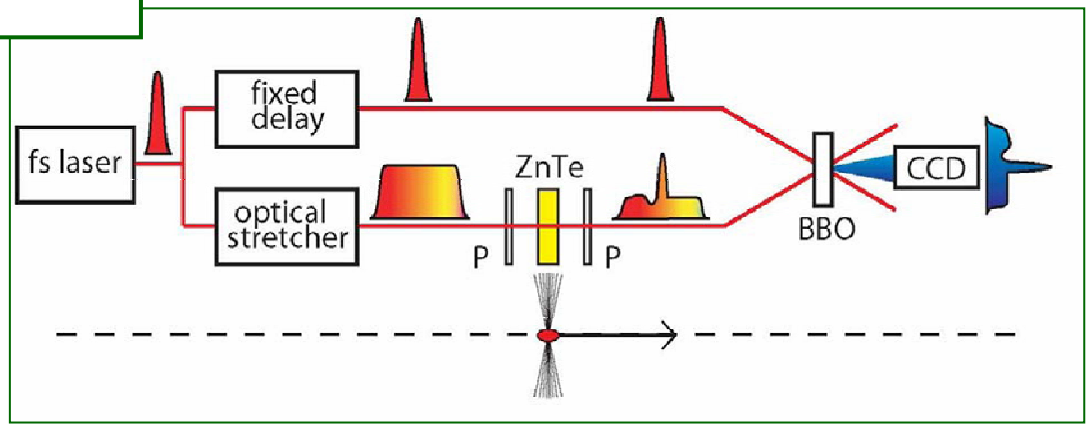

EOS Studies Collaboration at the ANL Advanced Wakefield Accelerator (AWA)
<u>Goal:</u> Bunch length measurement R&D

Focus on High Availability

- The ILC accelerator complex must deliver high up-time *from the onset of the ILC operations phase*
  - Availability depends on both fault rate and recovery time.
  - Crate-level availability: “Five Nines” (A=0.99999).
  - Cannot rely on the standard approach of ‘best effort’ plus incremental improvements based on operational experience (“fix as we go”).
  - M+N redundant systems offer tolerance to failures …but it’s much more than just adding redundancy

Accelerator systems must be *designed* for high availability.

HA Integration

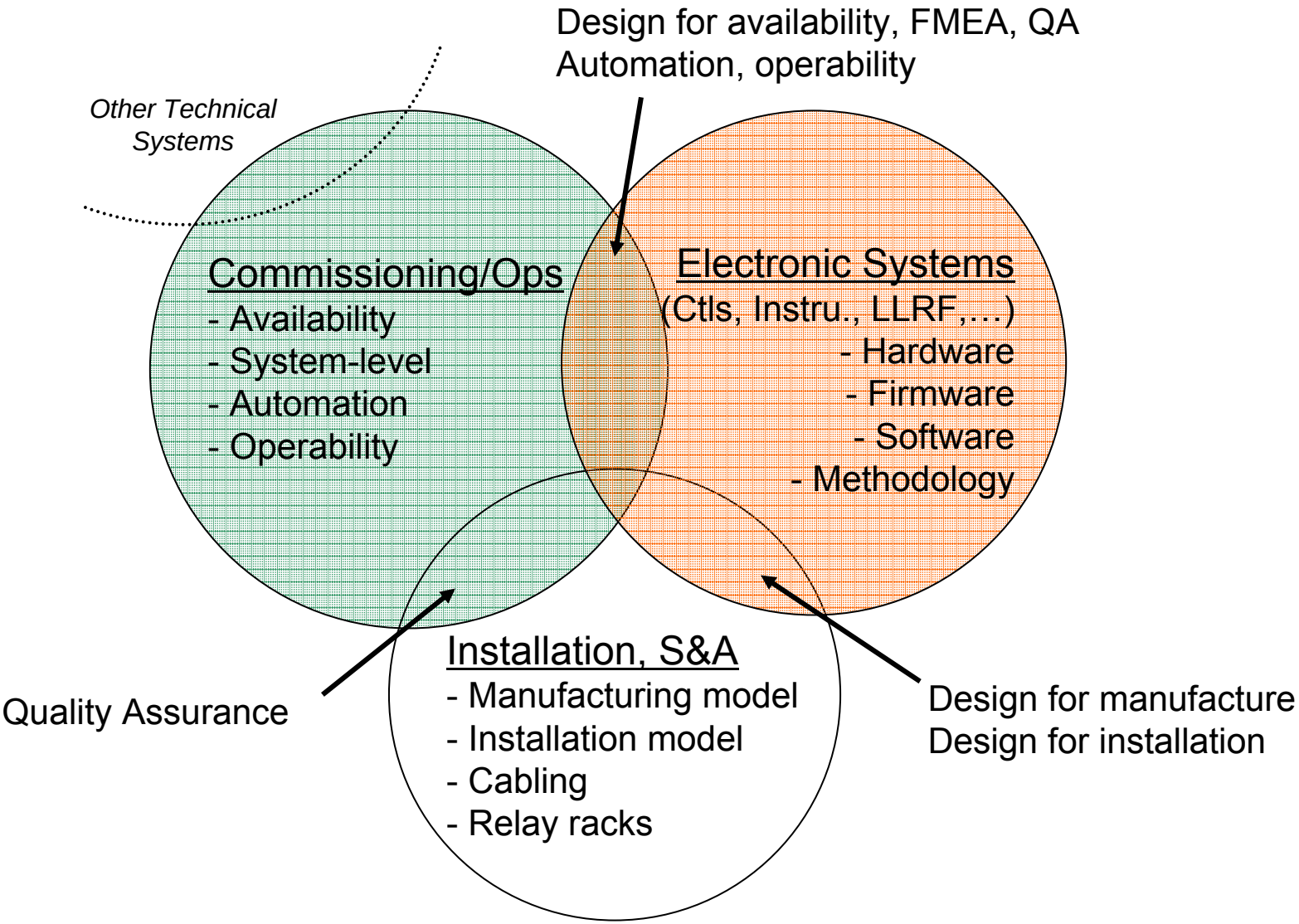

R&D program for HA

- Configuration management, QA, etc will be essential for success once the ILC reaches the project phase.

- In the mean time, we need to become better equipped to make sound technical and cost-conscious design decisions
  - Learn what it takes to implement HA technical solutions.
  - Evaluate payback and cost / penalty.
  - Evaluate graded (measured) implementation and applicability.

- HA R&D targets electronic systems (hardware, firmware, software)
  - HA PS (and kicker) - N+M redundancy schemes.
  - Controls architecture, software ‘ecosystem’, availability management.
  - Evaluation of ATCA electronics platform (more than just HA).

R&D field evaluations

- Deploy R&D prototypes at operating facilities
  - Gain implementation and field experience
  - Focus on NML.
  - Will be specific expectations of relevant R&D WPs.
- Examples…
  - Evaluate ATCA & uTCA as electronics platform
  - High Availability Control System evaluation system
  - Precision RF phase reference distribution
  - Inherent in instrumentation and LLRF programs.
- Detailed planning is continuing…

FY08/09 Summary

- Plan for FY08/09 is budget-limited, but supports most of the important programs

- Still some unknowns, eg scope of EDR
- Focus on putting R&D HA results into action in TF.

- Work in progress: resolving the details…
  - Tune new Americas WP's, management structure
  - Transition WP's toward inter-regional integrated R&D program to meet EDR goals.

Backup & extra slides

2.2.4 Installation (FY08/09)

Americas

Scope of work and budget plan for FY08 & FY09 (Requested)

Tasks	Scope of work (FY 08-09)	Tools and software	FY 08			FY 09		
			M&S		FTE	M&S		FTE
			Software (licenses)	Technical support		Software (licenses)	Technical support	
4D model	3D modeling	CATIA	$30K	$35K	2			
		AutoCAD	SALC license	$5K				
	Scheduling	Primavera	$10K	$25K				
	4D modeling of installation plan	NavisWorks	$5K	$10K				
Operation optimization	4D-based time-space conflict simulation and analysis	NavisWorks	Included above	Included above				
	Interface and interference checking	CATIA				$30K	$35K	2
	Optimization of equipment installation plan	Graphisoft Control				$10K	$10K	
4D database	Development of 4D database system (described in detail below)	SQL or MS Access				$25K	$25K	
		NavisWorks				$5K	$10K	
		Total	~$45K	~$75K	2	~$70K	~$80K	2

ATF Damping Ring BPM Upgrade

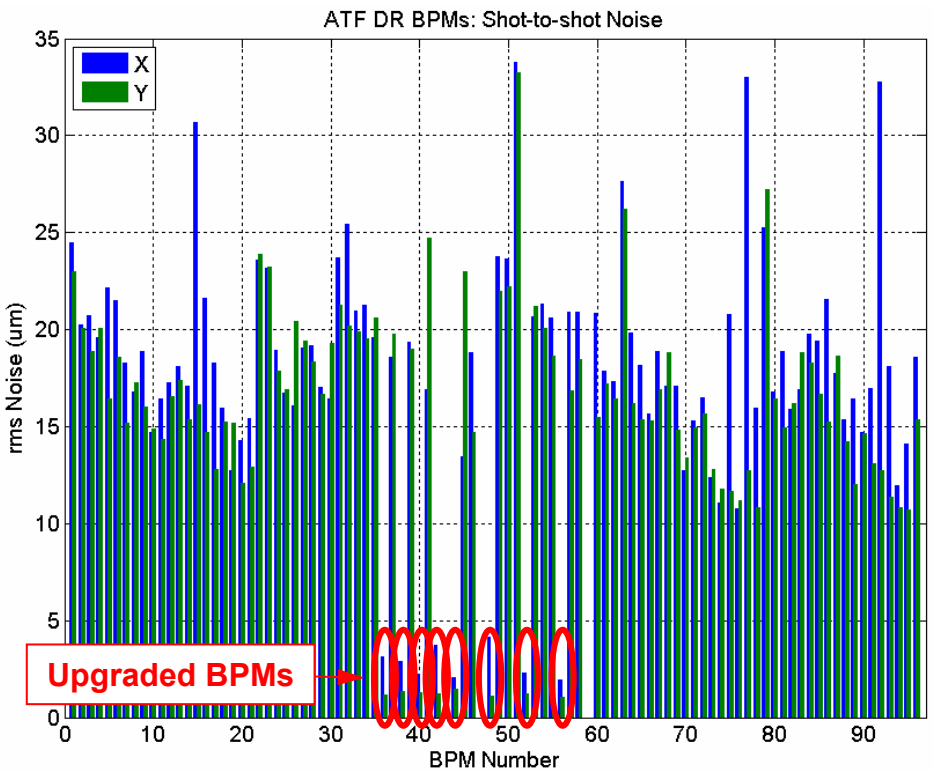

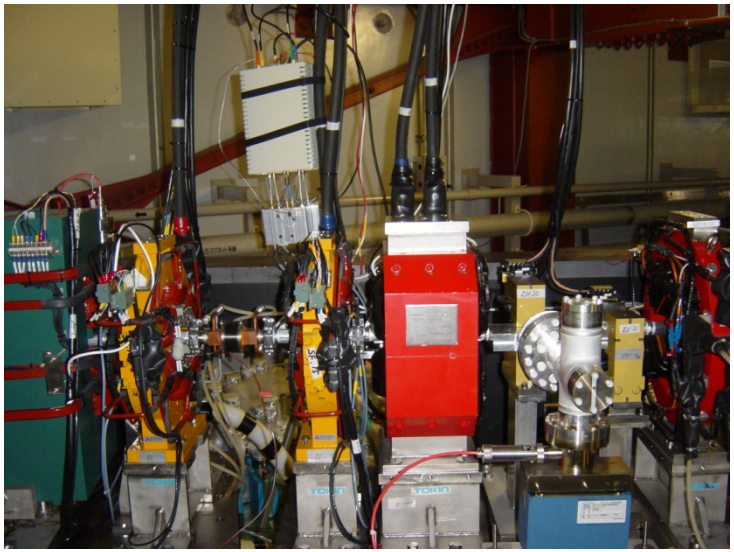

ATF DR BPM Upgrade Collaboration
with help of the force of "Joda"
Goal: 0.1 μm resolution to achieve < 2 pm vertical emittance in the ATF damping ring
Achieved in March 07: 0.6 μm

Instrumentation R&D at ESA

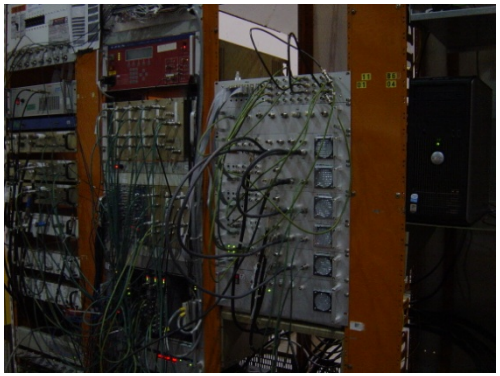

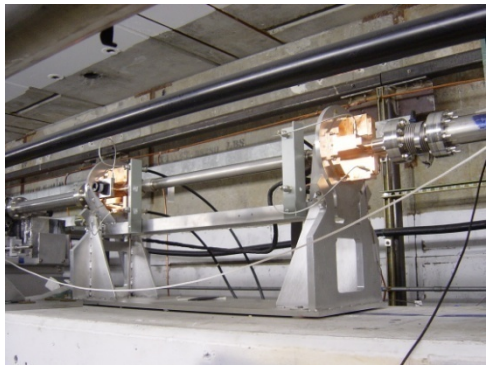

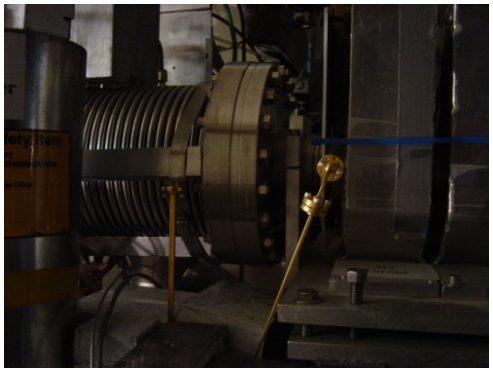

ILC Beam Instrumentation R&D

at the SLAC Endstation A (ESA)

- BPM energy spectrometer (T-474)
- Synch Stripe energy spectrometer (T-475)
- Bunch length diagnostics (LOLA, 90GHz diode, T-487)
- IP BPMs/kickers—background studies (T-488)
- LCLS beam to ESA (T490)
- Linac BPM prototypes
- EMI (electro-magnetic interference)

RDR view of linac RF station

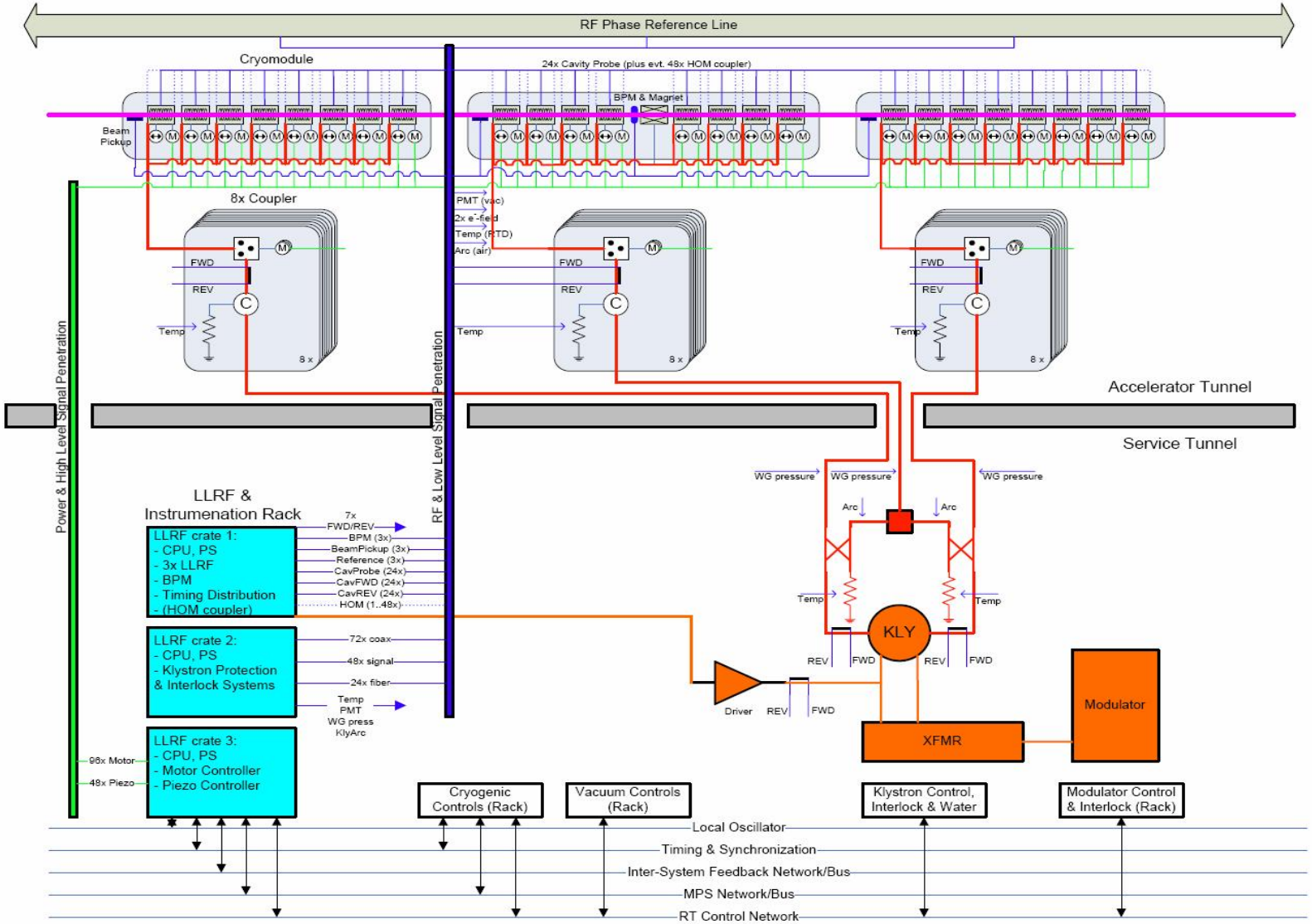

Not just redundancy…

…but also sound design principles, methodology, QA

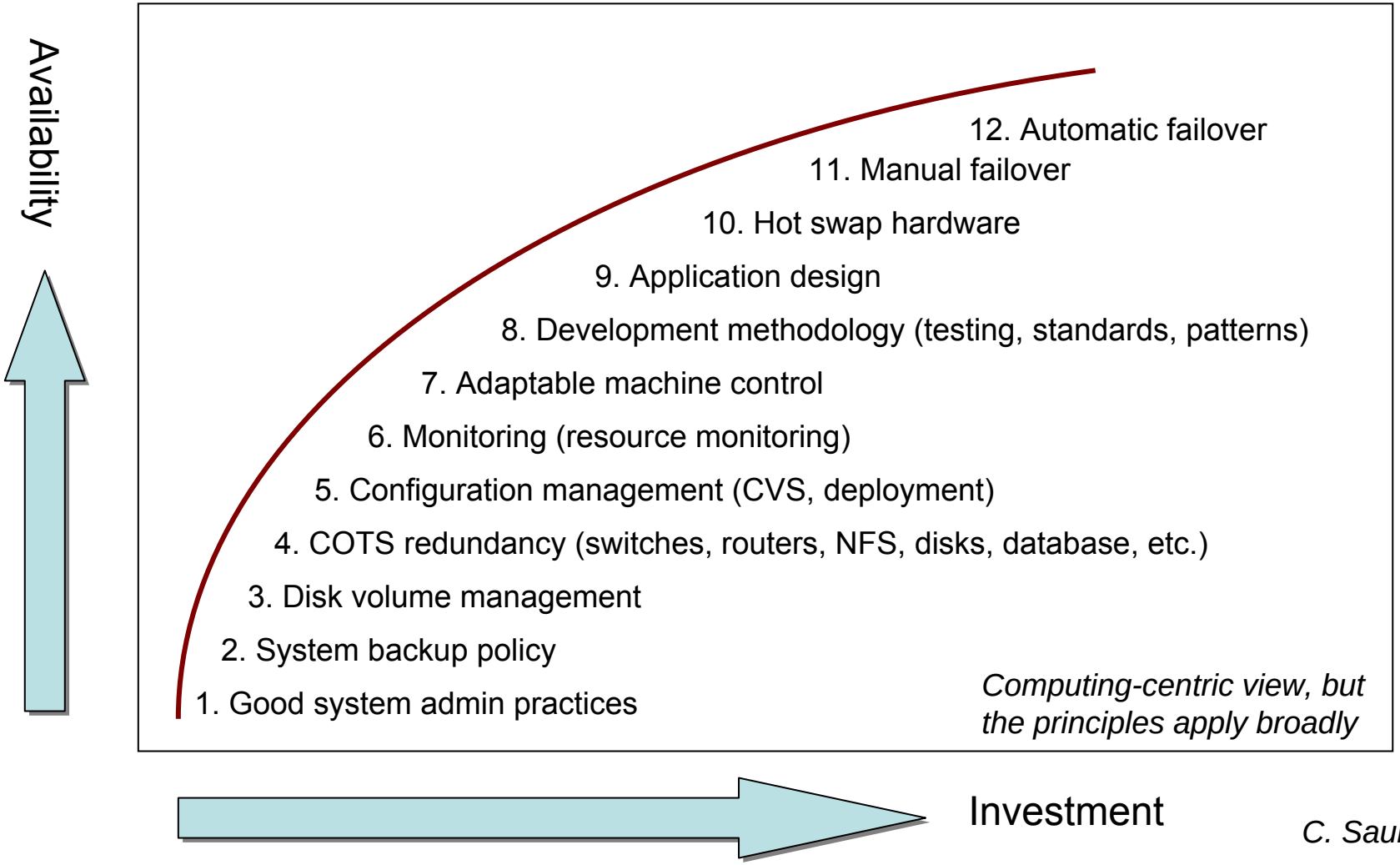

Investment

C. Saunders

Prototype HA Controls Core Test