SiD Overview & Opportunities

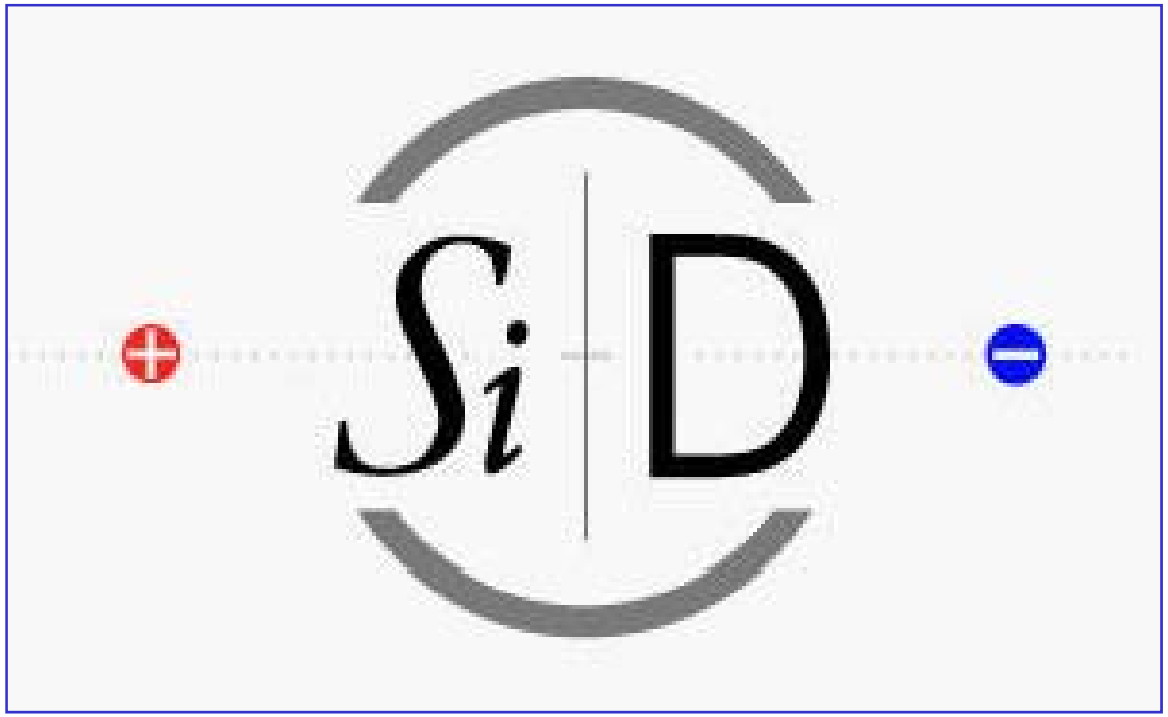

Jerry Blazey
Northern Illinois University
LCWS07-Hamburg
June 1, 2007

http://www-sid.slac.stanford.edu/

The Challenge: Discovery & Precision Measurements

- **Higgs & Recoil Mass Reconstruction (ie ZH) →**
  - **excellent momentum resolution**
- **Higgs Decays →**
  - **efficient b and c jet tags**
  - **precision di-jet mass (PFAs) to separate Ws and Zs**
- **SUSY Searches →**
  - **hermiticity**

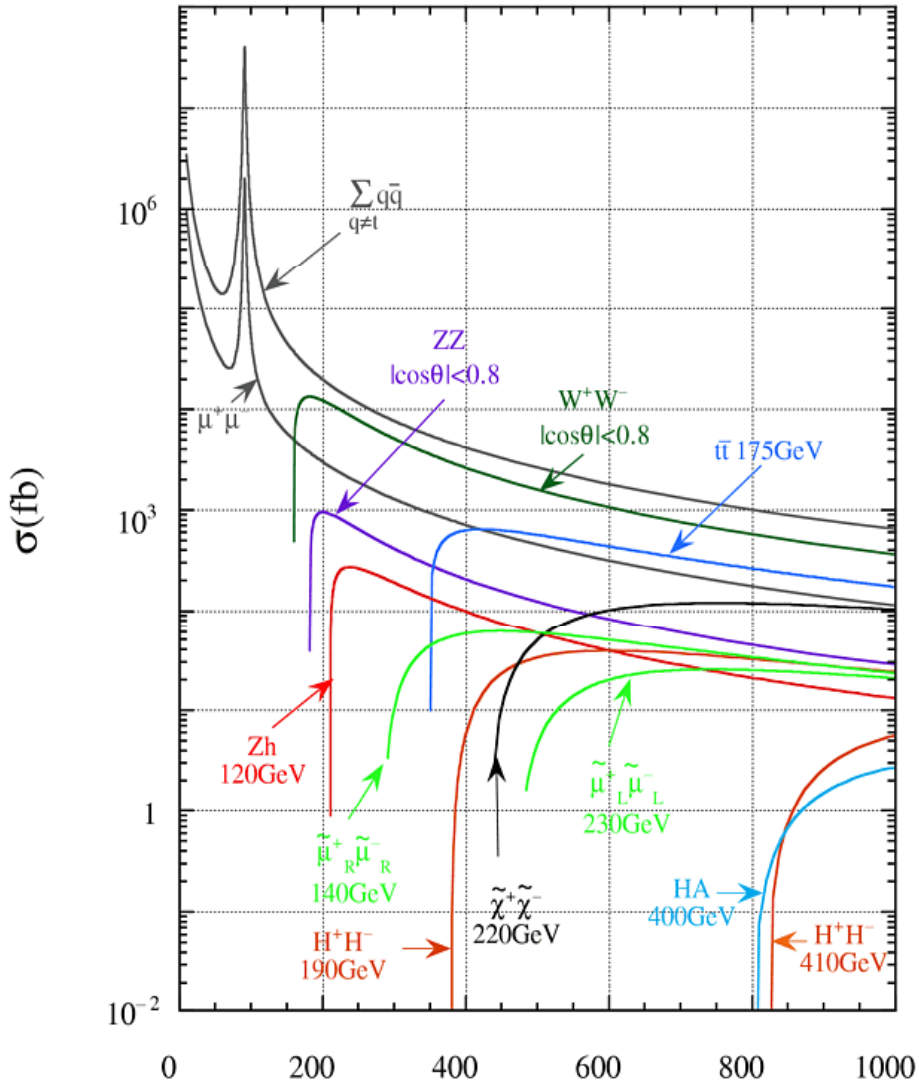

http://www-sid.slac.stanford.edu/

The SiD Response

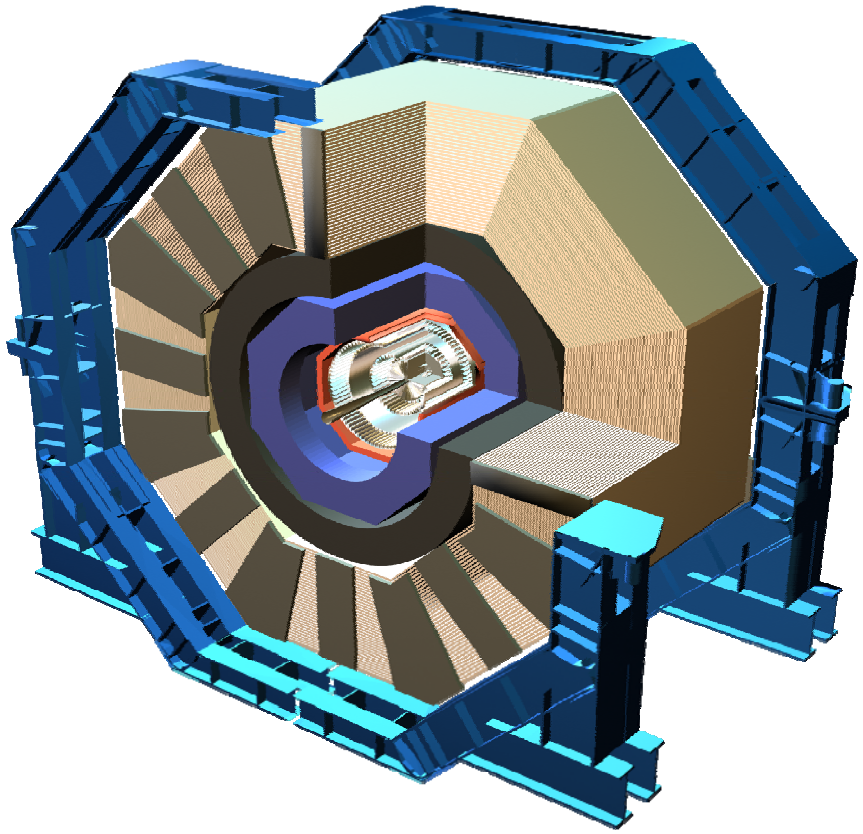

- VTX Tracker **at minimum possible radius with max solid angle:**

$\sigma_{r\phi} \sim \sigma_{rz} = 5 \oplus 10/p(\sin^{3/2}\theta)\ \mu m$

- Silicon strip tracker **for excellent momentum resolution and robust performance**

$\Delta p_t/p_t^2 \leq 5 \times 10^{-5}\ GeV^{-1}$

- **Dense, highly segmented,** Si-W Ecal and Hcal with a goal of

$\sigma_{mjj} = 3\text{-}4\%$

- Instrumented flux return **for muon identification**

Effort required to meet these ambitious goals …

http://www-sid.slac.stanford.edu/

SiD Details & Dimensions

Flux return/muon
R_{in}= 333 cm
R_{out}= 645 cm

Solenoid: 5 T; R_{in}= 250 cm

PFA

HCAL Fe: 34 layers; R_{in}= 138 cm

EMCAL Si/W: 30 layers R_{in}= 125 cm

Si

Si tracking: 5 layers; R_{in}= 18 cm

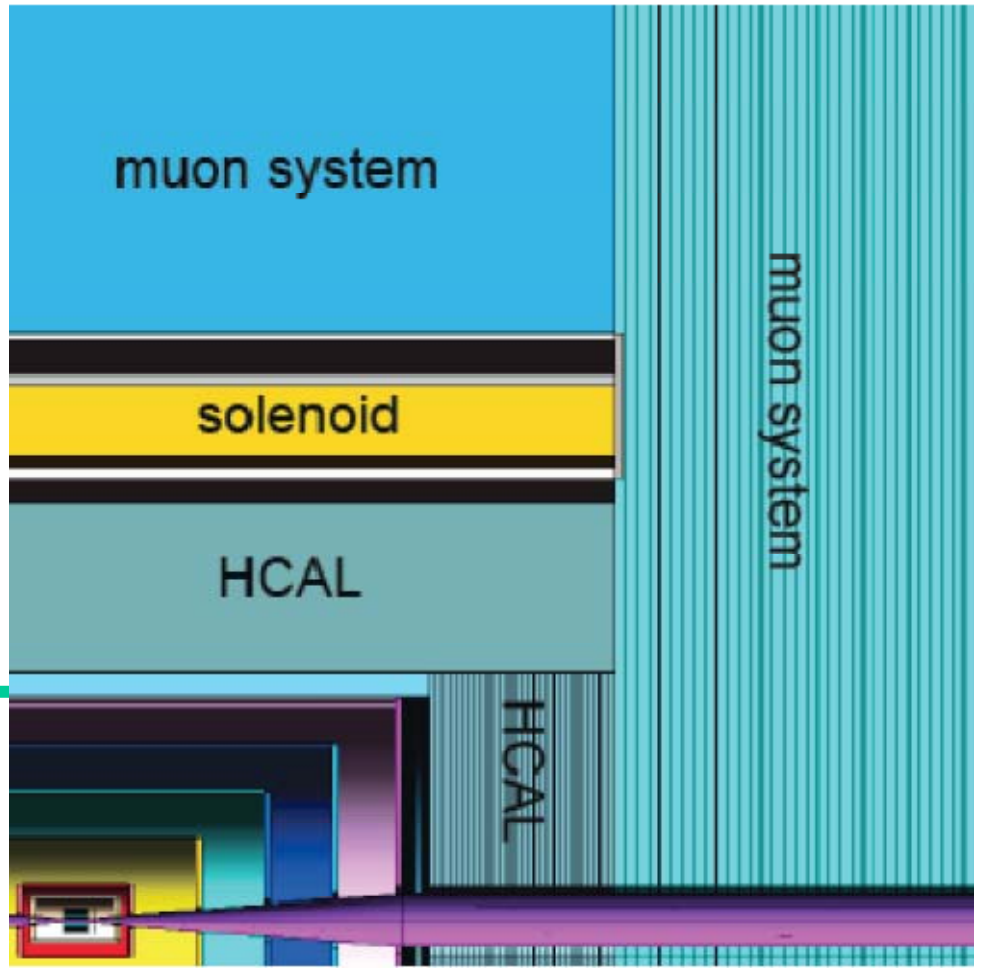

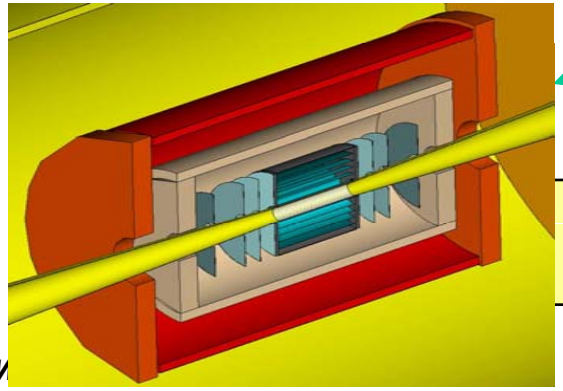

Vertex detector:
5 barrels, 4 disks; R_{in}= 1.4 cm

Integrated Tracking: Pixel Vertex Detector & the Tracker

- **VXD: standalone tracker**
  - **Space-point resolution < 4μm**
  - **Superb impact parameter resolution**
- **Five barrel layers**
- **Four forward layers**
- **Transparency (~0.1% X_0 per layer)**
- **14 mm from beam pipe**

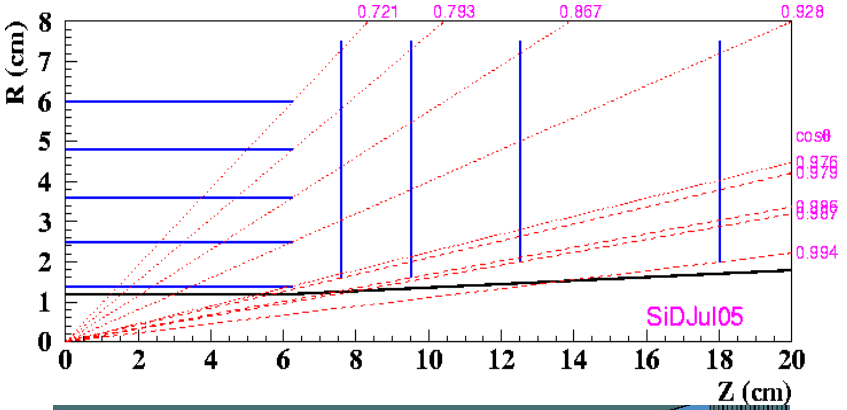

- **Tracker: R_i=0.22 m, R_o=1.23 m, L= 3.3 m**
- **Five cylinders**
  - **tiled with 10x10cm² single sided microstrip sensors**
  - **Material budget 0.8% X_0/layer**
- **Five (x2) endcap disks**
  - **tiled with R, ϕ microstrip sensors**
  - **Material budget 1.3% X_0/layer**

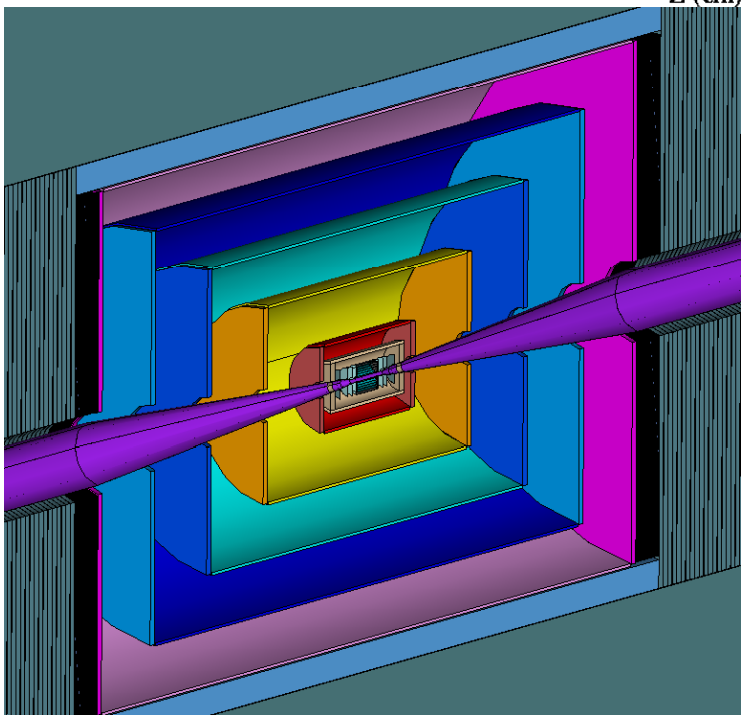

Tracking Performance

- **Full simulation**
- **Vertex detector seeded pattern recognition (3 hit combinations)**
- **Event Sample**
  - **ttbar-events**
  - **√s = 500 GeV**
  - **background included**

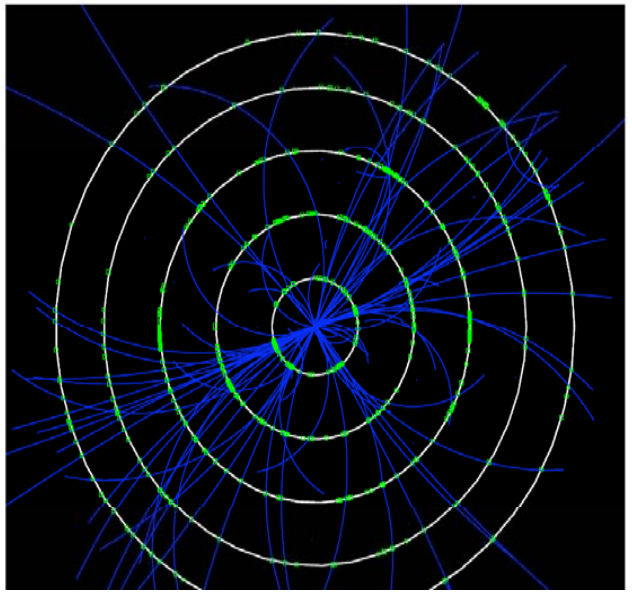

Efficiency

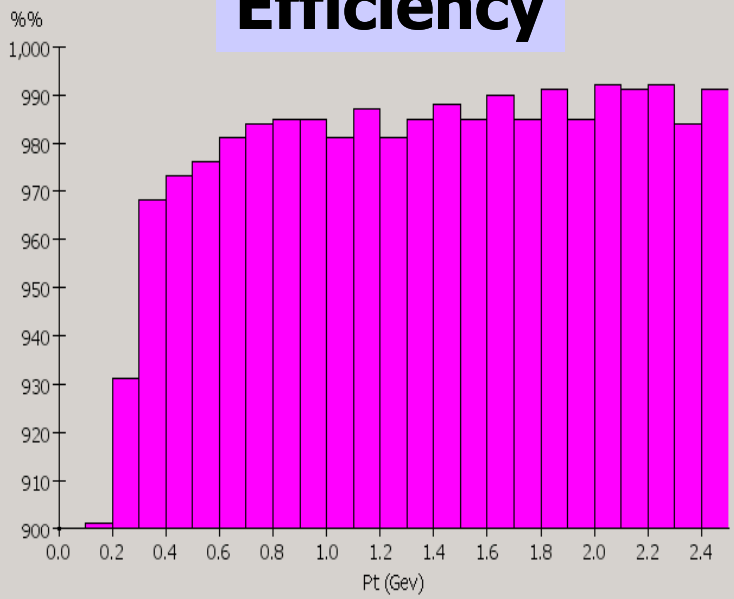

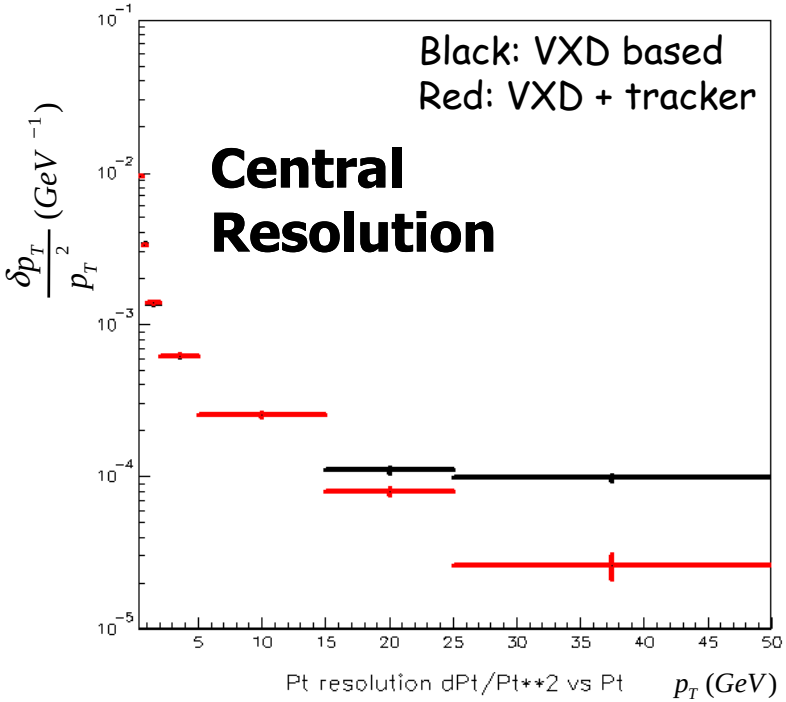

http://www-sid.slac.stanford.edu/

EM Calorimeter

- **Statistics**
  - 20/10 layers, 2.5/5 mm W
  - ~ 1mm Si detector gaps
  - Tile with hexagonal 6” wafers
  - 5x5 mm^2 pads
  - ~ 1300 m^2 of Si
- **Readout with KPIX chip**
  - 1024 channels, bump-bonded
  - 4-deep buffer (low occupancy)
  - Bunch crossing time stamp for each hit

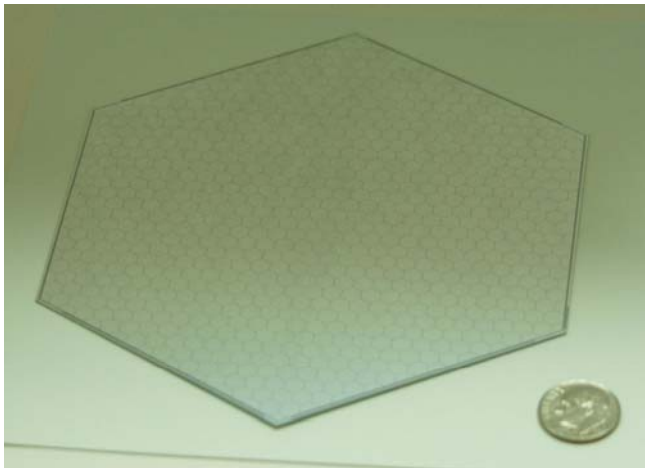

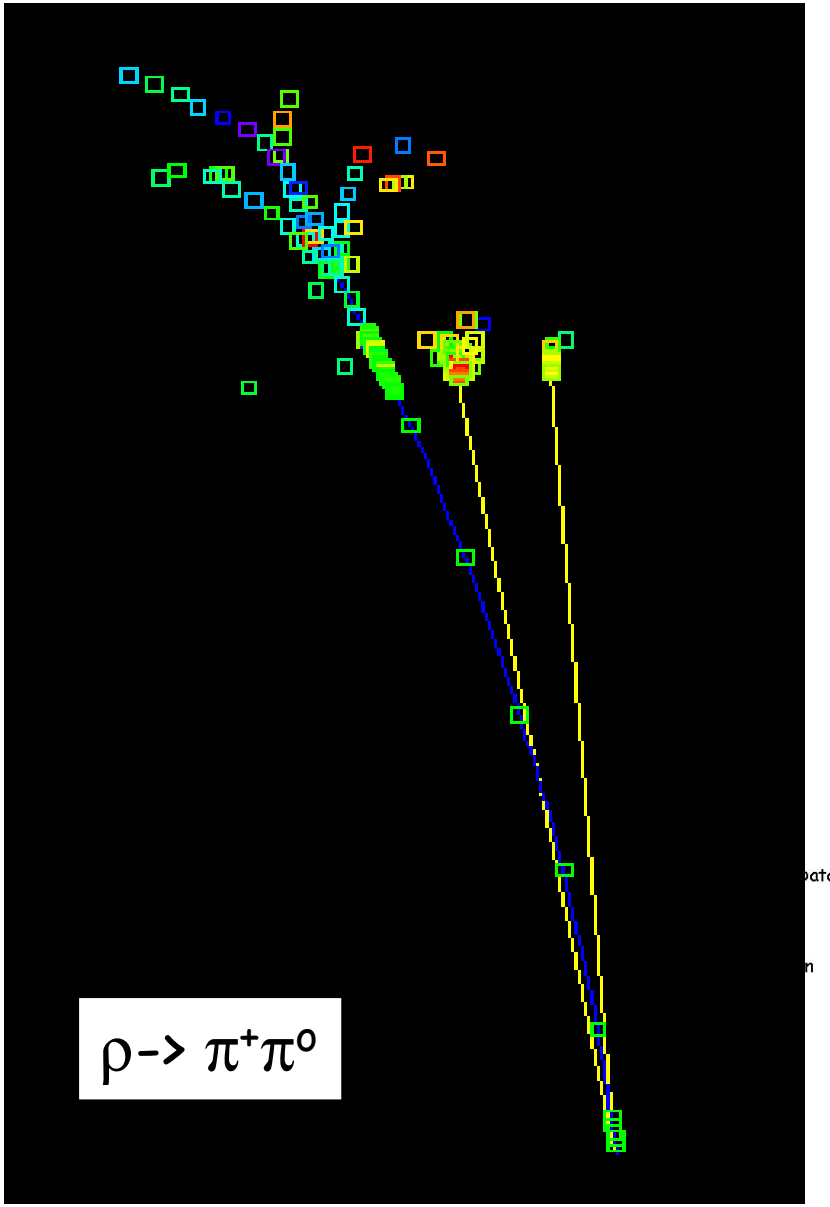

http://www-sid.slac.stanford.edu/

HCAL Considerations

- **Baseline**
  - Gap size <~10mm
  - Barrel: 34 20-mm SS absorbers → 4 λ_o
  - Two endcaps
  - Resistive Plate Chambers
  - Considering alternate technologies

Scintillator/Solid State

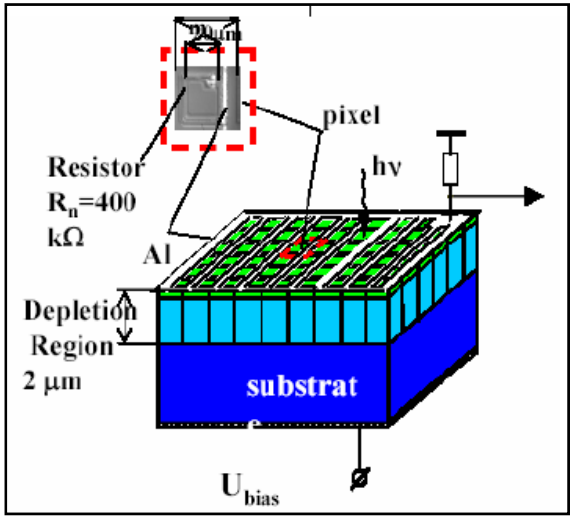

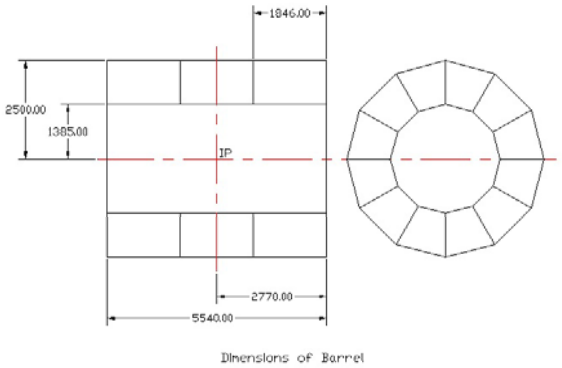

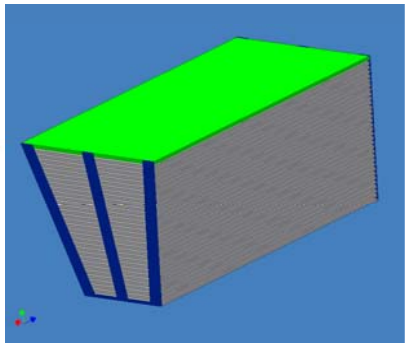

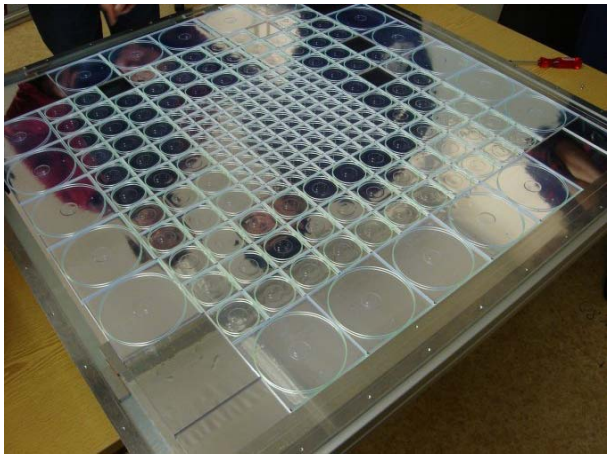

Solenoid

- **Statistics:**
  - **IR 2.5 m, OR 3.3 m**
  - **Length=5.4m**
  - **Stored Energy: 1.2GJ**
- **CMS-based feasibility study:**
  - **Same conductor**
  - **CMS (4 layer)➔ SiD (6 layer)**
  - **CMS 5 modules 2.5 m long ➔SiD 2 modules 2.6 m long**

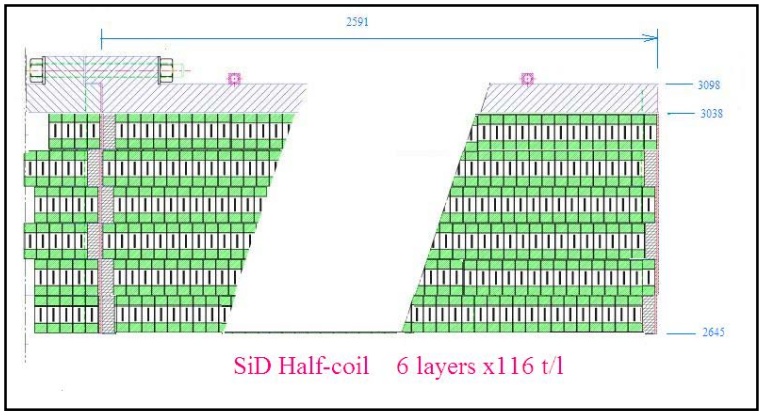

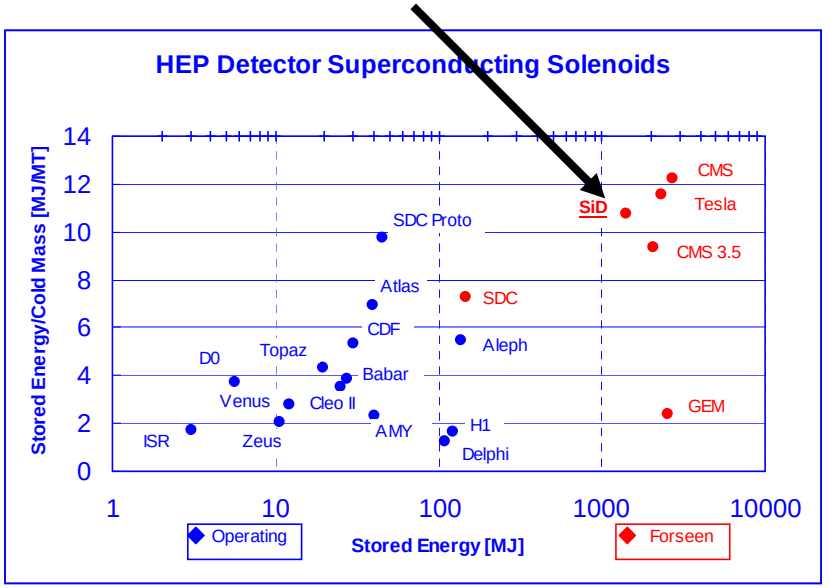

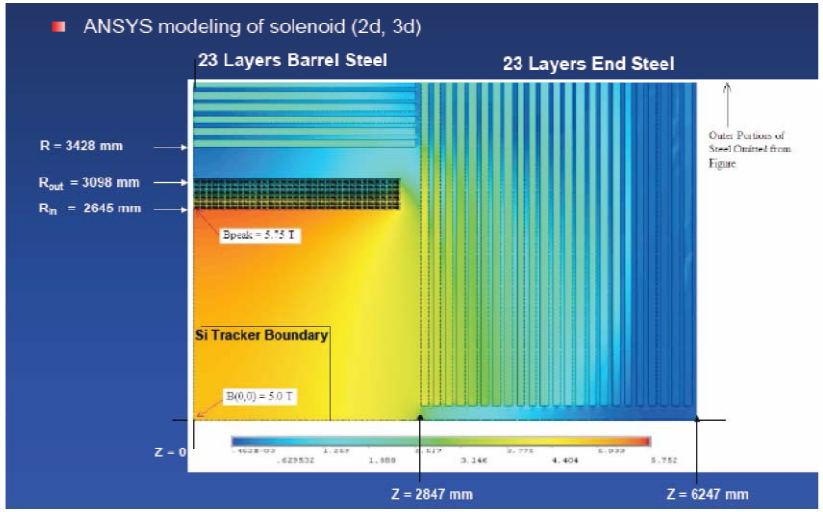

Uniformity good, stresses acceptable

http://www-sid.slac.stanford.edu/

Muon System

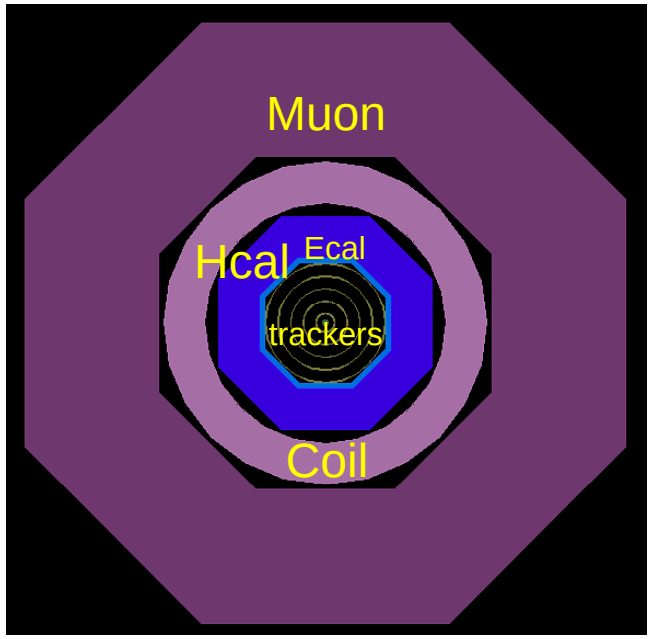

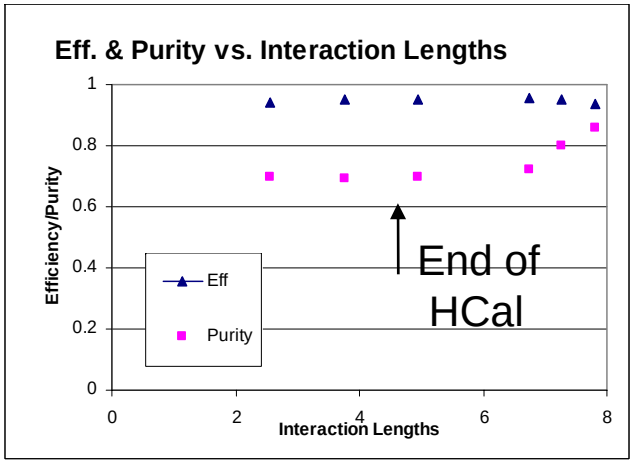

- **Muon System Baseline Configuration**
  - **Octagon: 48 layers, 5 cm thick steel absorber plates**
  - **Six-Eight planes of x, y or u, v upstream of Fe flux return for xyz and direction of charged particles that enter muon system.**
- **Muon ID studies**
  - **12 RPC- instrumented gaps**
  - **~1cm spatial resolution**
- **Issues**
  - **Technology: RPC, Scin/SiPMs, GEMS, Wire chambers**
  - **Is the muon system needed as a tail catcher?**
  - **How many layers are needed (0-23)? Use HCAL ?**
  - **Position resolution needed?**

http://www-sid.slac.stanford.edu/

Rewind: Technical Strengths

- **Generally: compact, highly integrated, hermetic detector**
- **Tracking:**
  - **VTD: small radius (5T helps)**
  - **Tracker: excellent dp/p; minimized material all cos(θ)**
  - **Demonstrated pattern recognition**
  - **Solenoid: 5T (difficult but not unprecedented)**
- **Calorimetry: imaging, hermetic**
  - **ECAL: excellent segmentation=4x4 mm^2, $R_{Moliere}$=13mm**
  - **HCAL: excellent segmentation: ~1x1 to 3x3 cm^2**
- **Excellent μ ID: Instrumented flux return & imaging HCAL**

Opportunities

- **Tracking**
  - VTD technology
  - Forward System
- **Calorimetry**
  - Choice of HCAL technology requires study, PFA evaluation. Overall Optimization:
    - Inner Radius
    - Depth and Length?
    - B field?
  - Forward systems challenging
- **Muon**
  - Technology?
  - Layers? (Boost HCAL)
- **Simulation & algorithmic tools**
  - Little mention
  - BUT there has been tremendous effort and many tools are in place) →
    - Detector studies and MC benchmarking can be pursued!
    - Overall integration studies needed

Concepts under Development for International Linear Collider

- Charge-Coupled Devices (CCDs)
  - demonstrated in large system at SLD, but slow
- Monolithic Active Pixels – CMOS (MAPs)
- DEpleted P-channel Field Effect Transistor (DEPFET)
- Silicon on Insulator (SoI)
- Image Sensor with In-Situ Storage (ISIS)
- HAPS (Hybrid Pixel Sensors)
- Macro/Micro Pixel Arrays

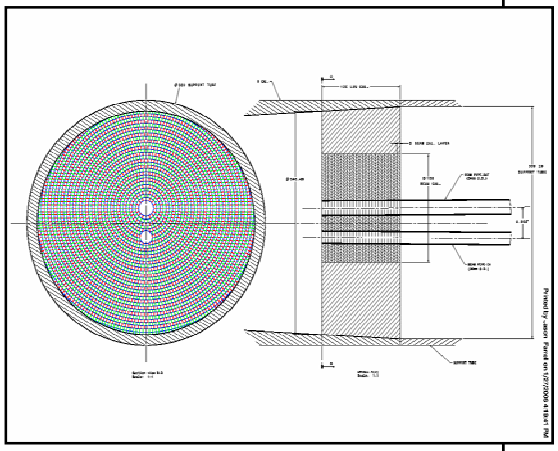

Looking Back a Bit &
The Way Forward

- **Silicon Detector Design Study Initiated Victoria ALCPG Meeting 2004**
- **Organization Fall-Winter '04-'05**
- **Progress on Technology, Simulation, Benchmarking, Cost '06**
- **Tools all in place for a workshop on optimization and choices, new ideas welcome – Fall '07.**
- **Final choices – Spring '08**
- **Letter of Intent – Summer '08**

Closing Comments

- **A silicon-centric design offering**
  - **unprecedented tracking precision**
  - **new potential in calorimetry**
  - **good muon identification**
- **Complementary to other concepts**
- **Many opportunities for new effort and expertise.**
- **Tools and organization in place to support efficient development and to get started.**
- **Great opportunity to explore ILC detector/physics.**
- **Open to new ideas, collaborators, increased internationalization**

- **Rich Partridge will discuss interplay between physics/detector projects and avenues for involvement on SiD.**
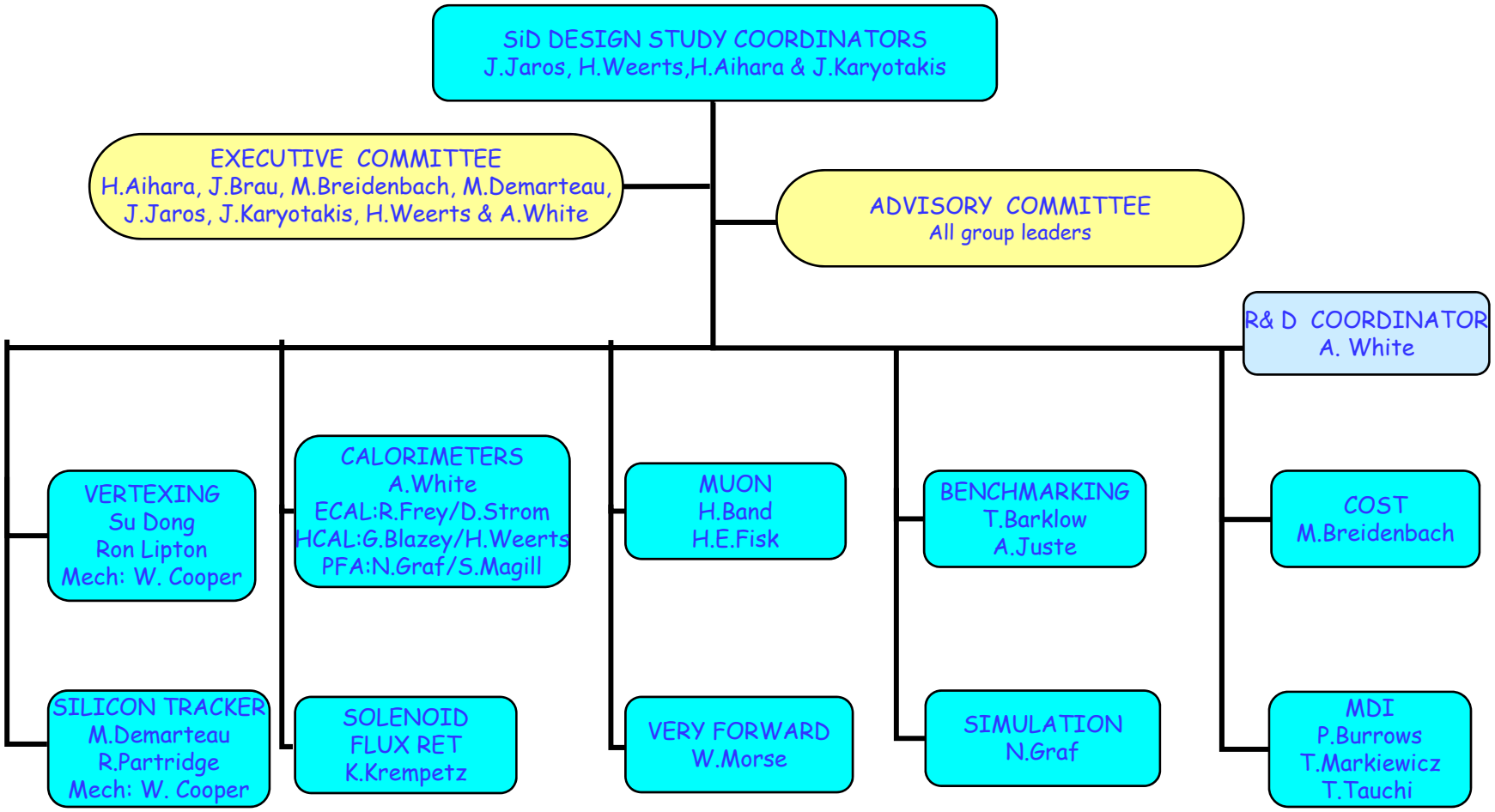
Organization