ILC
Value Management Workshop

Electrical Load Overview

NOMINAL ELECTRICAL LOAD TABLE

AREA SYSTEM	RF POWER	CONVENTIONAL POWER				EMER POWER	TOTAL (by Area)
		CONV	NC MAGNETS	WATER SYSTEMS	CRYO		
SOURCES e-	1.05	1.19	0.73	1.27	0.46	0.06	**4.76**
SOURCES e+	4.11	7.32	8.90	1.27	0.46	0.21	**22.27**
DR	14.00	1.71	7.92	0.66	1.76	0.23	**26.29**
RTML	7.14	3.78	4.74	1.34	0.00	0.15	**17.14**
MAIN LINAC	75.72	13.54	0.78	9.86	33.90	0.40	**134.21**
BDS	0.00	1.11	2.57	3.51	0.33	0.20	**7.72**
DUMPS	0.00	3.83	0.00	0.00	0.00	0.12	**3.95**
TOTAL (by System)	***102.0***	***32.5***	***25.6***	***17.9***	***36.9***	***1.4***	***216.3***

MW ***216.3*** **MW**

HV Distribution

345kv Transmission Line form Comm Ed.

Central Substation

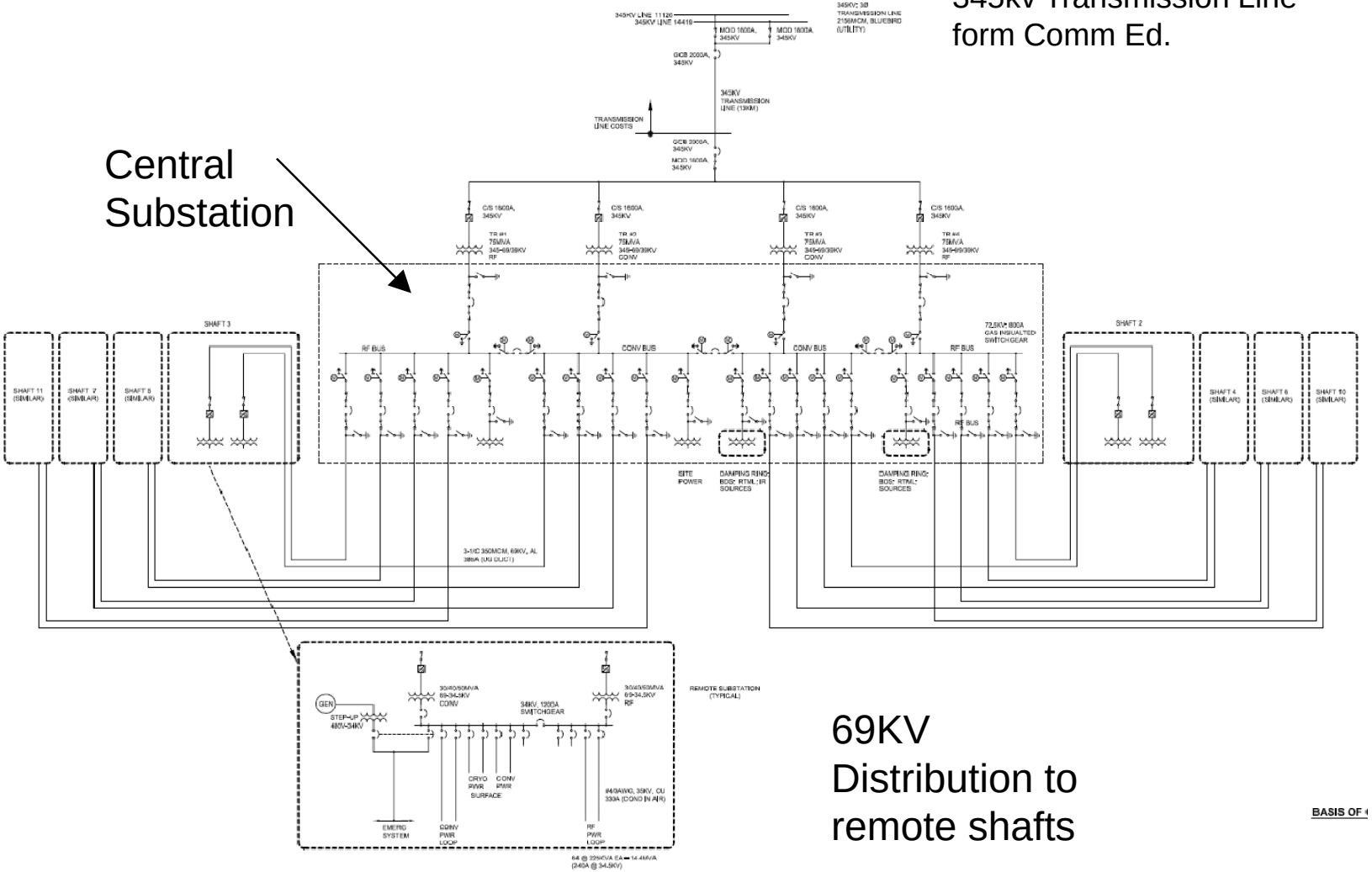

69KV Distribution to remote shafts

BASIS OF

RF Dist.

34.5 kv

DC Charging Supply

Pulse Transformer

Klystron

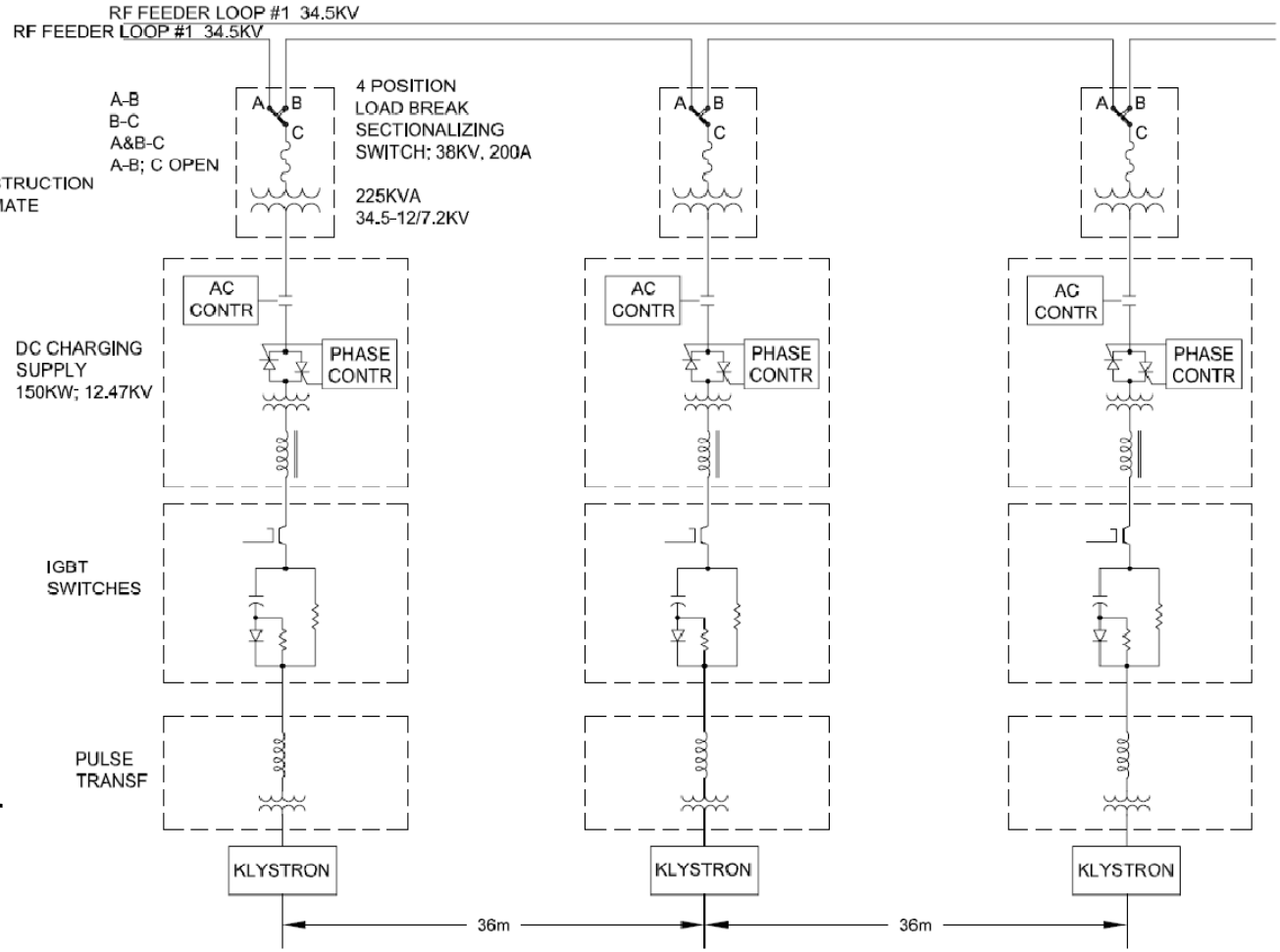

RF MODULATOR/KLYSTON
SINGLE LINE DIAGRAM
(TYPICAL & PARTIAL)
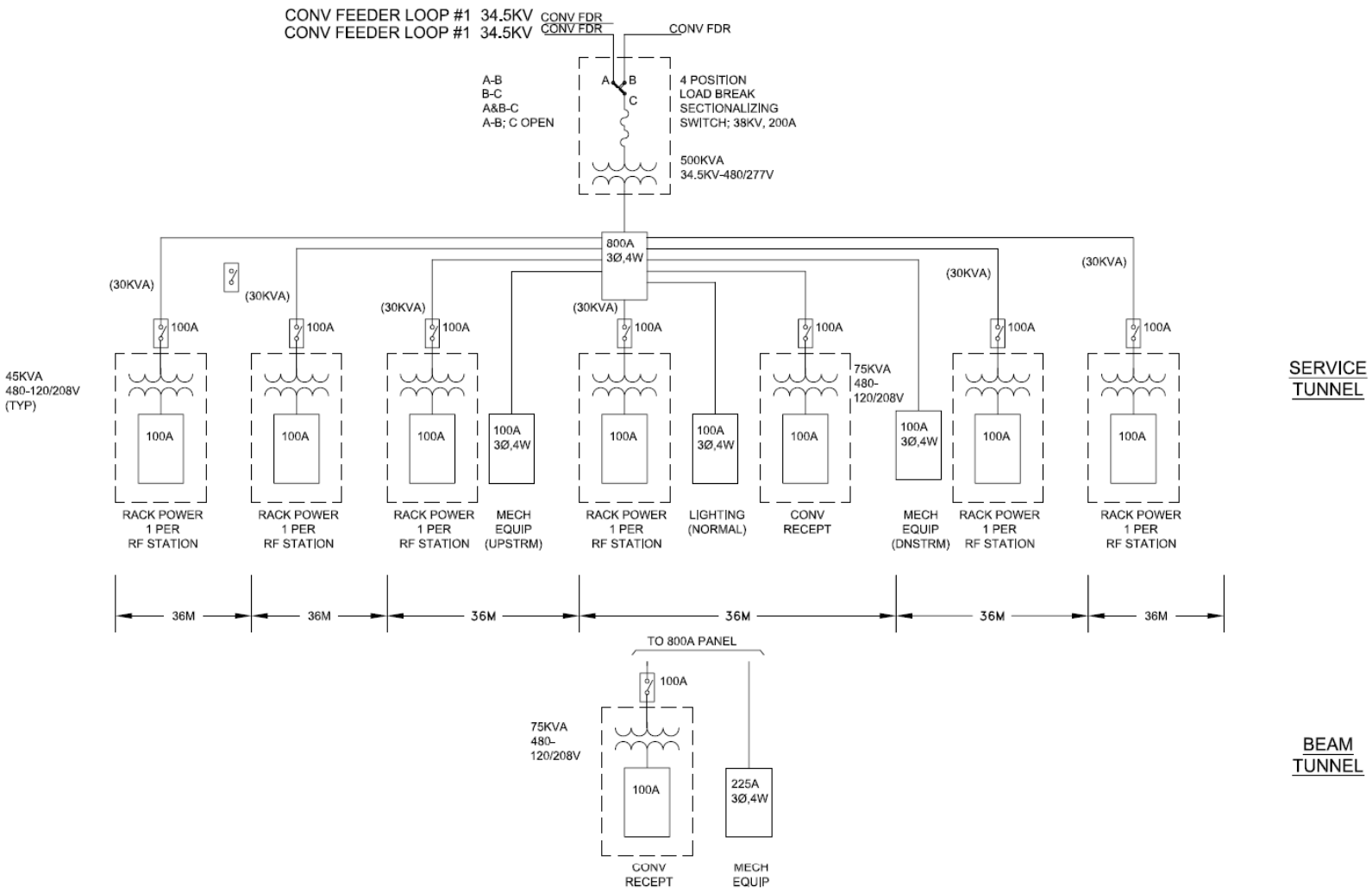
Conv. Power Distribution