IN2P3

Omega

STATUS OF SPIROC measurement

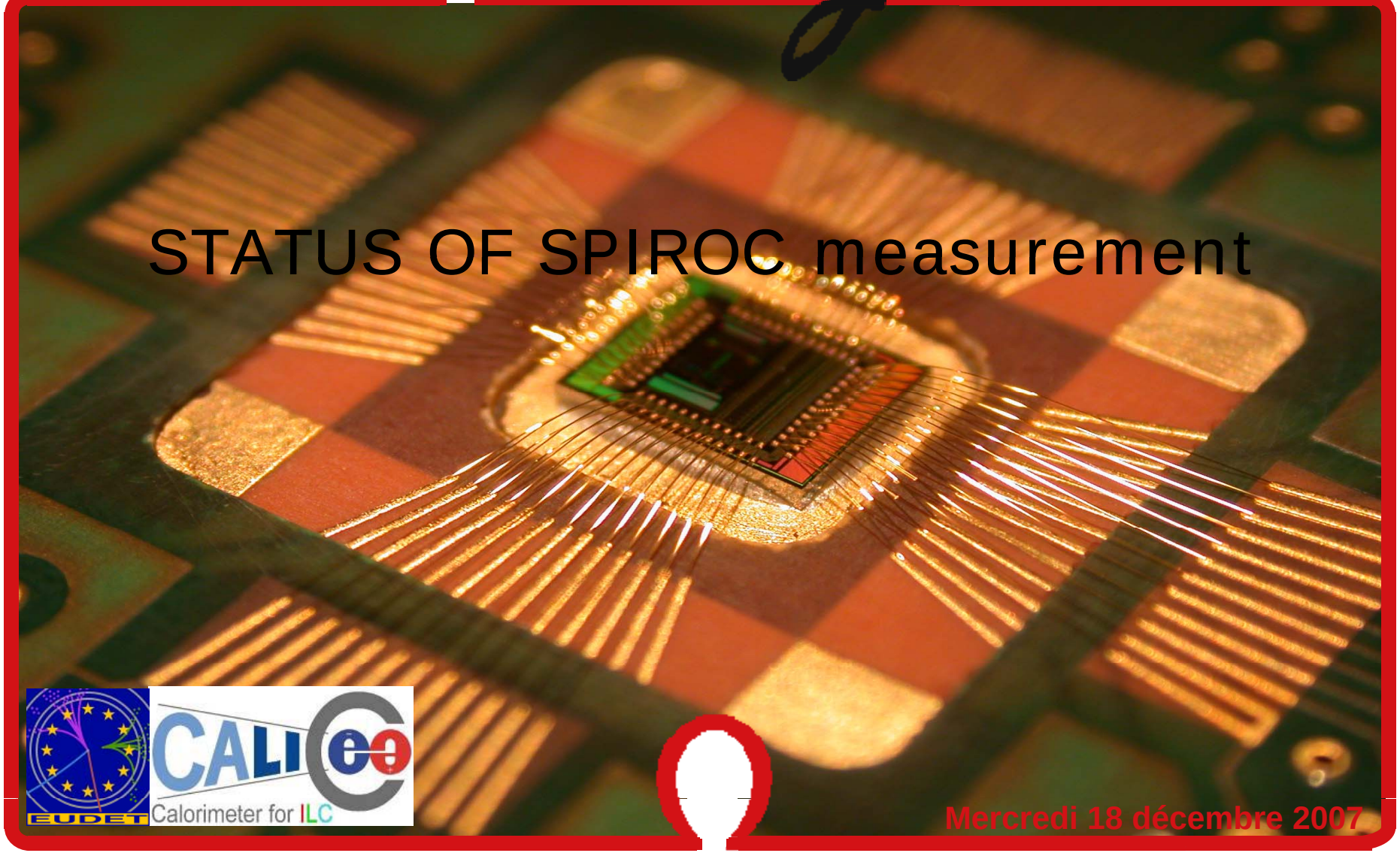

Mercredi 18 décembre 2007

Orsay MicroElectronic Group Associated

Reminder : Block scheme of SPIROC

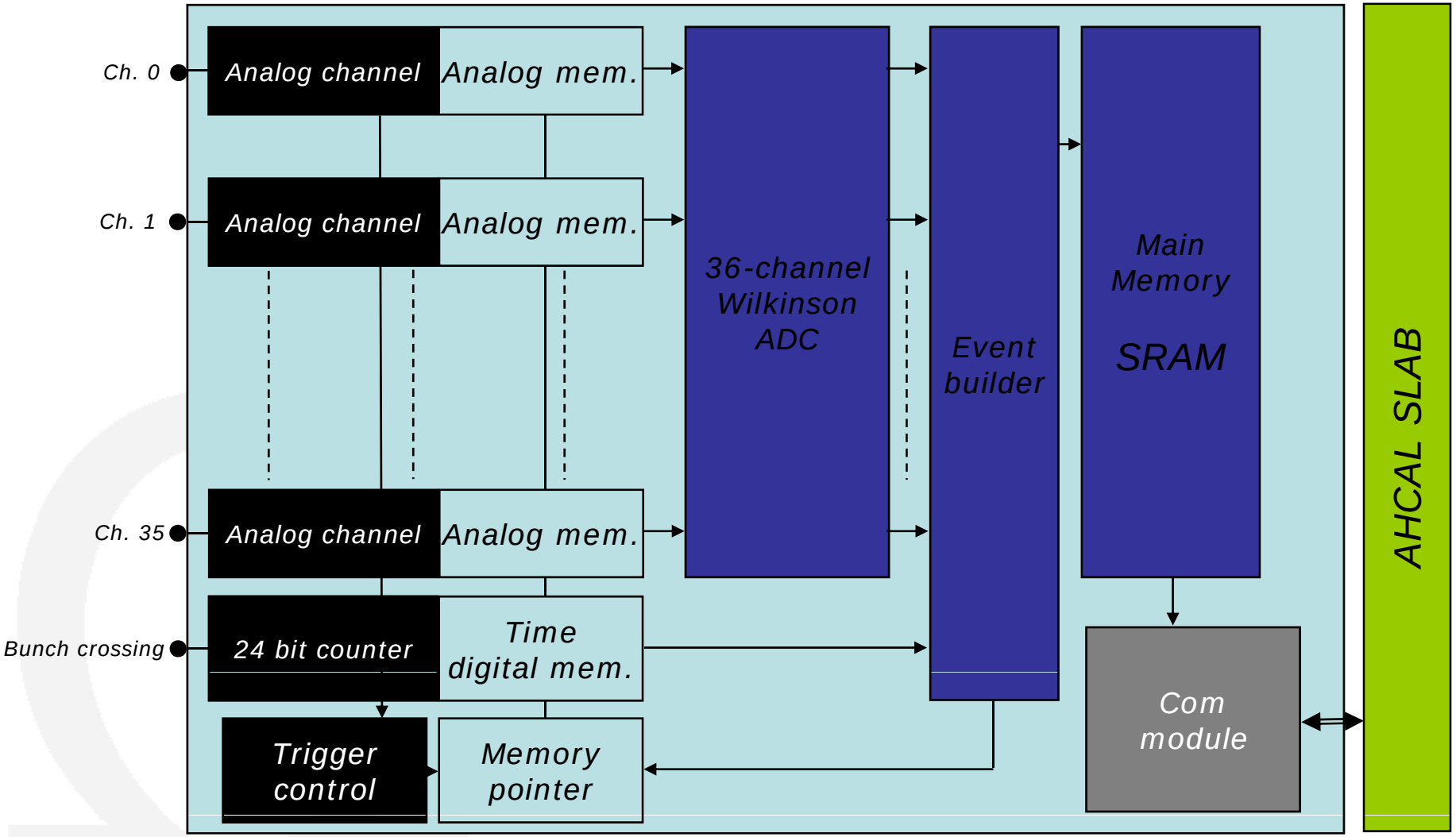

Reminder : One channel

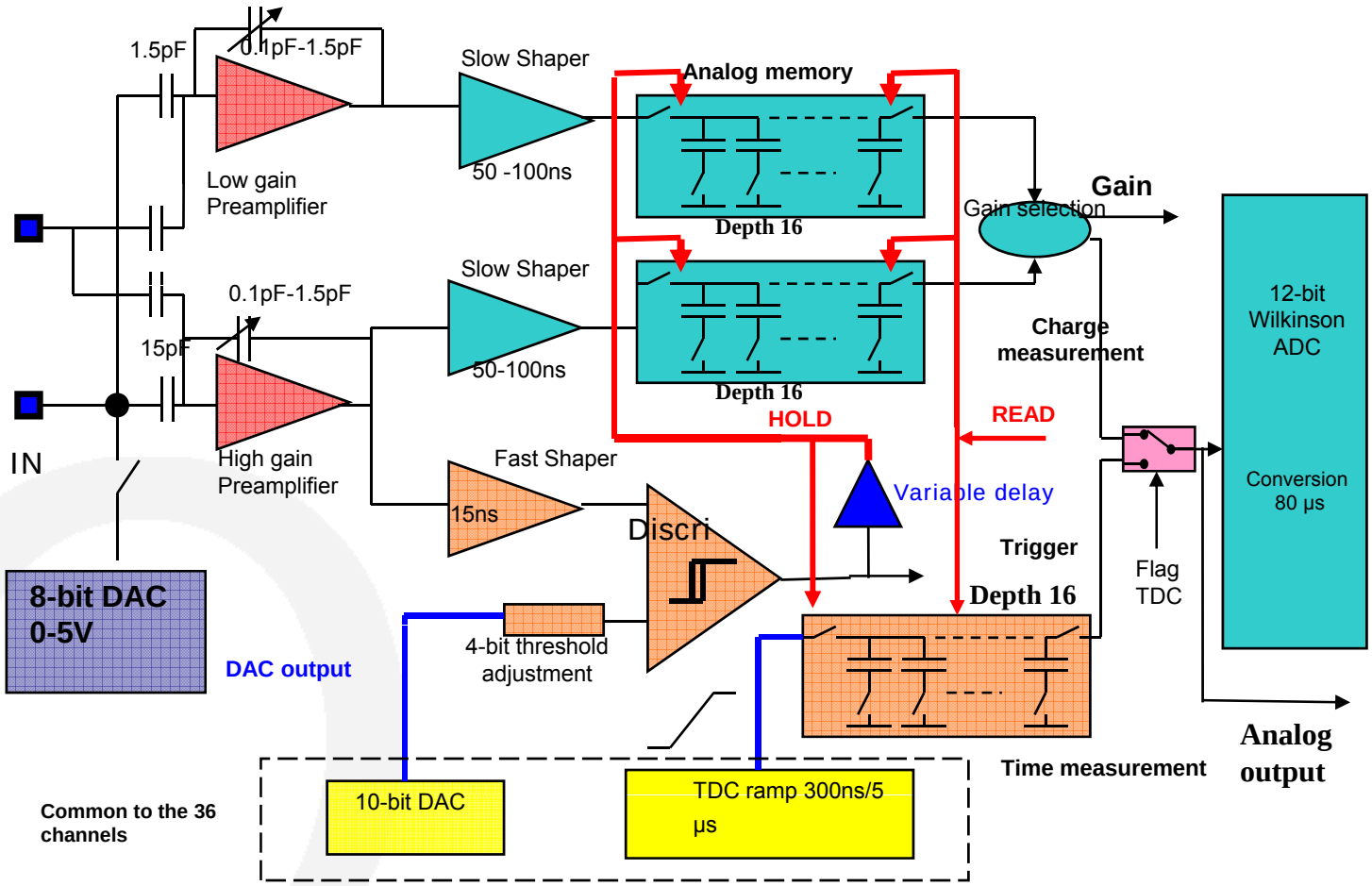

SPIROC : tested features

- Preamplifier
  - Preamp disable (DC coupled channel OFF)
  - Gain (from 100fF to 1.5pF)
  - Compensation capacitances
- Slow Shaper:
  - different time constant : 25ns-175ns
- Auto-trigger
  - Trigger with 40fC observed in measurement
- Power pulsing
  - Programmable stage by stage
- Calibration injection capacitance
- Embedded bandgap for references
- Embedded DAC for trig threshold
- Serial analogue output
- Probe bus for debug : not yet operationnal

First measurement

High gain channel output

680fC (~4 pe @SiPM gain=$10^{6)}$ in SPIROC

Charge measurement

Auto trigger

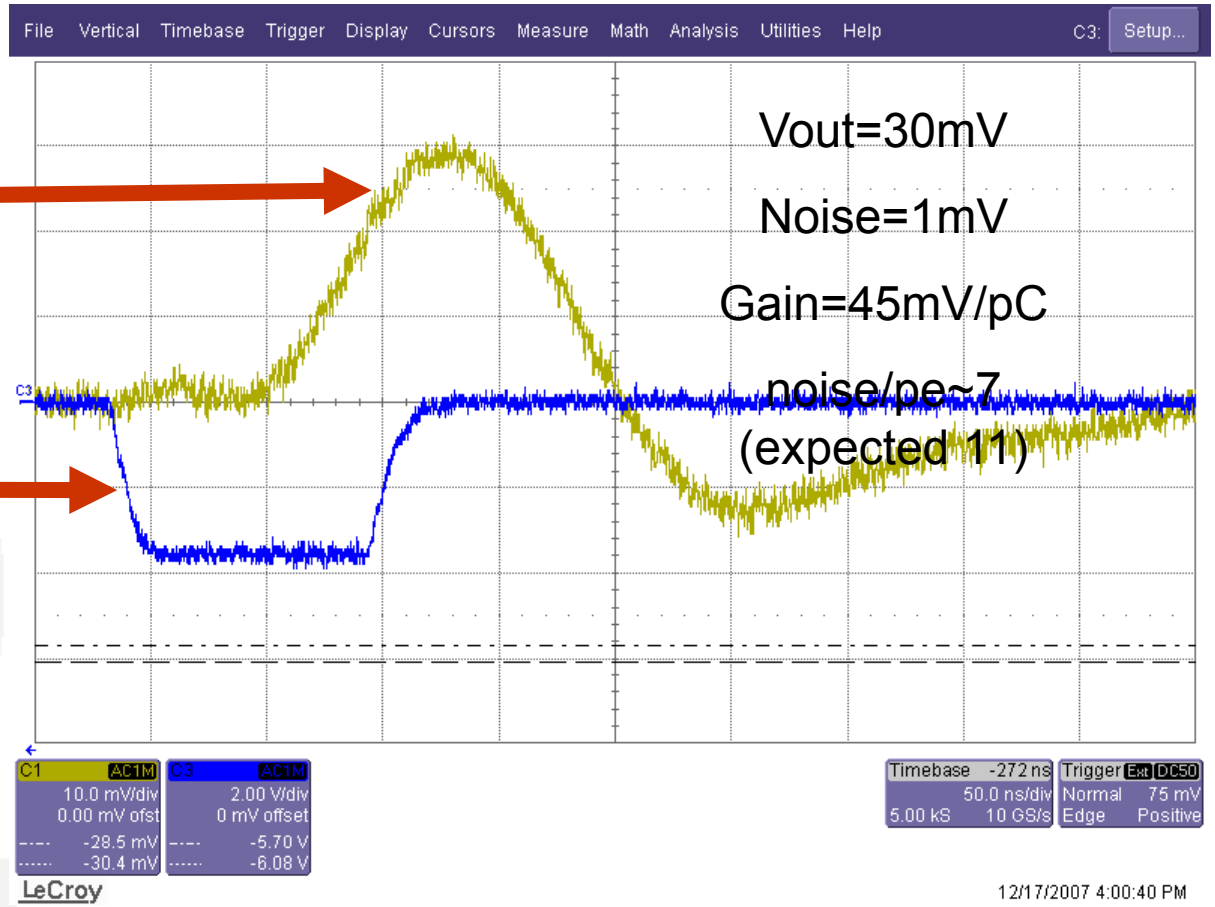

Set up:

Cf=400fF

Tau=50ns

Preampfier measurement

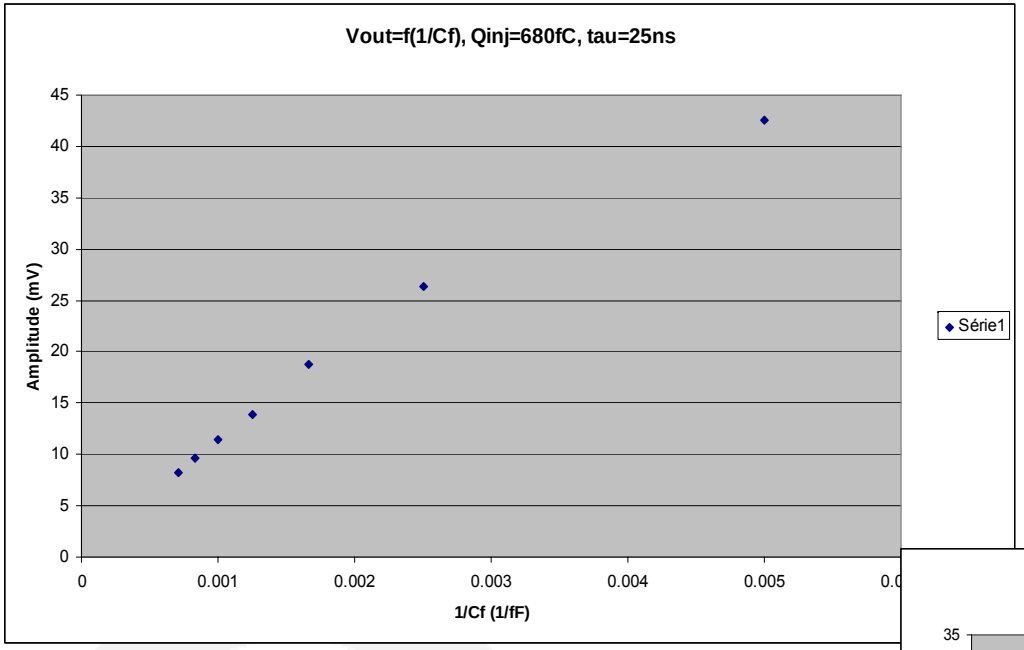

Qinj= 680fC (~4pe at SiPM gain of 10^6)

Cf (fF)	noise rms (mV) tau=25ns	noise rms (mV) tau=175ns	Vout (mV) tau=25 ns	Vout (mV) tau=175ns
200	1.2	2.2	42.6	32.5
400	1.0	1.3	26.3	18.7
600	0.92	1.15	18.8	13.2
800	0.9	1.0	13.9	10
1000	0.9	0.95	11.4	7.8
1200	0.9	0.9	9.6	6.6
1400	0..9	0.9	8.2	5.6

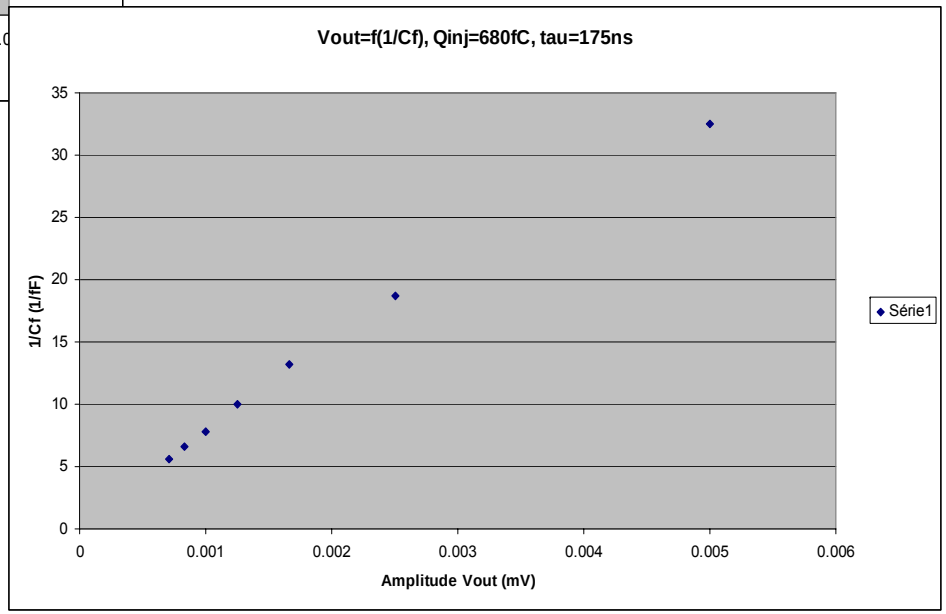

Pedestal dispersion

The pedestal measurement is coherent with what we expect :
-No pedestal pattern (random values according to statistical dispersion)
-Statistical dispersion equivalent to what we get with that technology

Standard deviation :
σ =1.8mV
peak-peak=8.3mV

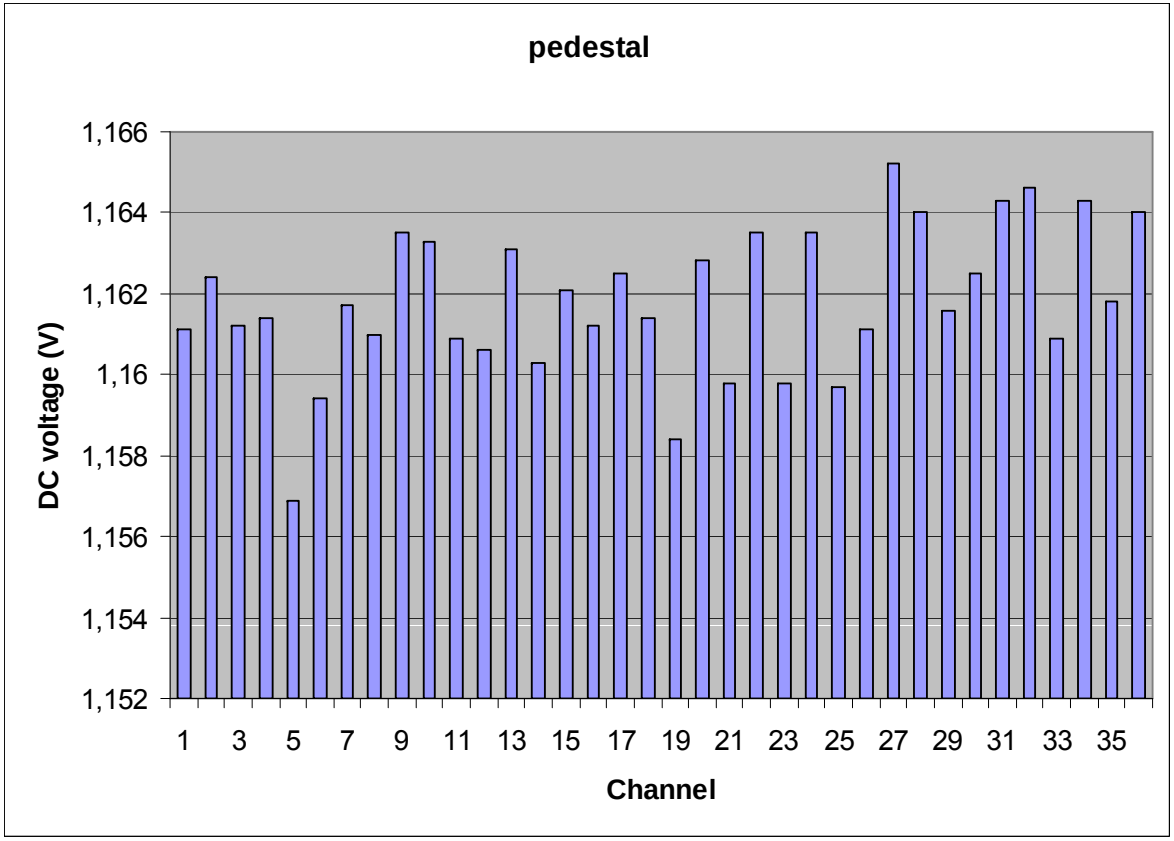

Input DAC linarity

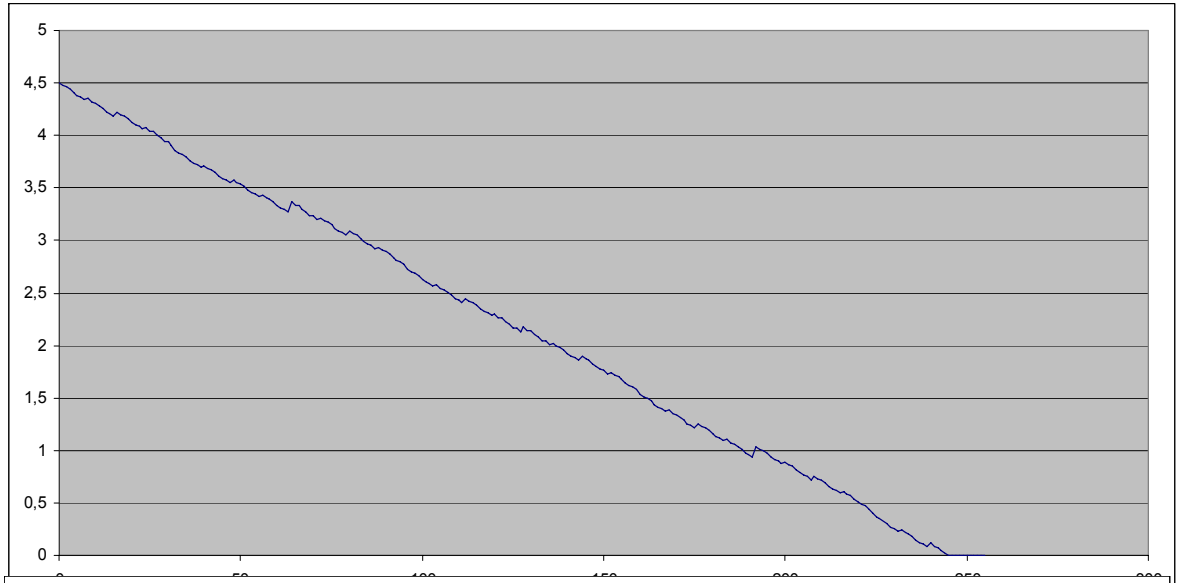

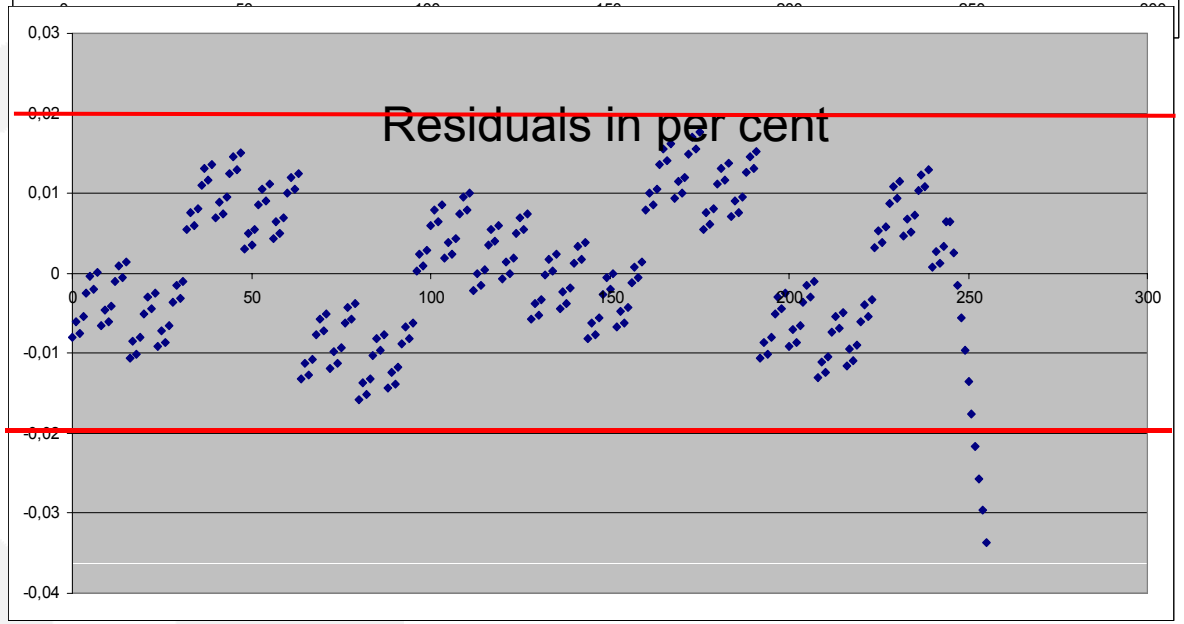

-/+2%

Conclusion

- SPIROC test have started and in progress

- Many features to be tested

  - Dynamic range
  - Linearity
  - Trigger efficiency
  - Crosstalk
  - DAC resolution (input DAC and threshold DAC)
  - ADC resolution
  - TDC resolution
  - Power pulsing & consumption
  - Digital part

  .....