Main Linac, Part 2

Chris Adolphsen

ML Session Overview

	Primary Session	Secondary Session	Other Groups
Monday	Cavities and Cryomodule		HLRF meet with CFS
Tuesday	HLRF/LLRF	Cryomodule Design Details	
Wednesday	SC Quad/BPM, Beam Dynamics and RTML	LLRF Studies at Flash	

Thanks to

S. Fukuda, C. Nantista for HLRF slides

J Carwardine, S. Fukuda, S. Michizono for LLRF slides

XFEL High Power RF Status

S. Choroba

RF High Power Source

Horizontal MBK prototypes

•Horizontal versions of MBKs by all 3 vendors are under construction (THALES, TOSHIBA, CPI)
•First klystron has been tested at DESY (Toshiba, December 07 to February 08)

THALES TH1802

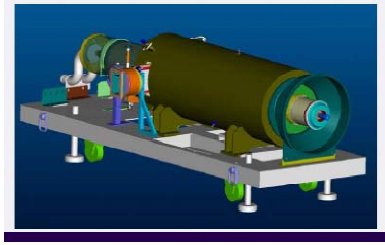

TOSHIBA E3736H

- #6 passed acceptance test at Thales, passed acceptance test at DESY
- (10MW, η=61%)
- #7 passed acceptance test at Thales, passed acceptance test at DESY
- (10.5MW on matched load, η=62%)

- 1 TOSHIBA E3736 at DESY
  - 10.4MW, 1.5ms, 10Hz, 66%
  - 750h, ~80% at full power
  - will be used at the modulator test stand in Zeuthen

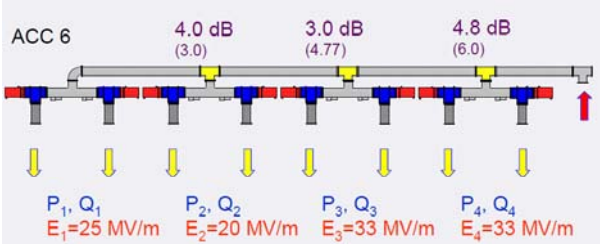

Modulator

Qualification of additional vendors

Bouncer Modulator by Imtech/Vonk

- Bouncer Type, as specified by DESY
  - 12kV HVPS
  - Bouncer 300uH/4.6kA
- 7st IGCT main switch
- Digital Regulation Circuit
- Analog In- and Outputs
- Well known and tested principle
- delivery time: 12 month

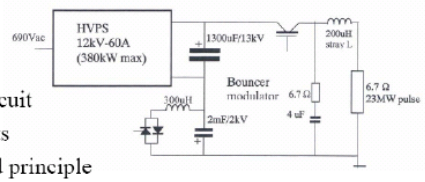

PSM Modulator by Thomson BM

- Different Type:
  - 12kV/2kA w. transformer
  - Pulse Width Modulation
  - 24 switching stages in series
  - FPGA based control
  - 2 stages for redundancy
- Slew rate and pulse shape controllable
- detailed description available, principle already successfully tested (worldwide, i.e. W7/X)
- delivery time: 14 month

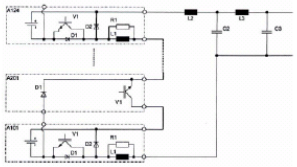

KEK HLRF Status and S1- global

S. FUKUDA

STF-1 is now under testing

Up to the end of November

- Coupler test and cavity test are performed
- 3 cavities go to 22MV/m
- 1 cavity goes to 32.9MV/m

HLRF Own Program from December

- Evaluation of Tree-type PDS with 3dB VTO
  - With Circulators
  - Without Circulators---LLRF vector sum control
    ---investigation changing the hybrid isolation
- Evaluation of Linear-type PDS
  - Optimization of QI by Adopting Reflector and Phase-shifter

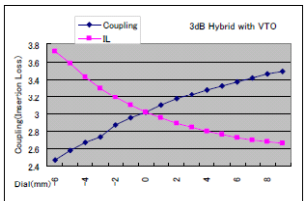

Phase-shifter 3

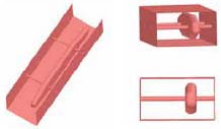

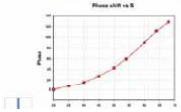

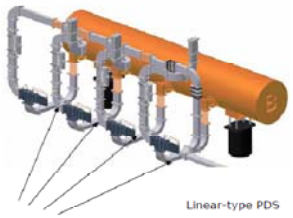

Linear-type PDS

Insertion of reflectors and circulators

•Variable QI
•Variable Power

- Expecting Cavities for S1-global
  - 2 Cryomodules with 8 Cavities
    - 4 from Asia including Ichiro Cavity(?)

      -> No coupler tuner (Fixed coupler), Power divider with VTO (+-10%?)
    - 2 from EU
      2 from US

      -> With coupler tuner, Power divider (SLAC VTO)

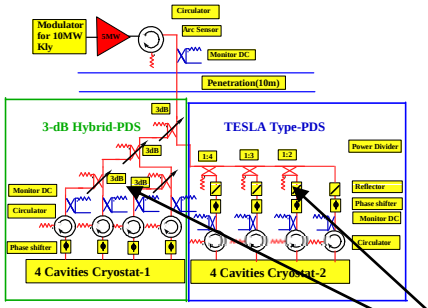

SLAC VTO

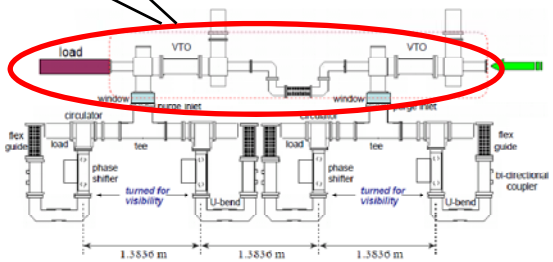

LSBK Development Status

Erik Jongewaard

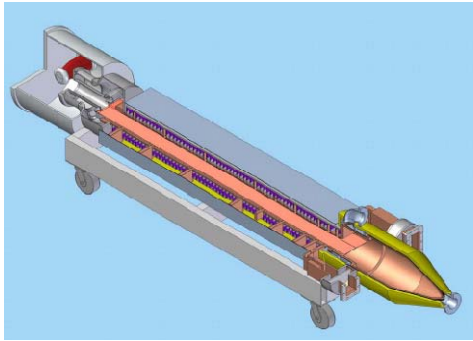

LSBK Program Plan

- Build a flexible beam test diode to verify 3-D gun simulations.
  - Beam profile measurement capability for electrostatic and magnetic focusing cases
  - Modular design to allow quick modifications and component changes
- In parallel develop a klystron to be fabricated immediately after the beam test diode.

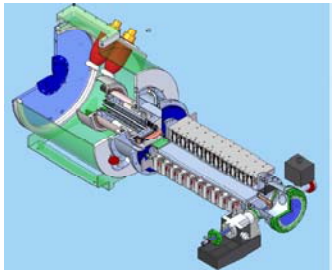

Beam, RF and Interaction Status

- Electron gun:
  - Simulations complete
- Beam Transport:
  - 3D magnetics design complete for diode
  - Klystron magnetics in progress
- RF circuit:
  - Cavity loading design complete
- RF-Beam Interaction:
  - TE mode discovered, studies underway for suppression

Mechanical Design Status

- Electron gun:
  - Three cathodes in house
  - FE machining in progress
  - Assembly beginning
- Anode assembly:
  - Brazed assemblies in final machining
- Beam diagnostic:
  - Sub assembly brazing complete
  - Assembly of vacuum chamber beginning
- Klystron design on hold for TE mode resolution

Development Status of the ILC Marx Modulator

Craig Burkhart

P1-Marx Status

- Developmental Testing in B015 Completed
  - Operational Testing
    - Full voltage (120 kV), current (140 A) and pulse length (1.6 mS) with coarse flattening
    - Full PRF (5 Hz)
    - Near full power (135 kW), load limit ~100 kW, HVPS limit ~120 kW
    - Several shifts without intervention
  - Arc-down Testing (Simulated Klystron Arc)
  - Integrated into "Sealed" Enclosure
- Install in L-Band Test Station in ESB for Extended Life Tests
  - Marx Control System Upgrades: EPICS interface
  - L-band Test Stand Interlocks and Control
- Improve Output Voltage Regulation to ±0.5%
  - Vernier Regulator

Normal Operational Testing

- Coarse Pulse Flattening
  - 16 Cells: 11 prompt, 5 delayed
  - 0.86 kΩ water load
- Efficiency Measurement
  - Total power efficiency: 97%
  - Usable (RF) efficiency: 92%

Fault Testing: Load Arc

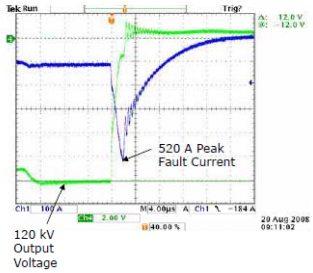

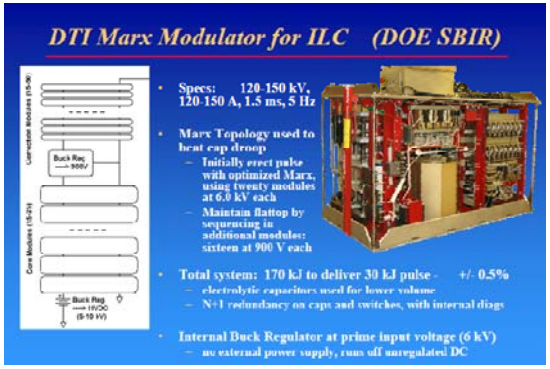

Marx Program Status Summary

- SLAC P1-Marx
  - Developmental Testing: Complete
  - Initial ESB Operation: 11/08
  - Integration into L-Band Station: Early '09
  - Output Regulation (±0.5%): 3/09
- SBIRs
  - Complete '09
  - Hardware to SLAC: FY10
- SLAC P2-Marx
  - Initial Design/Components Ordered: 12/09
  - 1st Cell Assembly & Testing: FY09-Q2&3
  - Multi-Cell Testing: FY09-Q4
  - Final Design/Components Ordered: FY10-Q1
  - Cell Assembly: FY10-Q2
  - Modulator Testing: FY10-Q3&Q4

HLRF Interlock Module and ATCA* Platform R&D Plan

Ray Larsen

Summary Status & Plans

- VME Interlock System
  - F3 FPGA based test stand interlock system in test, hardware installation continuing, interlock software nearing completion
- VME-ATCA Adapter
  - Board loading underway; will need IPMI, driver software development to complete
  - Reference design for future AMC carrier board
  - Future: Implement ATCA adapter version of test stand interlocks
- AMC's in MicroTCA promising for future controls upgrade
  - Commercial AMC, IP products can perform most SLAC linac controls functions
  - Collaborating with DESY to get fast ADC Firmware
  - Plan initial experimental tests in FY 09
- *Future:*
  - *Port controls designs directly to generic AMC FPGA modules with front-end plug-in options*
  - *optimize use of xTCA infrastructure over more payload modules*

*Advanced Telecom Computing Architecture

Modular 2-Cavity PDS Unit for 1st FNAL CM

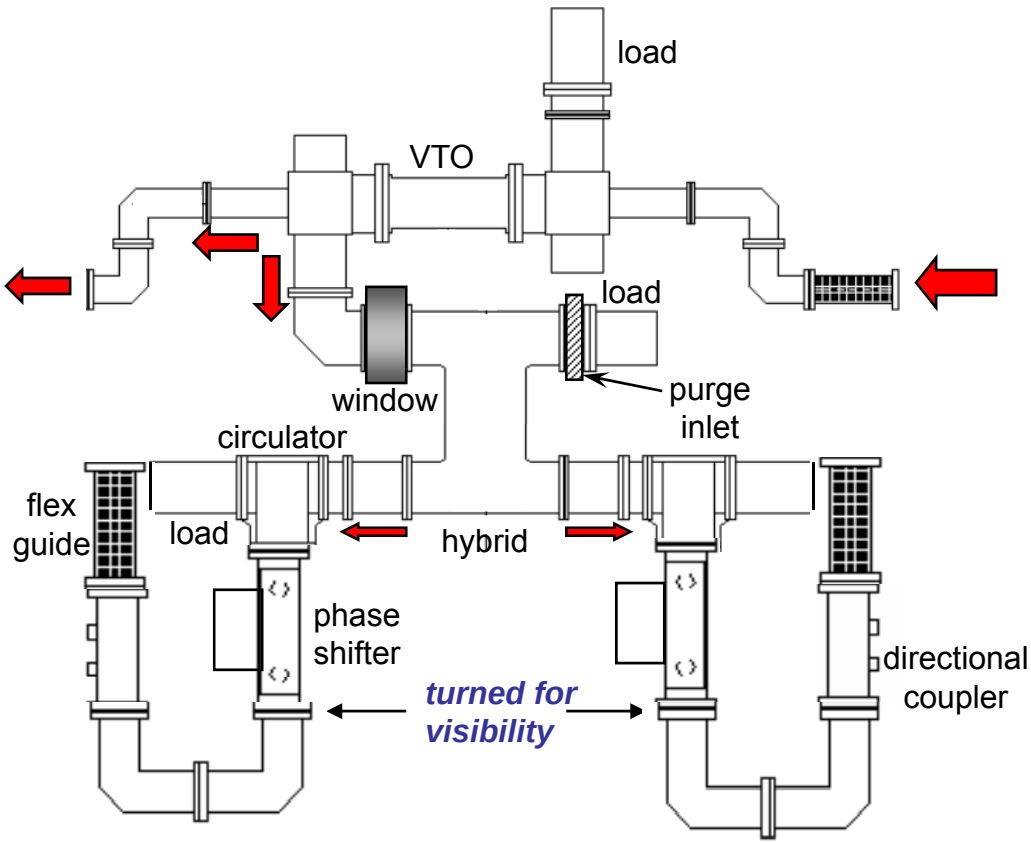

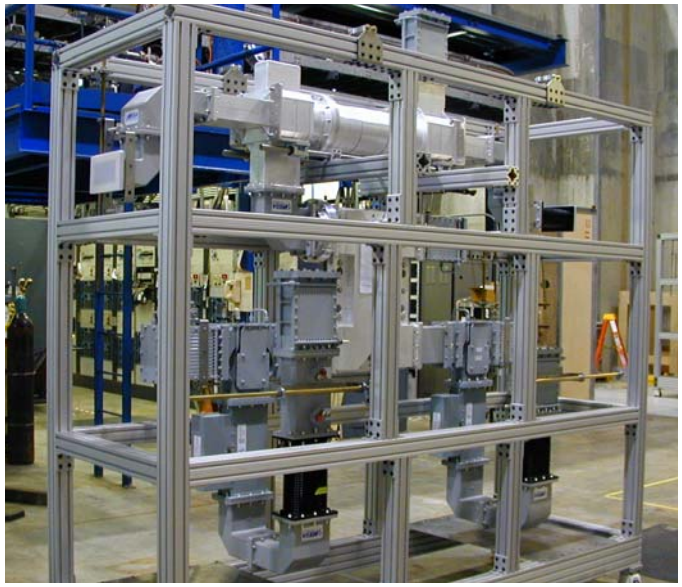

BENEFITS OVER LINEAR BCD:

- fewer types of splitters (2 vs. 9)
- power division adjustable by pairs (VTO)
- permits elimination of circulators (hybrid)

First (of 4) 2-cavity unit for ILCTA@NML CM-1 tested and delivered to Fermilab.
The other three are about to be high-power tested and shipped.

Klystron Cluster RF Distribution Scheme

Chris Adolphsen
Chris Nantista

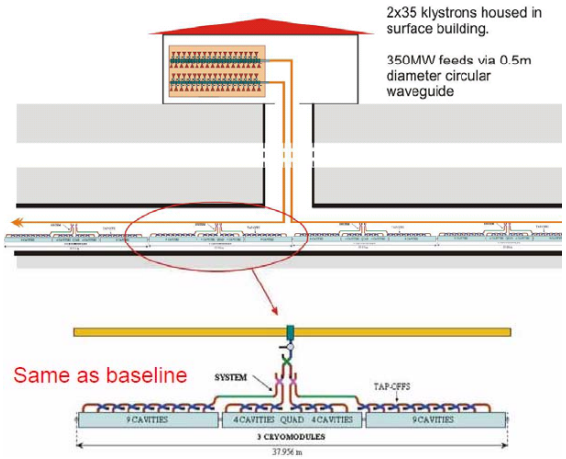

- RF power "piped" into accelerator tunnel every 2.5 km
- Service tunnel eliminated
- Electrical and cooling systems simplified
- Concerns: power handling, LLRF control coarseness

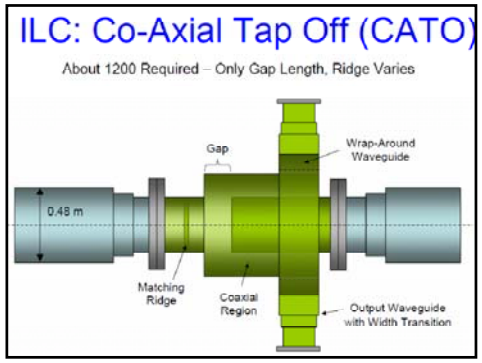

Concept Development Steps

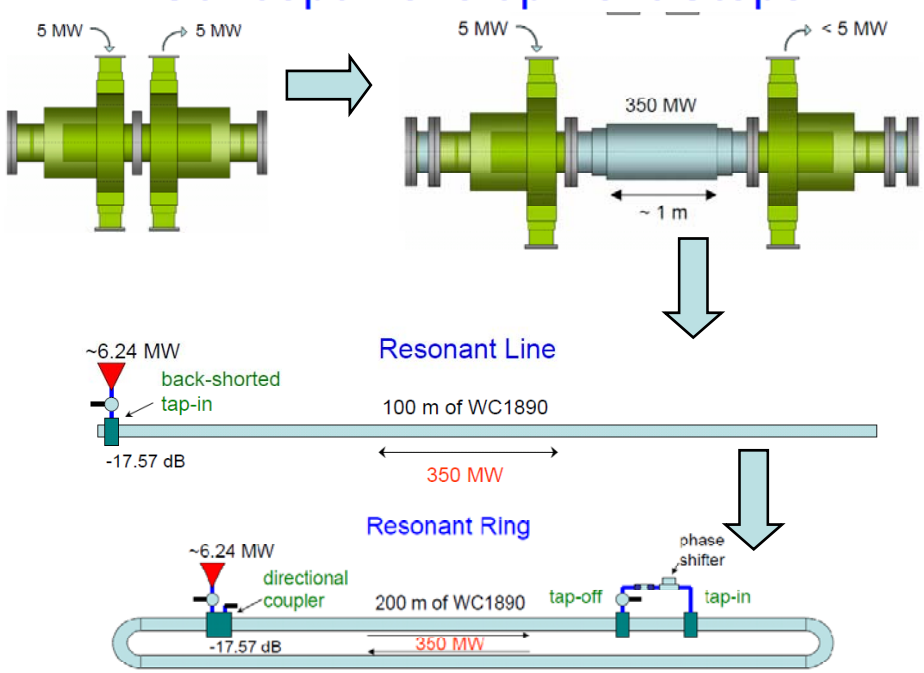

Summary

Surface klystron clusters can save ~ 300 M$ (~ 200 M$ from eliminating service tunnel and ~100 M$ from simpler power and cooling systems).

The GDE Executive Committee encourages R&D to pursue this idea.

The proposed CATO tap in/off design is likely to be robust breakdown-wise. Have a plan to demonstrate its performance, although with only 1/5 of the worst case ILC stored energy after shutoff.

Need to better study:

Waveguide fabrication and tolerances – too large to be drawn, but don't want seams (KEK working with industry on this).

Bend design – mode preserving; low-loss; support 350 MW, 1.6 ms; compact enough for tunnel

Impact on LLRF control, energy spread minimization, & efficiency.

Modifications to accelerator tunnel to accommodate waveguide plus other systems from tunnel systems.

Extractors for super-pipe

S.Kazakov

Super-pipe scheme

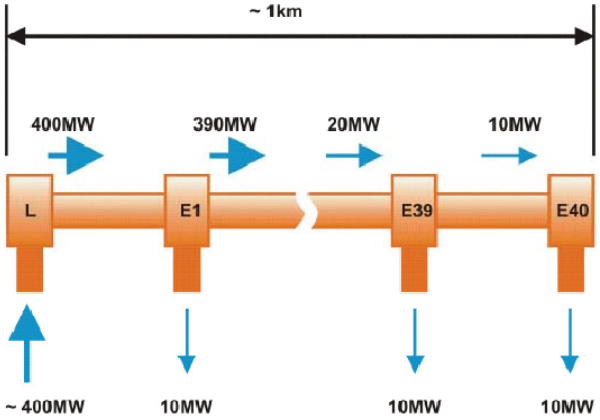

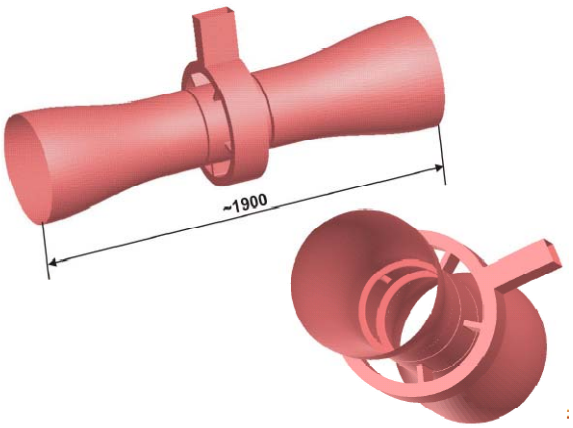

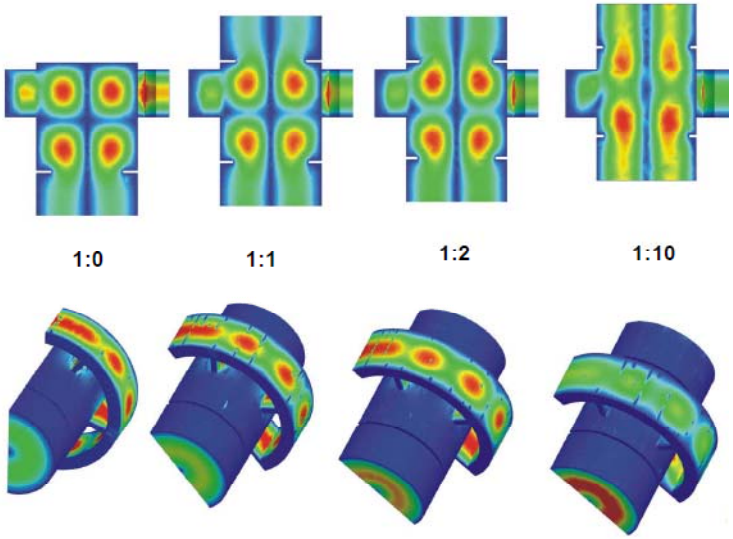

Conclusion:

1. It seems that big number of extractors with different extraction ratio can be made using only few identical wrap around geometries.

2. Tasks for the nearest futures are to find optimal number of groups and optimal geometries.

Distributed RF Source (DRFS) Scheme

One Klystron feeds power to a few cavities.

S Fukuda

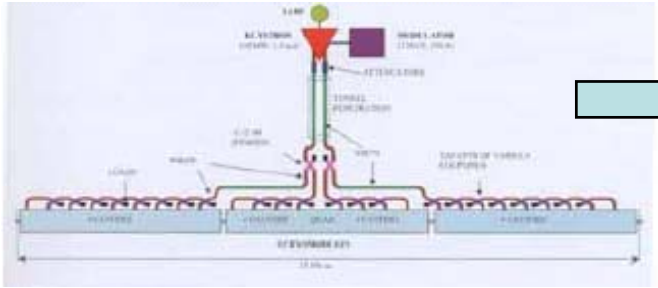

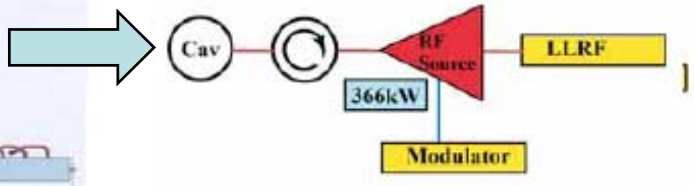

Total amount

X 26 X 650
=16900

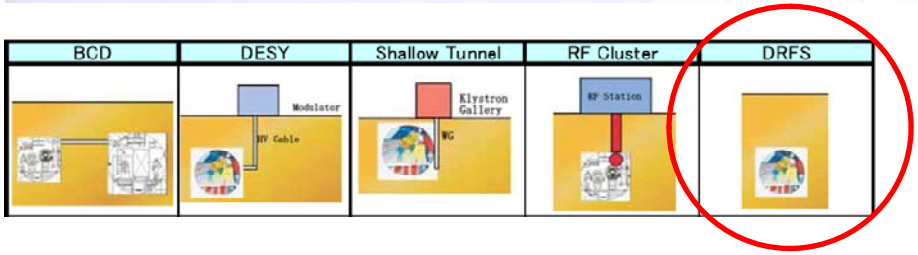

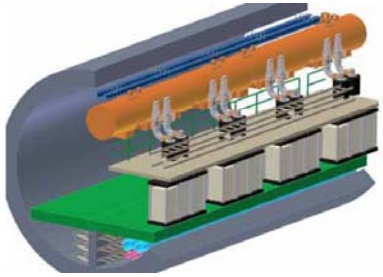

There are several merits in DRFS.

- Complete single tunnel scheme and simple configuration. (Cost benefit is expected)
- Klystron failure doesn't give a serious effect to beam operation since failures are scattered. (cf. BCD, RF Cluster)
- Adoption of MAK leads to the cheap HLRF system and introduction of power handling is possible for klystron.
- Direct connecting of about 60kV to klystron eliminates pulse transformer and use of huge insulation oil.
- LLRF control is easy and vector sum of 2 cavities are better than BCD plan.
- By coupling two cavities with same performance, circulators are possibly eliminated.
- There are lots of advantages for the operation and control.

Likely Plan

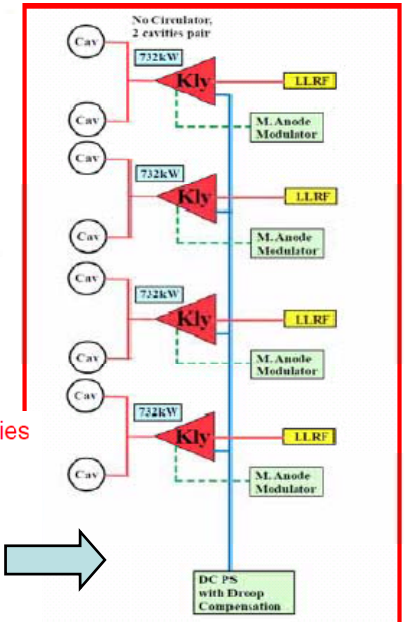

- Circulator elimination by power feeding to 2 cavities from one klystron. Output power is 732kW.
- Modulated Anode Klystron (MAK) is adopted.
- Anode modulation pulser does not need the high power and cost efficient pulser is manufactured.
- DC Power Supply is common for 26 cavities and voltage drop during the pulse is compensated with appropriate circuits at the level that LLRF can feed back.

Cost estimates being made

LLRF Comments on the RF cluster and Distributed RF schemes

Shin Michizono (KEK) Brian Chase (FNAL) Stefan Simrock (DESY)

Comparisons of LLRF Configurations

	Baseline	Single tunnel	Klystron cluster	Distributed rf
No. of tunnels	2	1	1	1
LLRF unit	Service tunnel	Beam tunnel	Beam tunnel	Beam tunnel
Cavity/ rf unit	26	26	780	1 or 2
No. of vector sum	26	26	780	1 or 2
No. of llrf cable /rf	~80	~80	~80*30 or fast optical cables	3 or 6
Loop delay	~1 us	~1 us	~10 us	~0.3 us
Typical FB gain	~100	~100	~20	~1,000
QI and power distribution control	Necessary	Necessary	Difficult	No need
Each cavity field flatness	Bad	Bad	Worse	Best or better
Robustness	Good	Good	Not good	Better
Exception handling	Not easy	Not easy	Quite complicated	Easy

TTF/FLASH 9mA Experiment
Recent Machine Studies and Results

John Carwardine, Gustavo Cancelo, Nick Walker

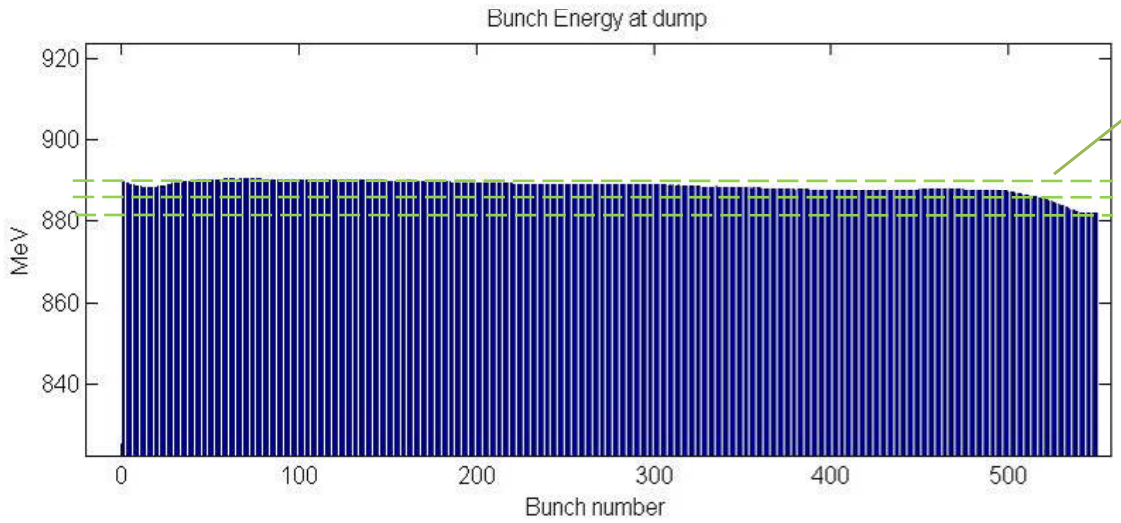

10 MeV over 550 bunches
(~1%)
(~4 MeV over 1st 500)

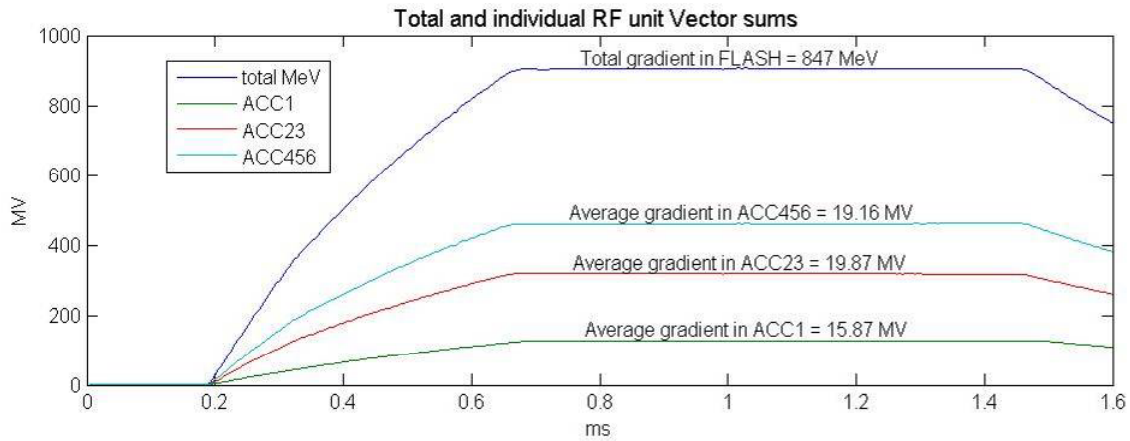

Stable operation with 450 bunches
- Several hours of data
- Currently under analysis

Long bunch trains (~2.5 nC/bunch)
- 550 bunches at 1MHz
- 300 bunches at 500KHz
- 890 MeV linac energy

All modules (RF) running with 800us flat-top and 1GeV total

Increase from 450 to 550 bunches eventually caused vacuum event

Developing Common Metrics and Models for RF Overheads

Brian Chase

Power Requirements Based on Maximum Gradient and Maximum Beam Current

- Peak power is only required at peak gradient and beam current
- Goal: Meet design requirements with minimal power overhead (cost)
- Could operation ever go outside of the design operation region?

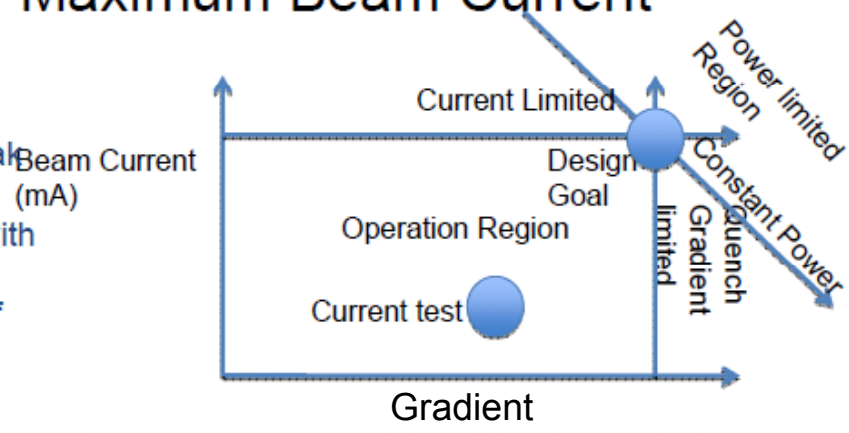

- 3mA test – beam energy data
- 9 minutes of operation

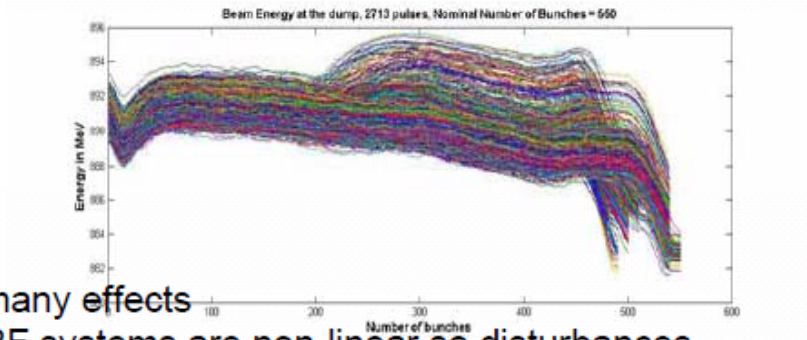

- Data sets are complex sums of many effects
- Many aspects of the cavity and RF systems are non-linear so disturbances inter-modulate
- Operating point is at only a fraction of 10MW
- Will take some work to fully analyze

Vector Sum Amplitude w/o Beam

Shilun Pei and Chris Adolphsen

FB Off / AFF Off / No Beam

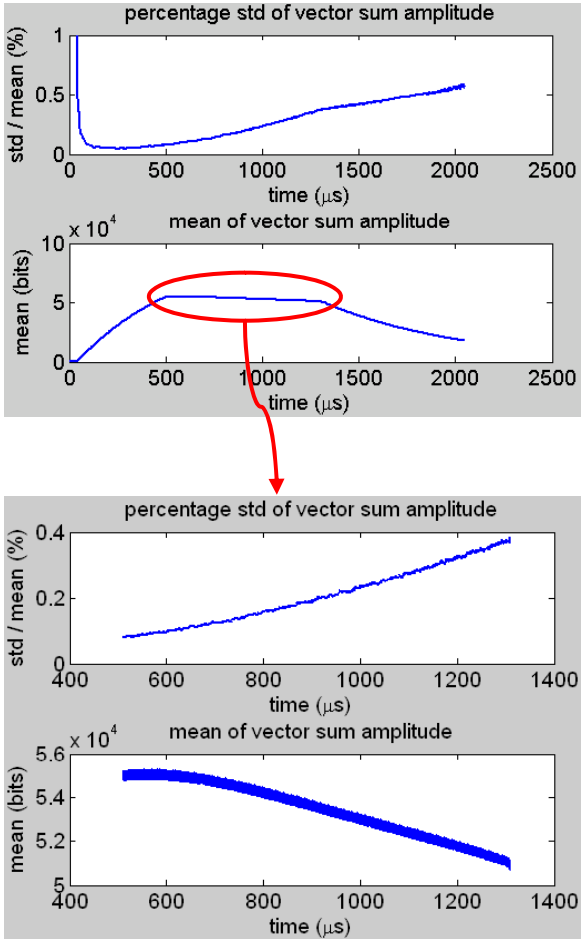

FB On / AFF Off / No Beam

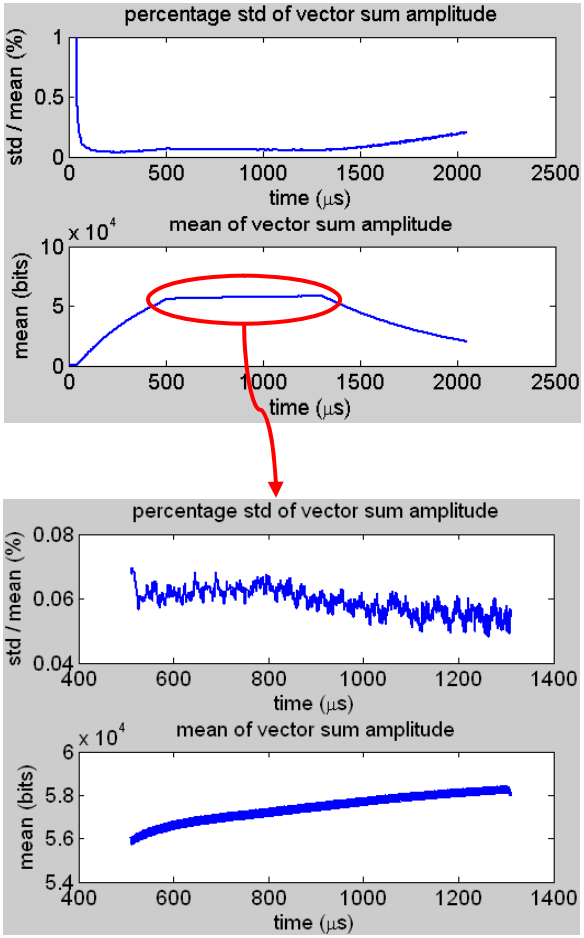

FB On / AFF On / No Beam

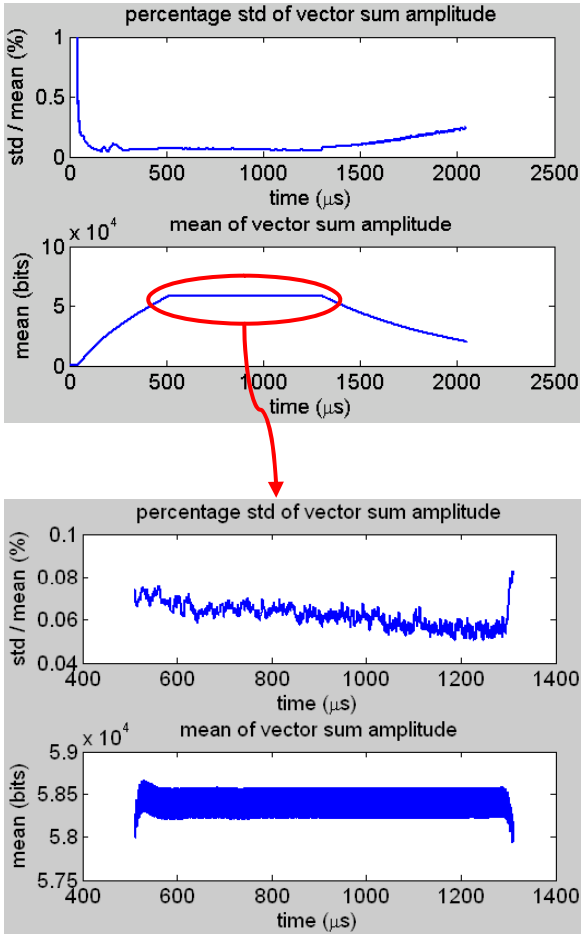

Flat top amplitude percentage standard deviation is decreased by factor 2-6.
FB can decrease the percentage std, AFF can flat the flat top amplitude.

Correlation of Jitter Amplitude RMS & Detuning RMS for the 24 Cavities in ACC 4-6

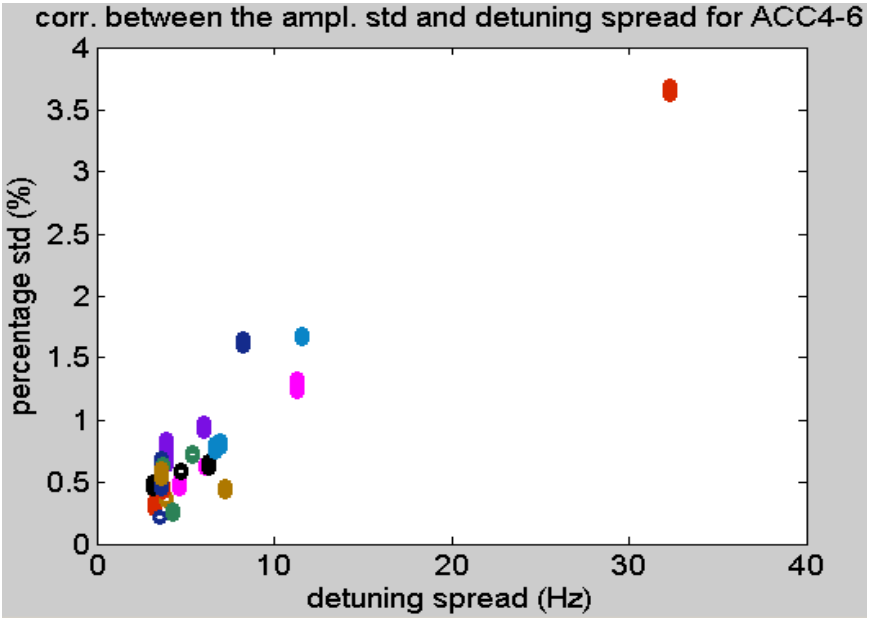

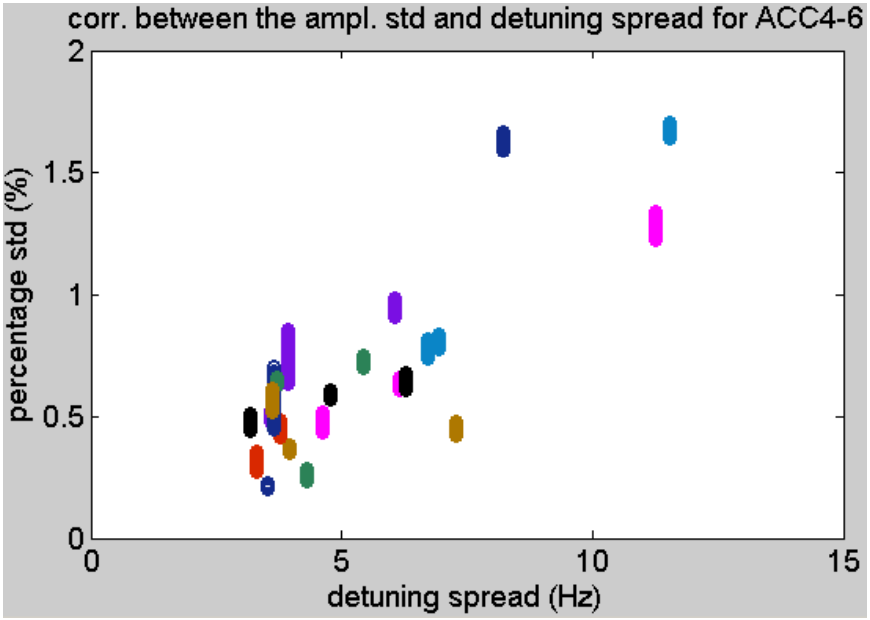

RF Control Models & Simulators

(Goal: A Common Matlab Model)

Gustavo Cancelo
Brian Chase

Models and Simulators

- Accepted model for the cavities (Tesla)
  - Dependent on dressed cavity
- Model for HLRF is dependent
  - Drive amplifier
  - Modulator type and specific
  - klystron (3 types)
  - Distribution scheme
- Model for LLRF is dependent
  - Design variations
  - Distribution scheme
- Present simulator features:
  - Cavity, klystron response, Ql,
  - Drive amp response, receive
- Goal: A common Matlab simu
  - We are fairly close

11/19/08 LCWS08

RF block diagram and equivalent LLRF Control diagram

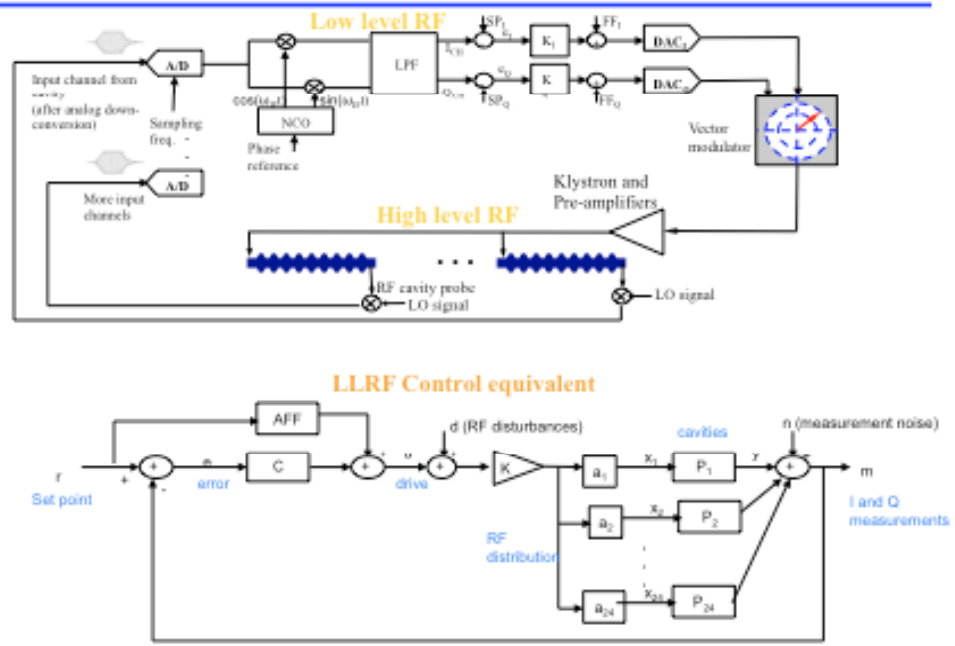

Gustavo Cancelo (presenter) for the FNAL LLRF group

RF Regulation Requirements from Physics and RF Systems Viewpoints

Nick Walker
Brian Chase

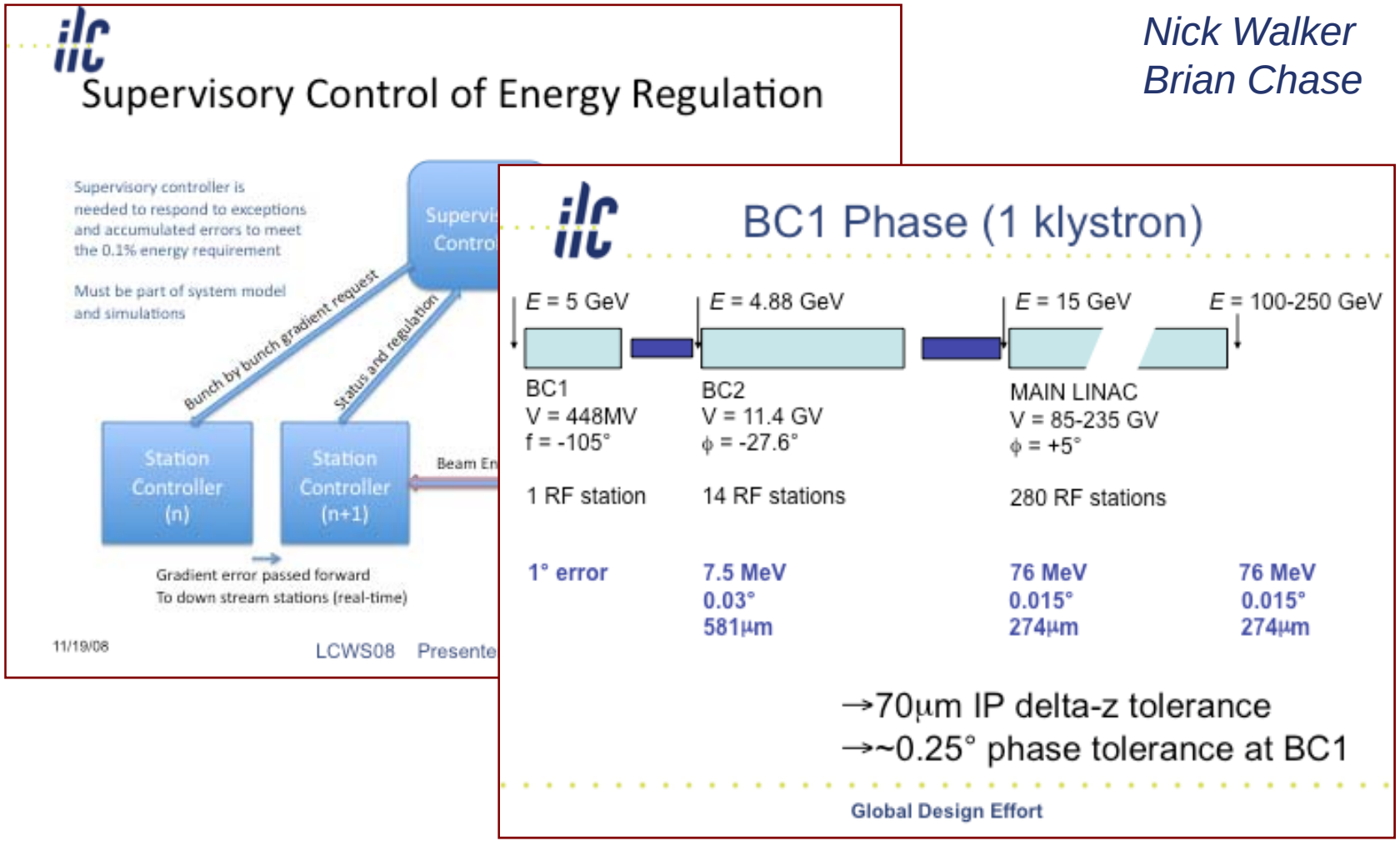

Evaluating Wide-Bandwidth ADCs for Direct Digital Down Conversion

Shin Michizono
Stefan Simrock

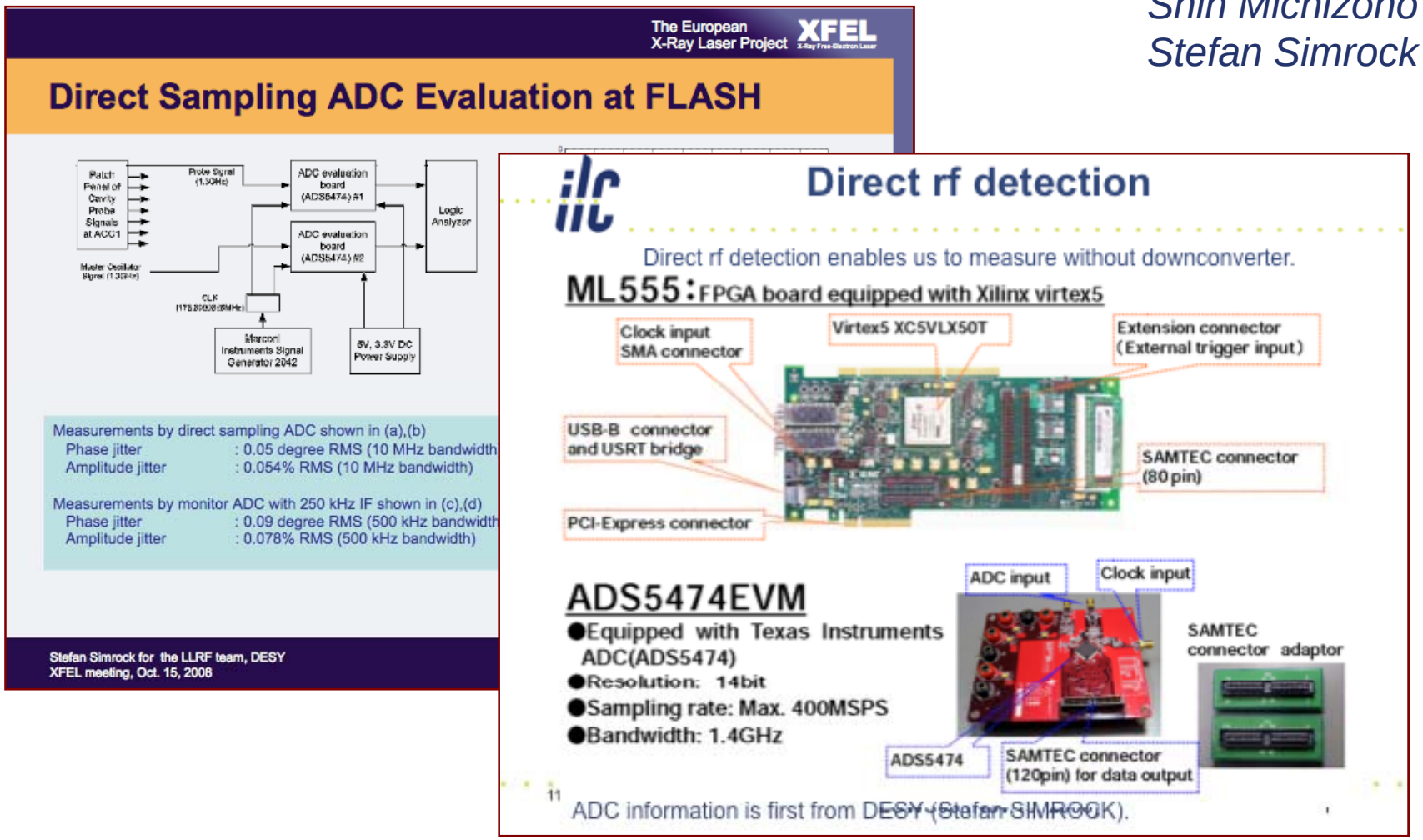

CIEMAT SC Quad Test at SLAC

Cos(2ϕ), 0.6 m Long, 0.36 T/A Quad + X/Y Correctors

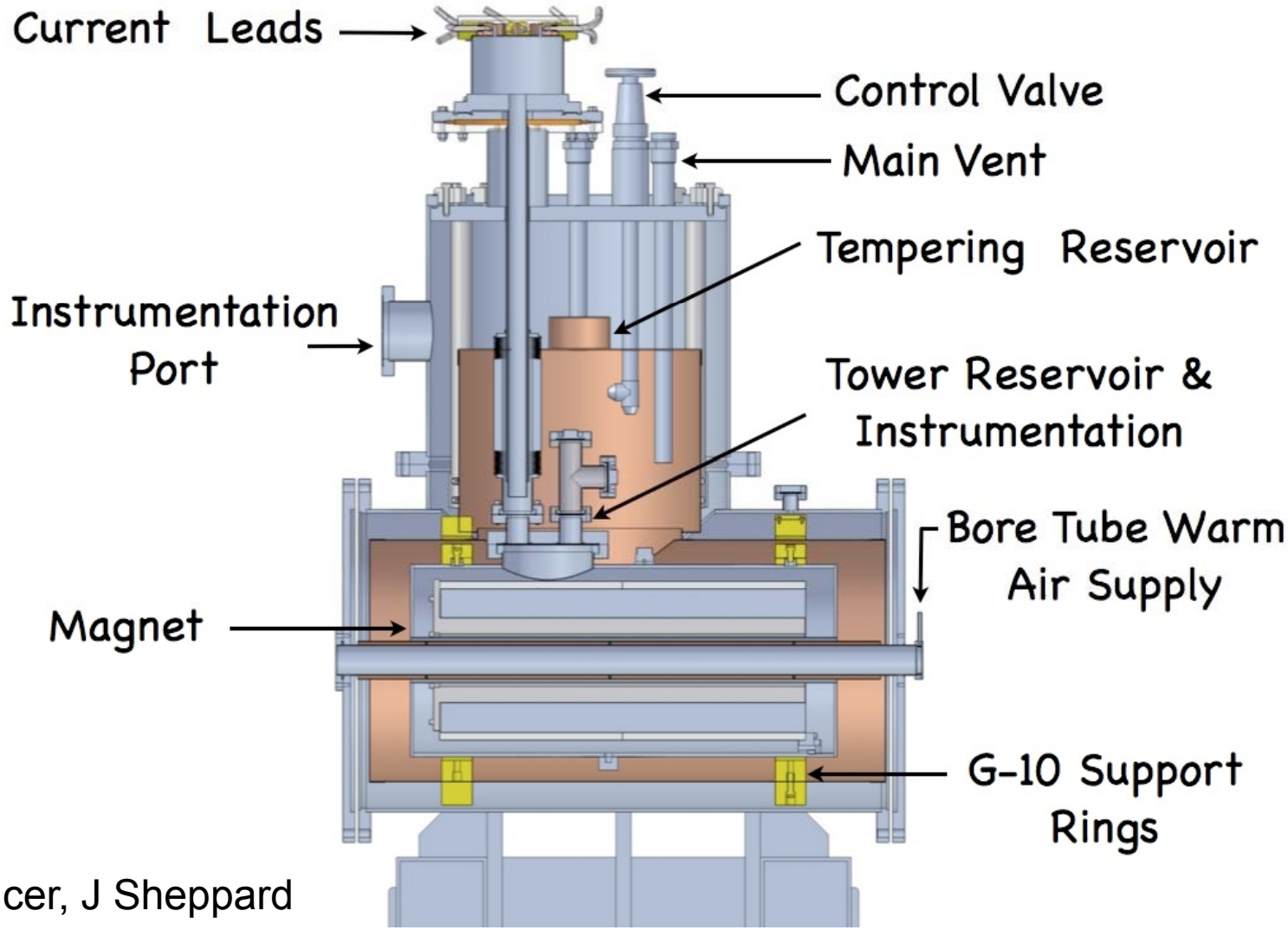

C Spencer, J Sheppard

Center Motion with 20% Field Change

Motion Shown in Plots with +/- 5 μm Horizontal by +/- 5 μm Vertical Ranges

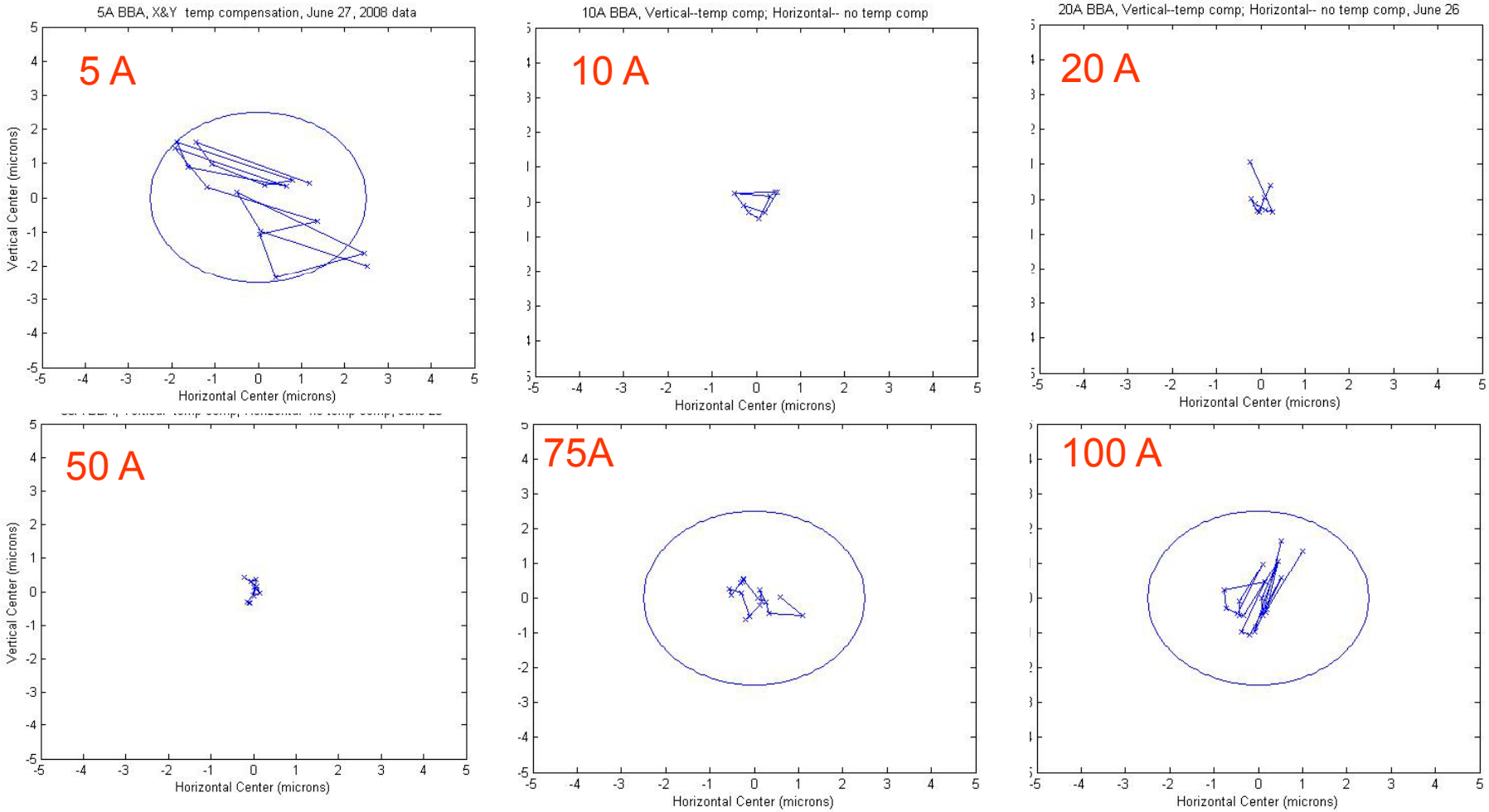

FNAL SC Quadrupole Design

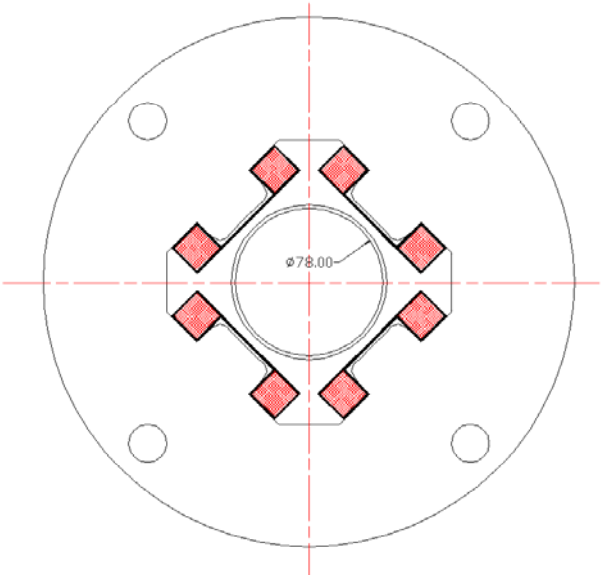

A "superferric" design was chosen where saturated iron poles form a substancial part of the magnetic field in the quadrupole aperture.

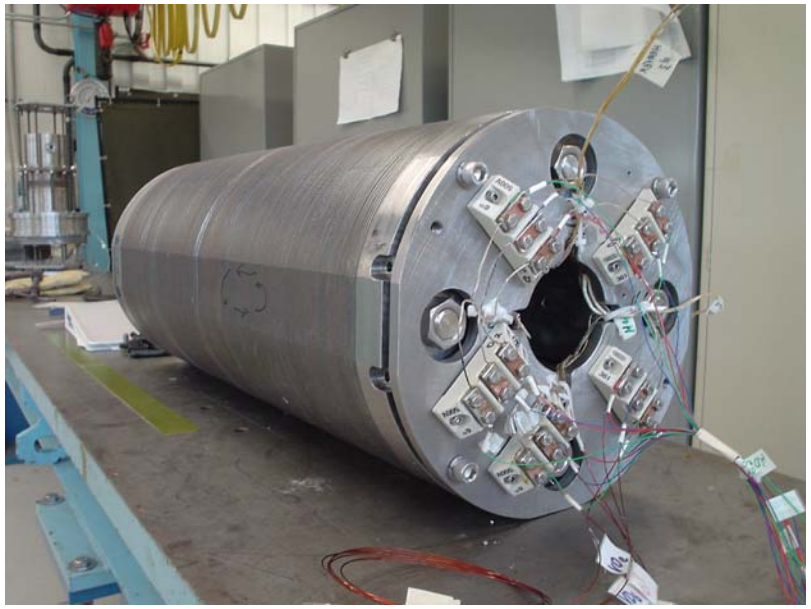

QUADRUPOLE MODEL PARAMETERS

Parameter	Unit	Value
Peak current at 36 T gradient	A	100
Magnet length	mm	680
NbTi superconductor diameter	mm	0.5
Superconductor filament size	µm	3.7
Superconductor critical current at 5 T and 4.2 K	A	200
Coil maximum field	T	3.3
Quadrupole coil number of turns/pole		700
Yoke outer diameter	mm	280

V. Kashikhin

Center Motion with Field Change

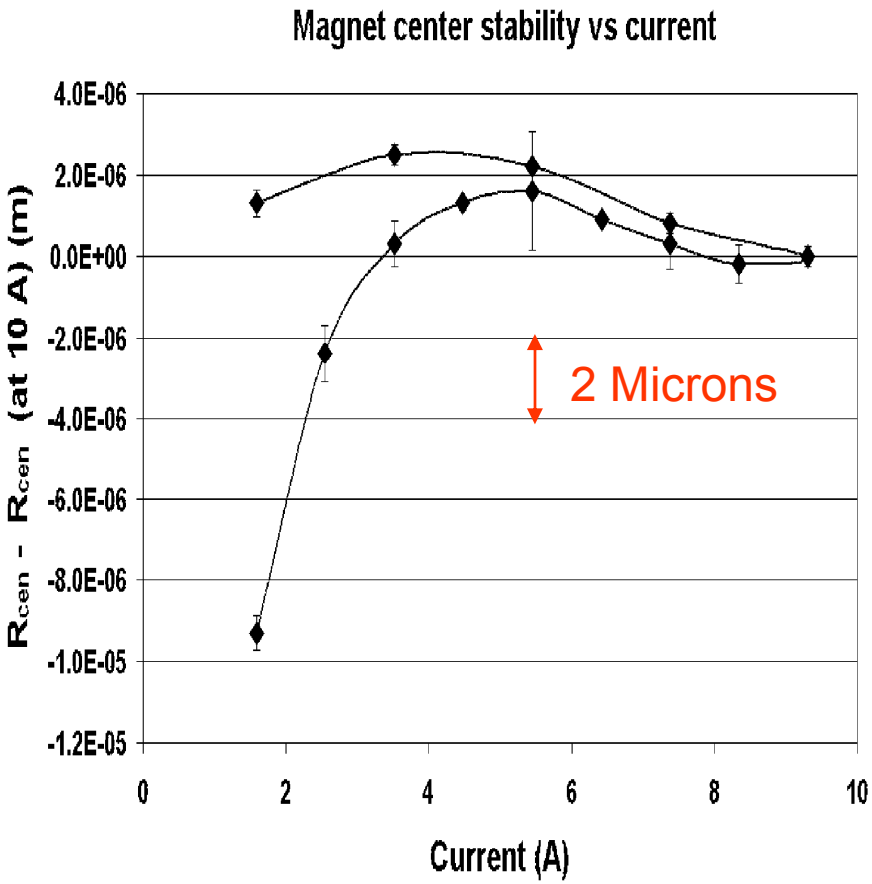

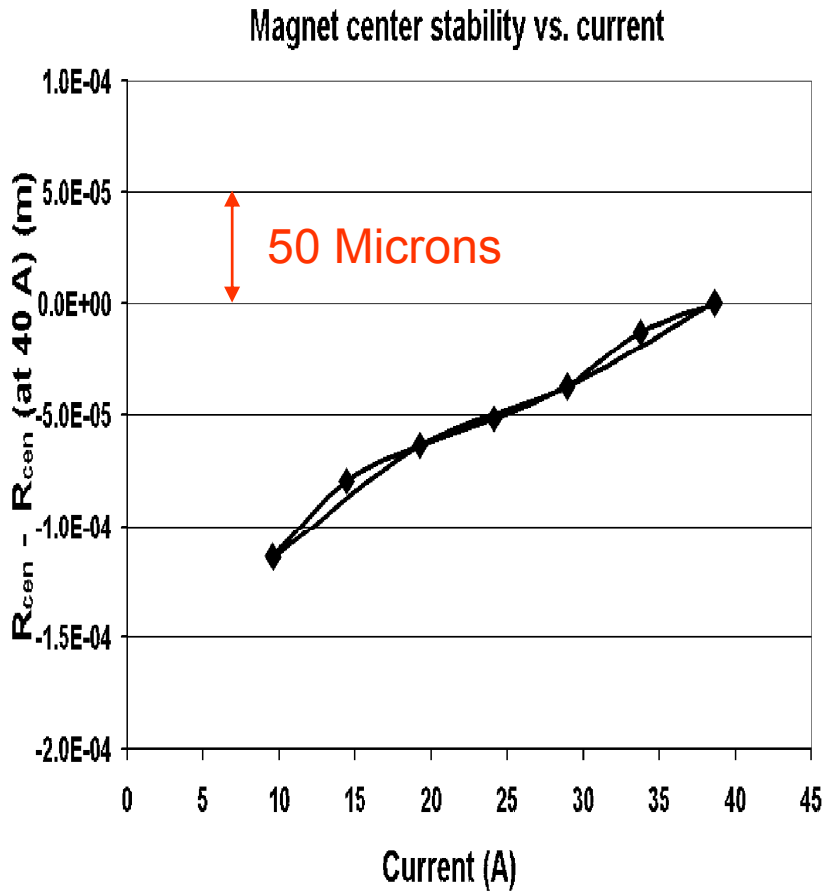

XFEL Prototype Superferric 6 T SC Quad

- Design according to TUEV pressure vessel rules
- Copperized beam tube
- Sliding supports on linear bearings
- BPM attached on endplate

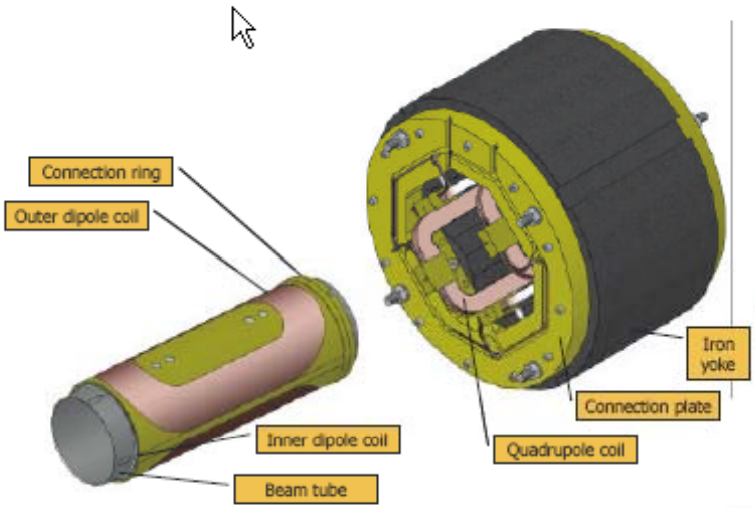

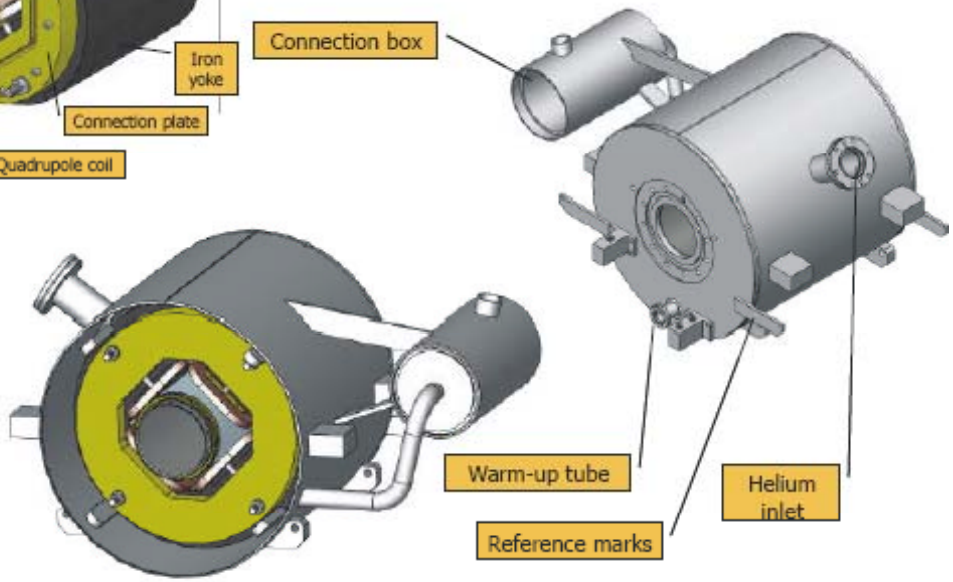

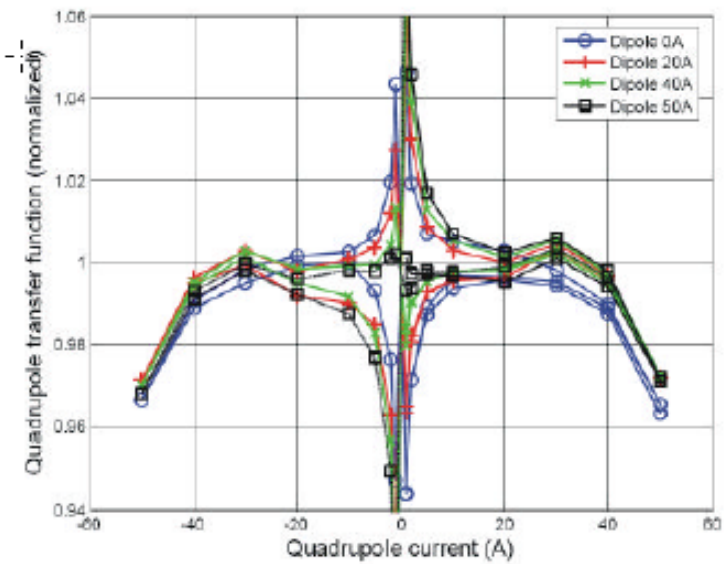

In first prototype, see significant, asymmetric magnetization plus dipole influence on quad

Fernando Toral

SLAC Half Aperture S-Band BPM

- SLAC approach:
  - S-Band design with reduced aperture (35 mm)
  - Waveguide is open towards the beam pipe for better cleaning
  - Successful beam measurements at SLAC-ESA, ~0.5 µm resolution
  - No cryogenic tests or installation
  - Reference signal from a dedicated cavity or source

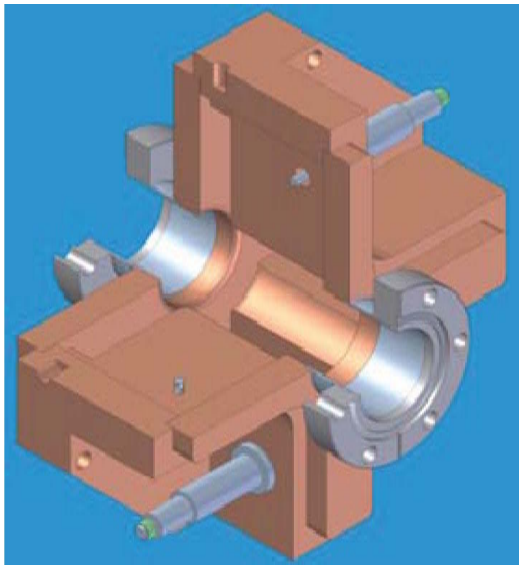

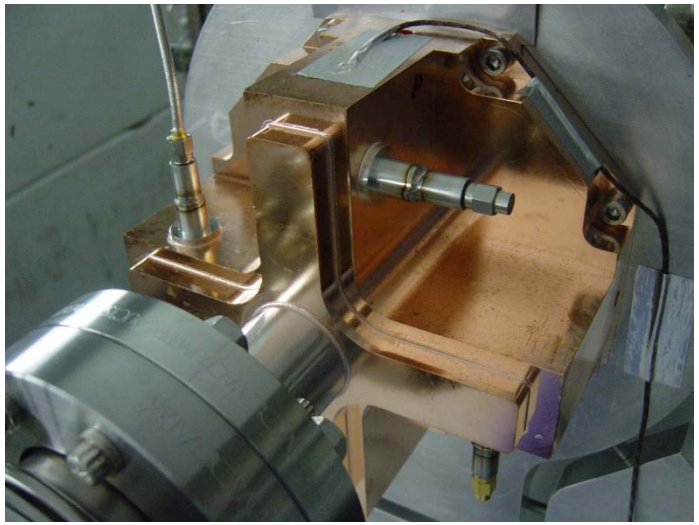

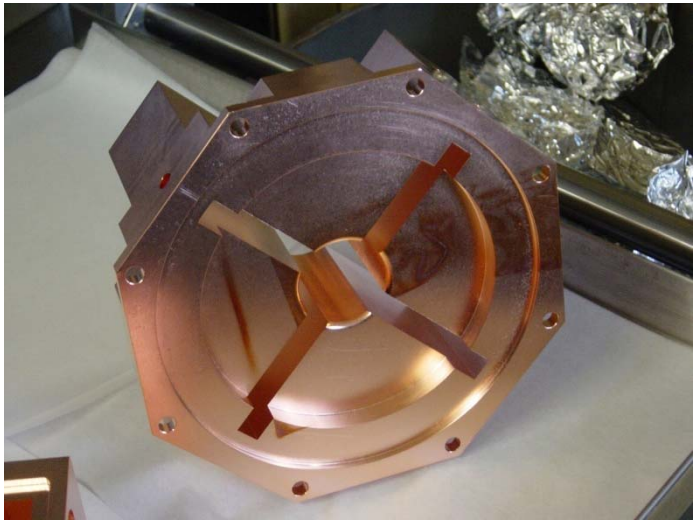

M Wendt

FNAL Full Aperture L-Band Design

Window –
Ceramic brick of alumina 96%
$\varepsilon_r = 9.4$
Size: 51x4x3 mm

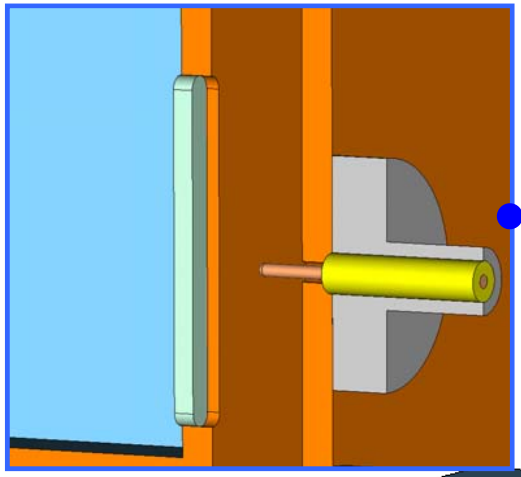

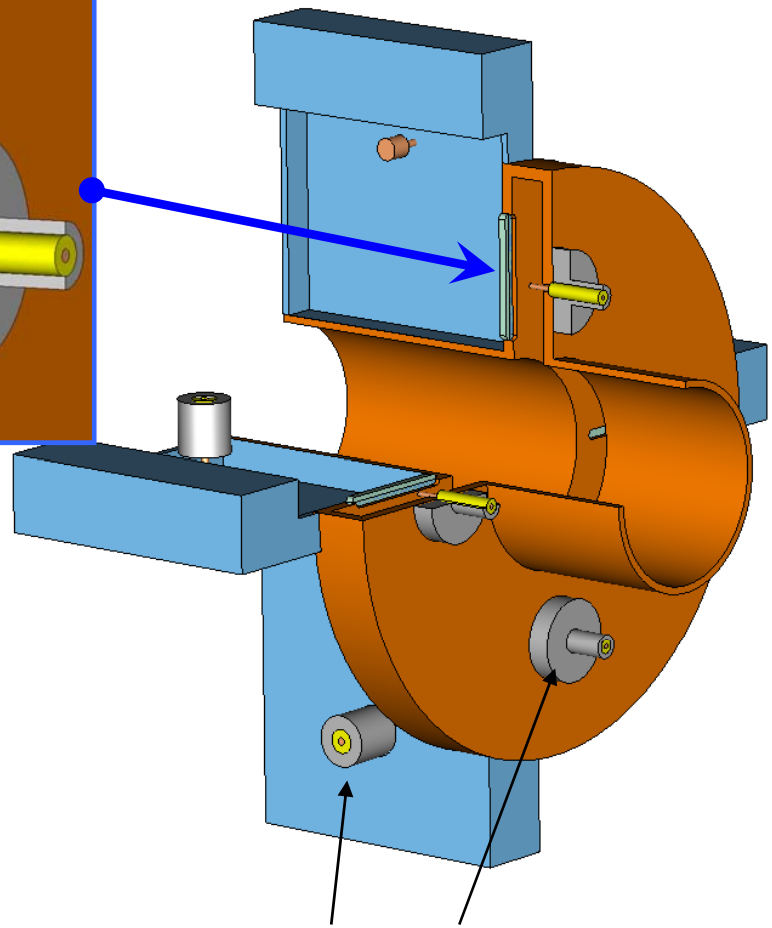

N type receptacles, 50 Ohm

Frequency, GHz, dipole monopole	1.468 1.125
Loaded Q (**both monopole and dipole**)	~ 600
Beam pipe radius, mm	39
Cell radius, mm	113
Cell gap, mm	15
Waveguide, mm	122x110x25
Coupling slot, mm	51x4x3

Reentrant Cavity BPM for XFEL

Achieved ~ 5 µm Resolution

Cryogenics tests at 4 K on feed-throughs is OK

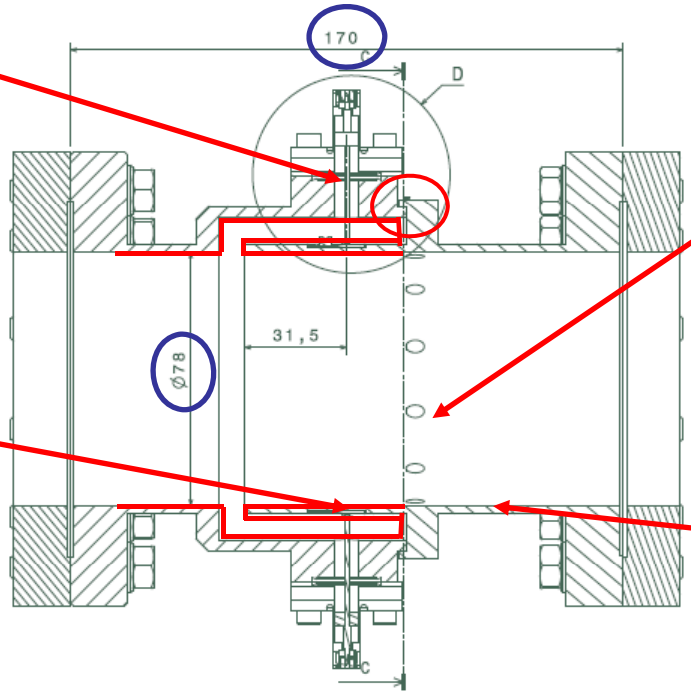

Twelve holes of 5 mm diameter drilled at the end of the re-entrant part for a more effective cleaning (Tests performed at DESY).

Cu-Be RF contacts welded in the inner cylinder of the cavity to ensure electrical conduction.

Copper coating (depth: 12 µm) to reduce losses. Heat treatment at 400°C to test: OK

Eigen modes	F (MHz)	Q_l	$(R/Q)_l$ (Ω) at 5 mm	$(R/Q)_l$ (Ω) at 10 mm
	Measured	Measured	Calculated	Calculated
Monopole mode	1255	23.8	12.9	12.9
Dipole mode	1724	59	0.27	1.15

TM12, Full Aperture, 2.0 GHz BPM

Sun Young Ryu, Jung Keun Ahn (Pusan National University)
and Hitoshi Hayano (KEK-ATF)

Achieved ~ 0.5 μm Resolution

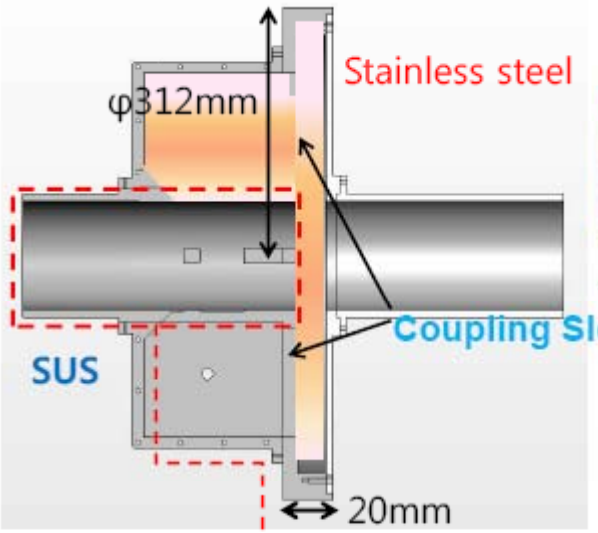

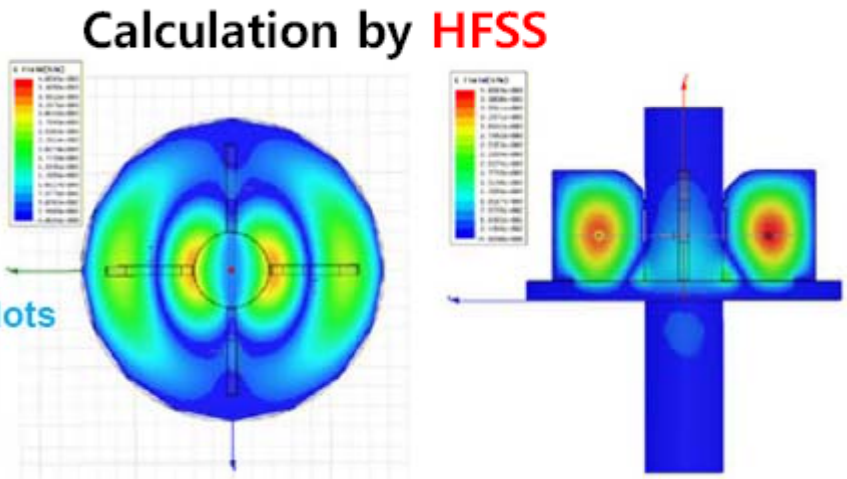

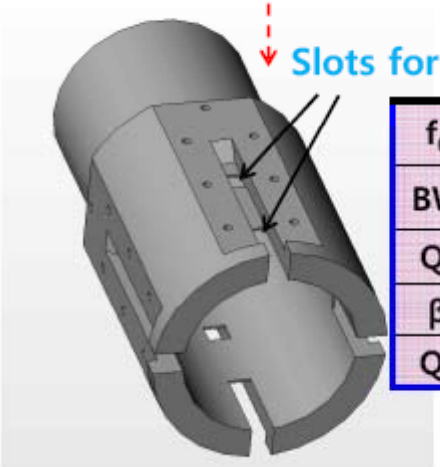

f_0	2.03GHz
BW	8MHz
Q_L	254.5
β	4.2
Q_0	1323.4

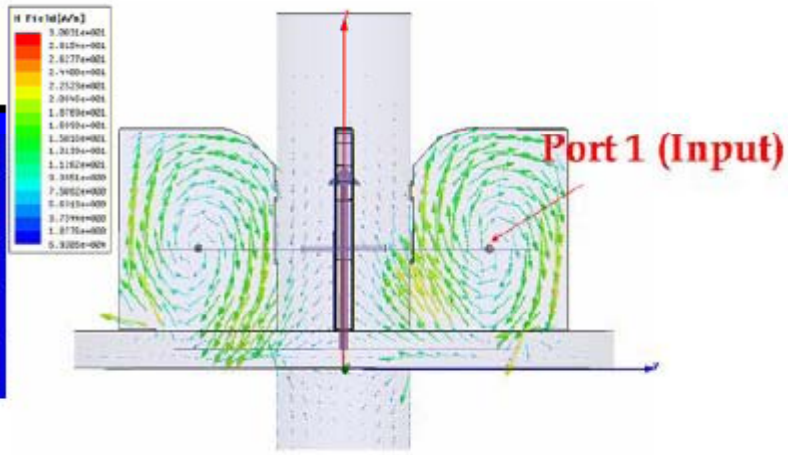

Summary

- Solid Progress on all Fronts
  - New Modulator and RF Distribution Systems designs being tested
  - Good progress in 9 mA FLASH program and better understanding of cavity perturbations
  - Quad and BPM that meet ILC requirements
- LLRF Planning
  - List of measurements for next run
  - Ideas on how to characterize pulse-to-pulse variation in cavity gradient profiles
  - Plan on how to evaluate Klystron Cluster scheme in terms of LLRF control