Status AHCAL EUDET Prototype

Mathias Reinecke

for the AHCAL developers

Under Development @ DESY

FE

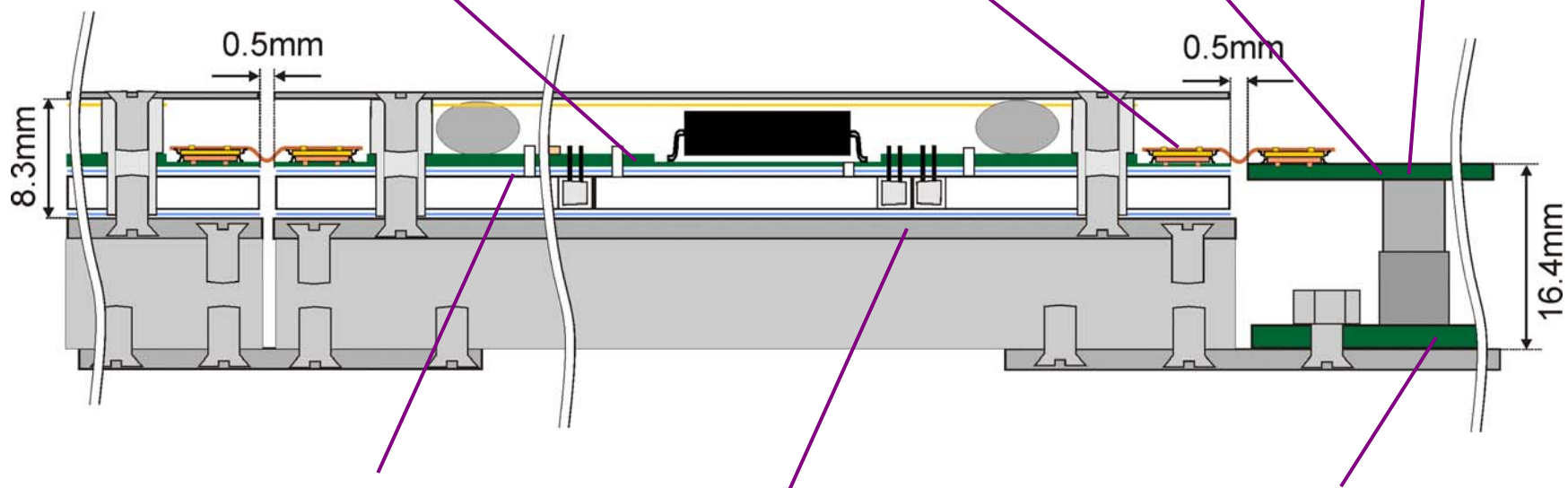

HBU Interconnect

FE

Flexleads arrived @DESY

Mid-part very stiff => pre-bending HBUs in cassette „shiftable“ by a few 100µm

Connectors expected: 19.12.08

Assembly: end December 08

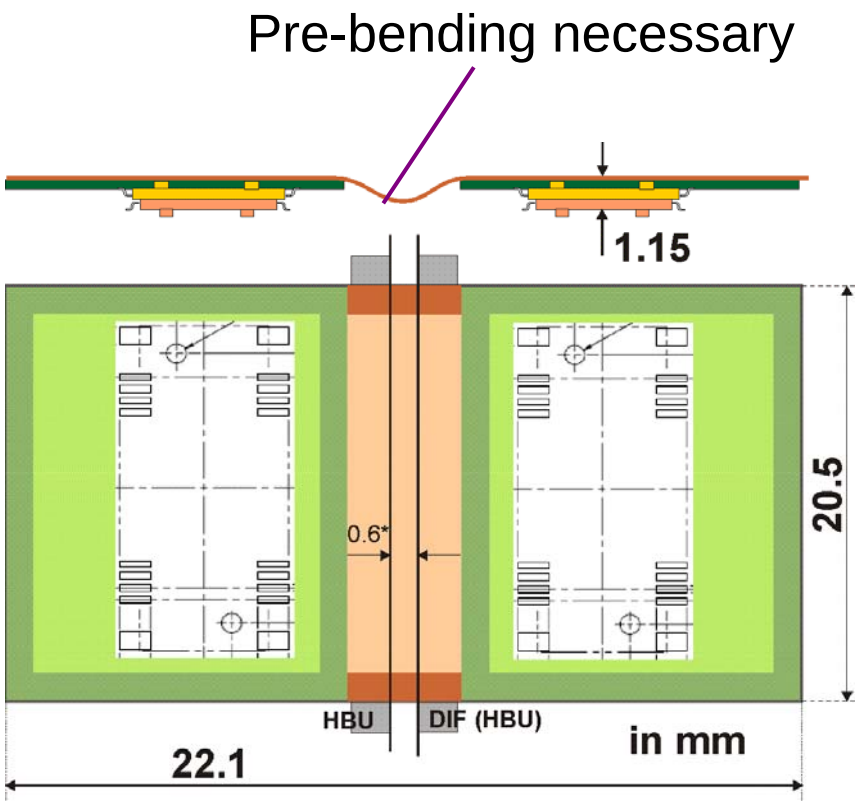

Prototype Cassette & Setup

FE

Drawings: A. Schröder

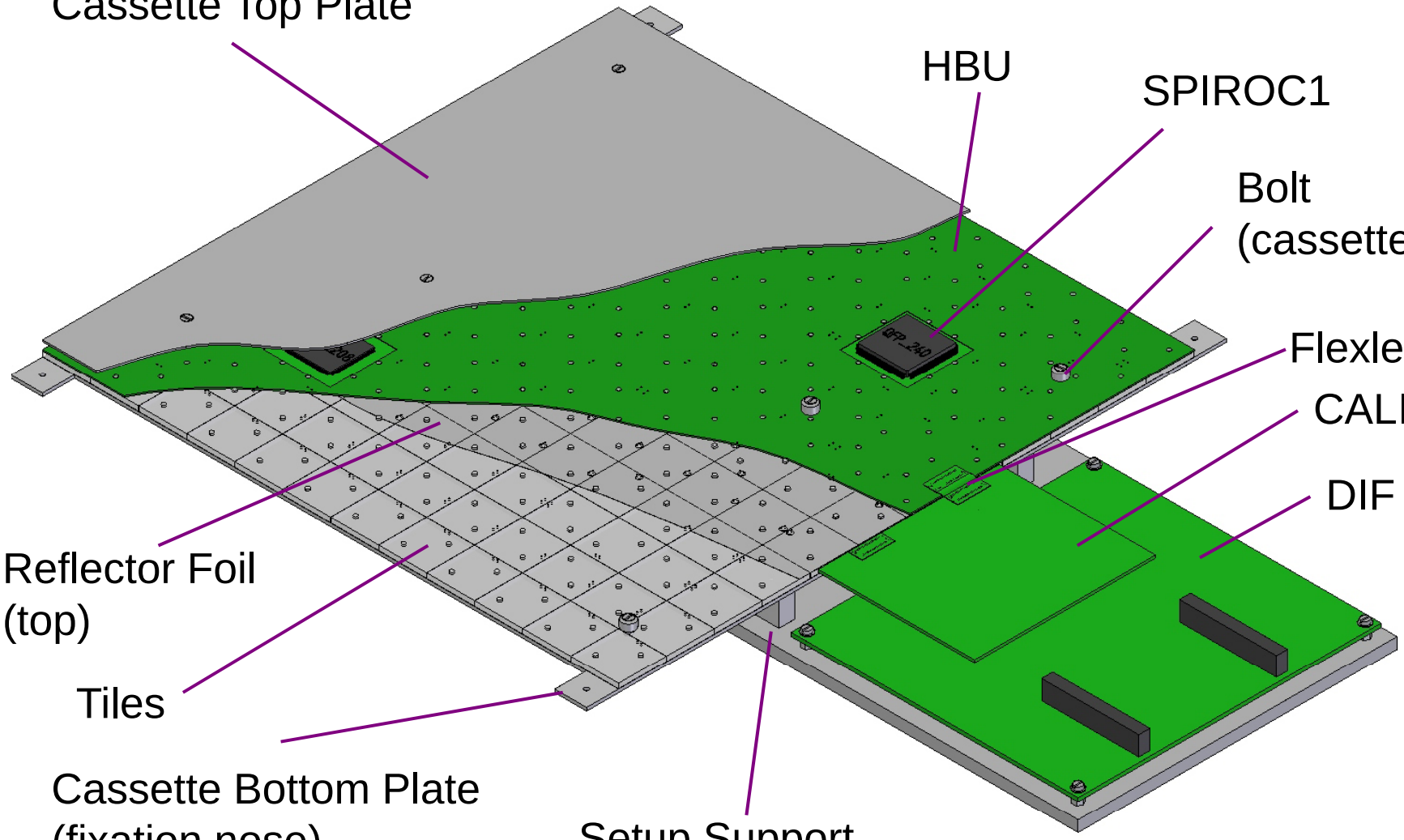

Prototype Cassette & Setup

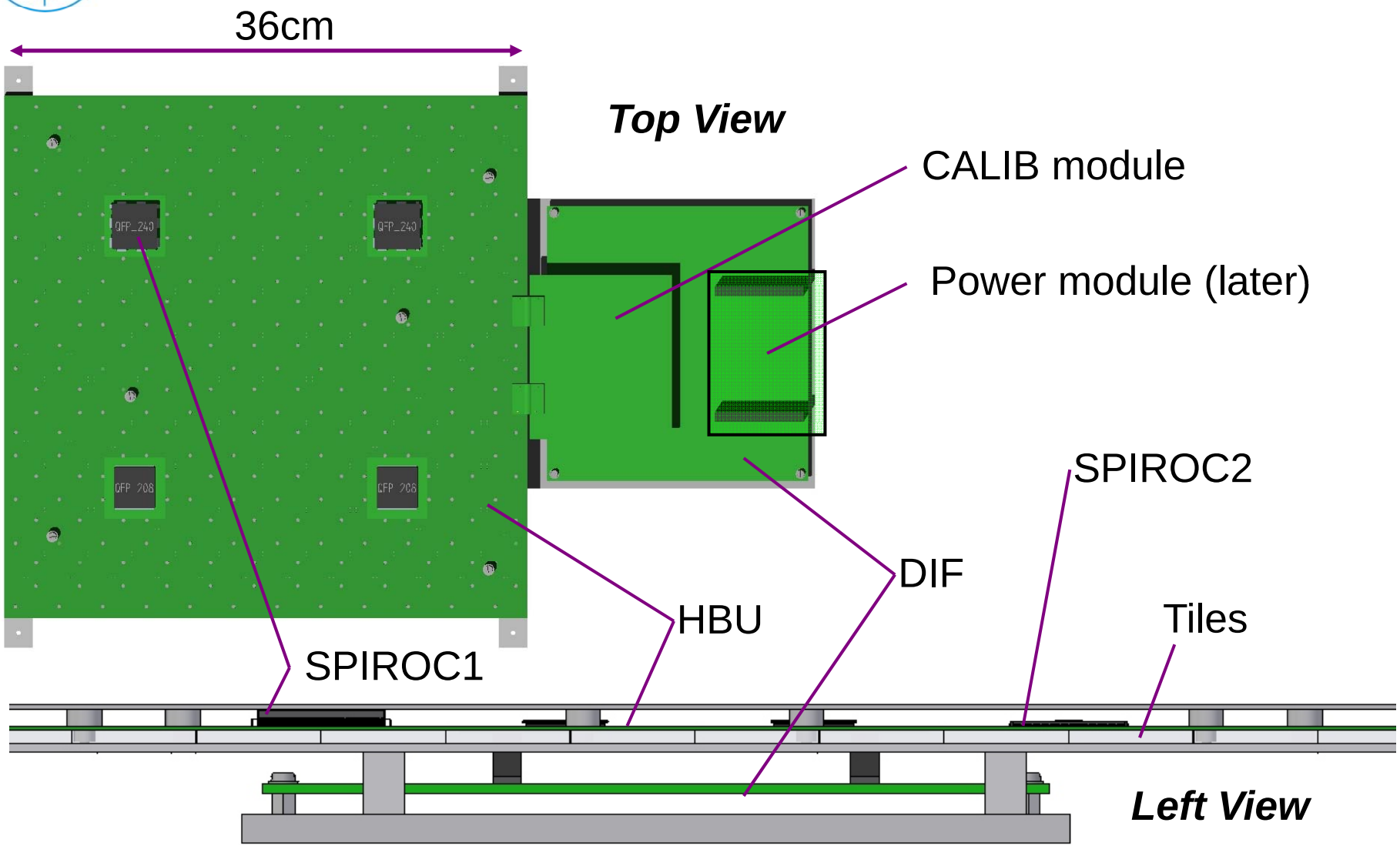

Prototype Cassette & Setup

FE

Now „in scale“!!

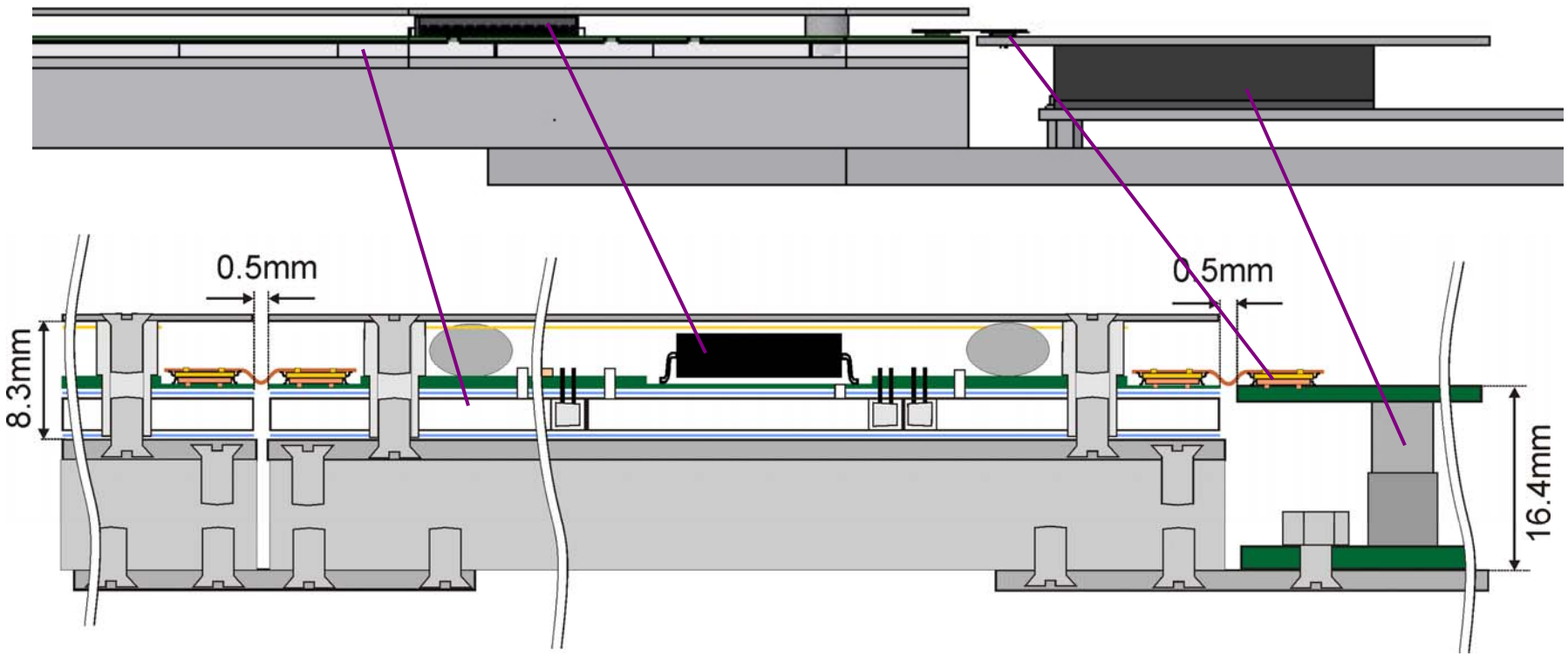

Design Data: SolidEdge ⇔ MentorGraphics (concept verification)

Mechanical parts avaliable: End Jan. 09

Reflector Foils

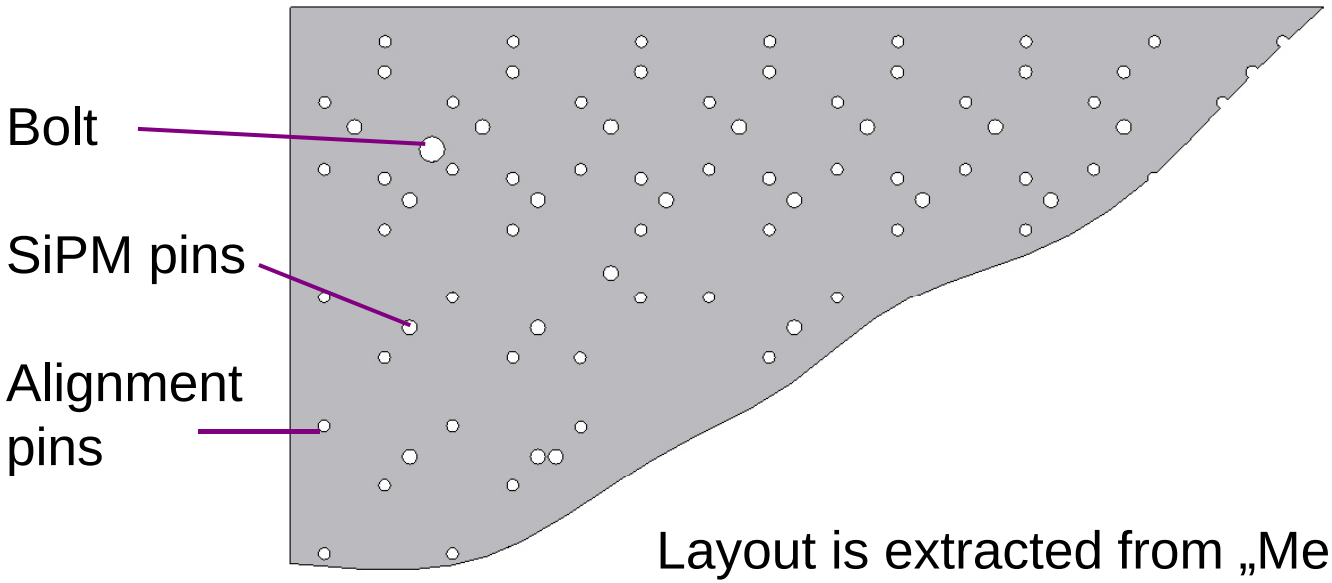

Layout is extracted from „Mechanics Design“

Reflector foil has been ordered ?!
(remains from physics prototype still available)

CNC-drilling has to be tested (Dec. 08)

Reflector Foils available: End Jan. 09

POWER module

FE

System can be operated without POWER module
(bench-top power supplies) => production shifted to 2009

Schematic will be finished in Nov. 2008

Layout: Jan. 09, „module quite similar to CALIB module“

Module expected: End March 2009

CALIB module

FE

Module in production.

Tests in stand-alone mode possible (no DIF and/or HBU needed).

µC programming in progress.

Module expected: December 2008

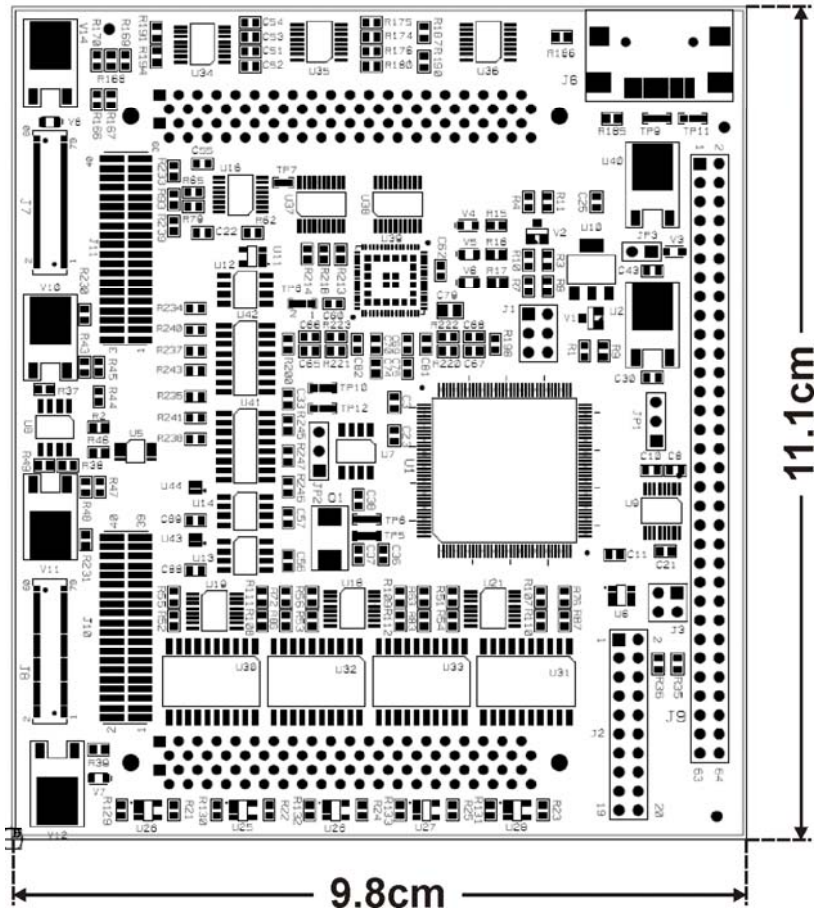

HBU0 module

FE

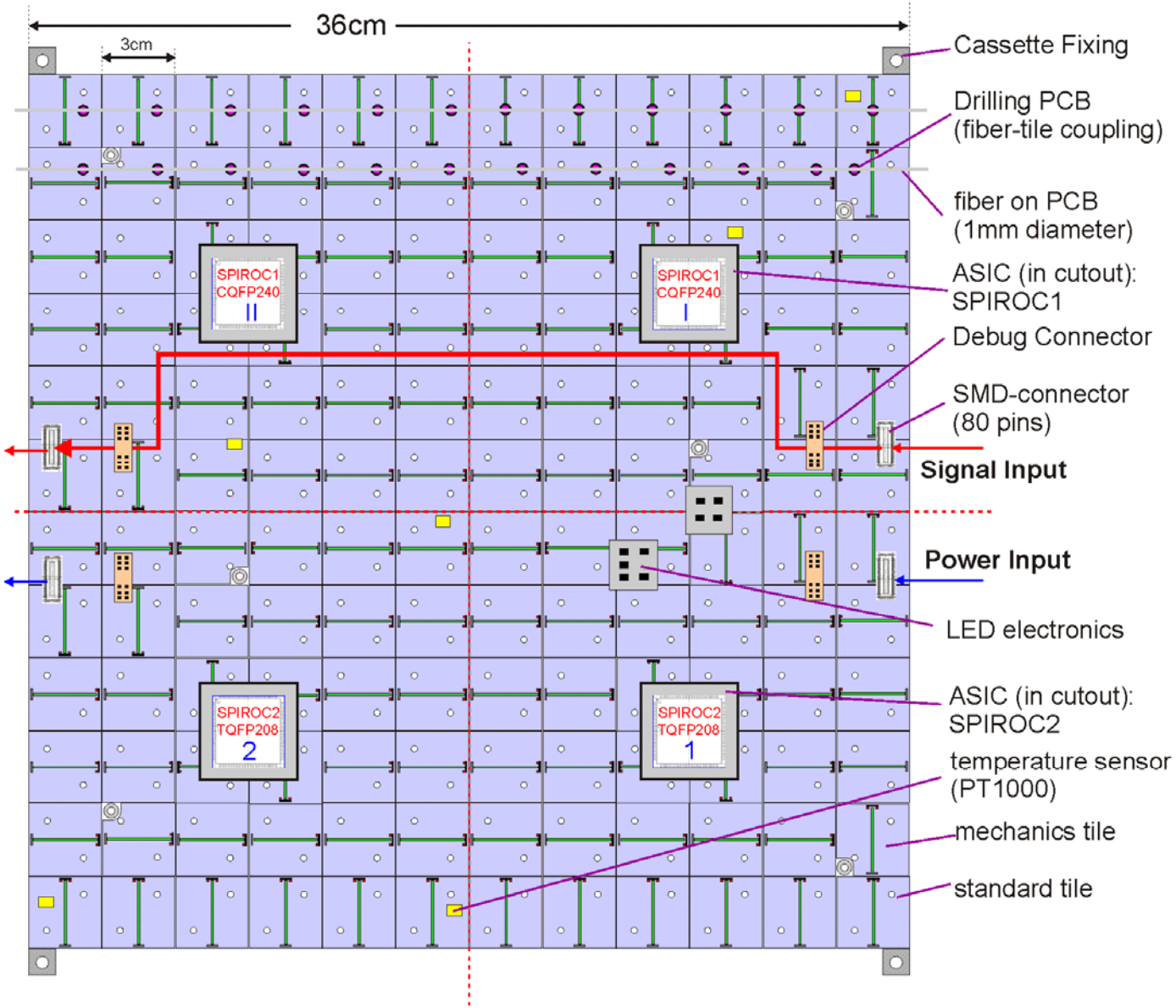

HBU0 module

FE

-Complex layout:
36 x 36 cm², ASICs in cutout, ASICs (240 and 208 pins) with high number of bias voltages, design for 2.20m slabs.

End 2008: HBU0 layout expected to be finished. Assembly: DESY!!

Tiles and ASICs needed: end of Jan. 09

HBU0 expected fully assembled: Mid March 2009

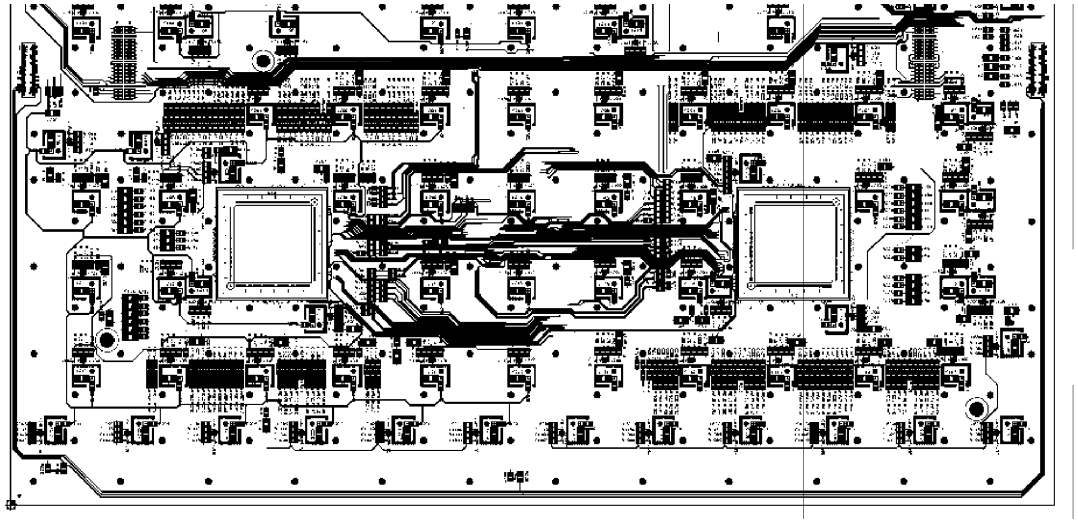

DIF Firmware

FE

DIF command interface under discussion (see DIF talk tomorrow)
<u>Preliminary version finished!</u>

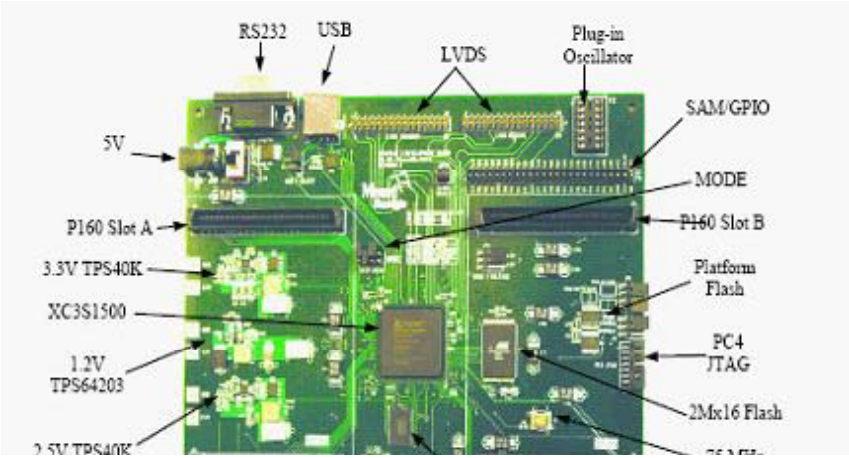

Priority 1: DIF
Step 2: DIF-C

First version f
Labview, bas
Mid Feb. 09

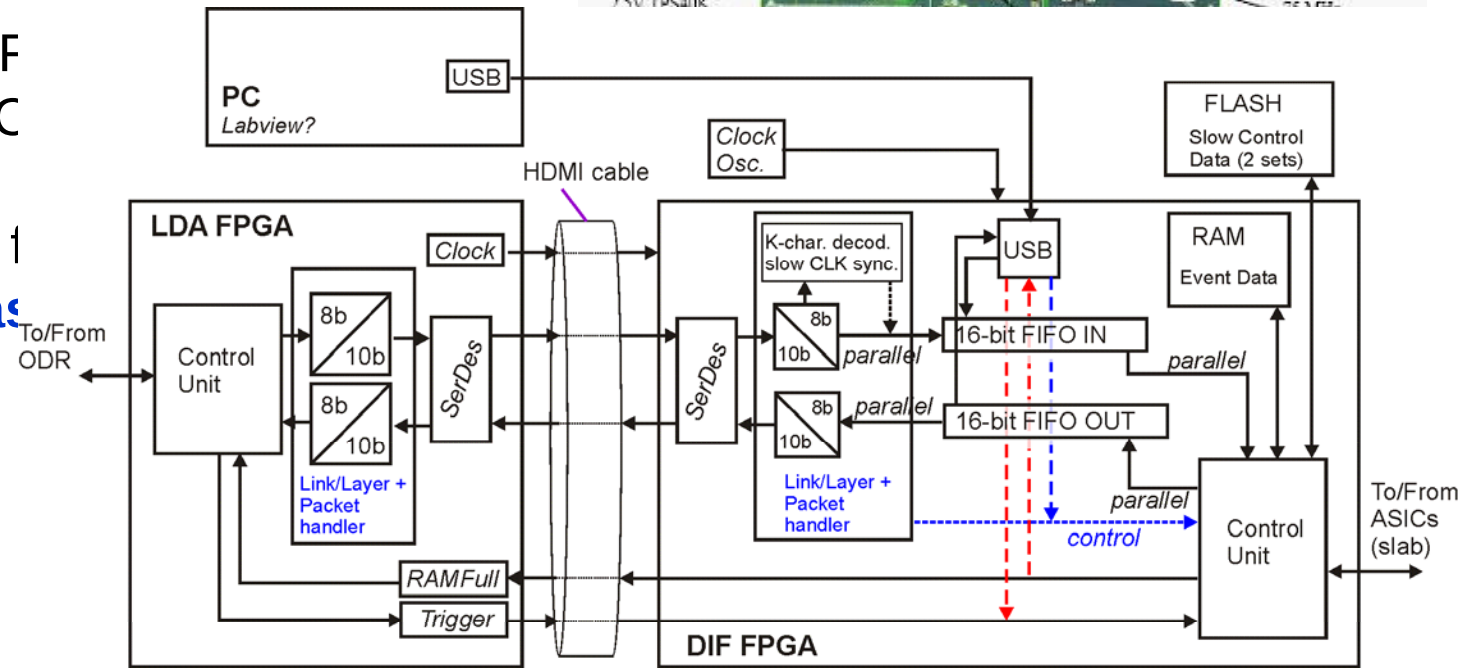

Timeline

FE

FE AHCAL Timeline	2008						2009				
Month / Task	June	July/Aug	Sept	Oct	Nov old milest.	Dec	Jan	Feb	Mar/Apr	May/June	July/Aug
Scint. Tiles											
Definition of architecture									Dimensions	Production	
Production											
SPIROC	SPIROC2						Tested, TQFP		Submission	Series Prod.	
Hcal Base Unit (HBU)											
Circuit Design/Layout		schematic		Comp.-Def	layout						
PCB Production/Assembly							Production	Assembly	Test		
Detector Interface (DIF)											
Common Block Firmware											
AHCAL Block Firmware											
Circuit Design/Layout											
PCB Production/Assembly											
CALIB, POWER											
Circuit Design/Layout			Calib			Power Schem	Power Layou	CALIB+POWER			
PCB Production/Assembly					CALIB Prod			Power Prod.			
System Tests											
DAQ Software, LDA											
Prototype											
EUDET Mod. (Final)	10.12.2008										

Quite optimistic for EUDET module …

Conclusions

FE

- Mechanical integration gives a good system‘s overview (good approach).

- Both Light Calibration Systems (LCS) concepts can be tested with HBU0.

- DIF firmware is still in the beginning. See status report tomorrow.

- HBU0 is the critical component for the timeline. SPIROC ASICs and tiles needed end of Jan. 2009.

- Timeline is critical for EUDET layer module (does not include failures in module‘s operation => redesigns).

- First system, based on USB control, expected mid March 2009