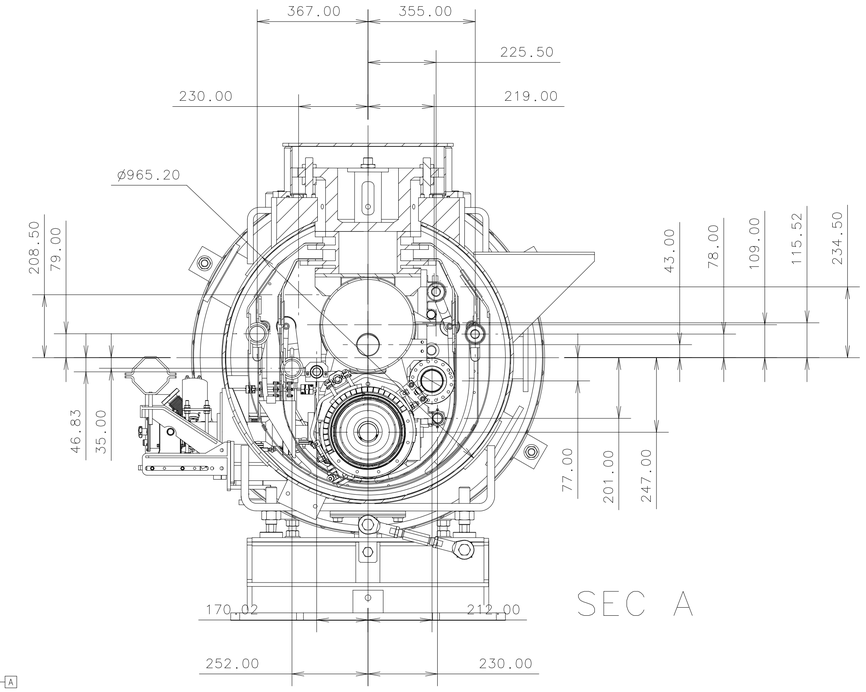

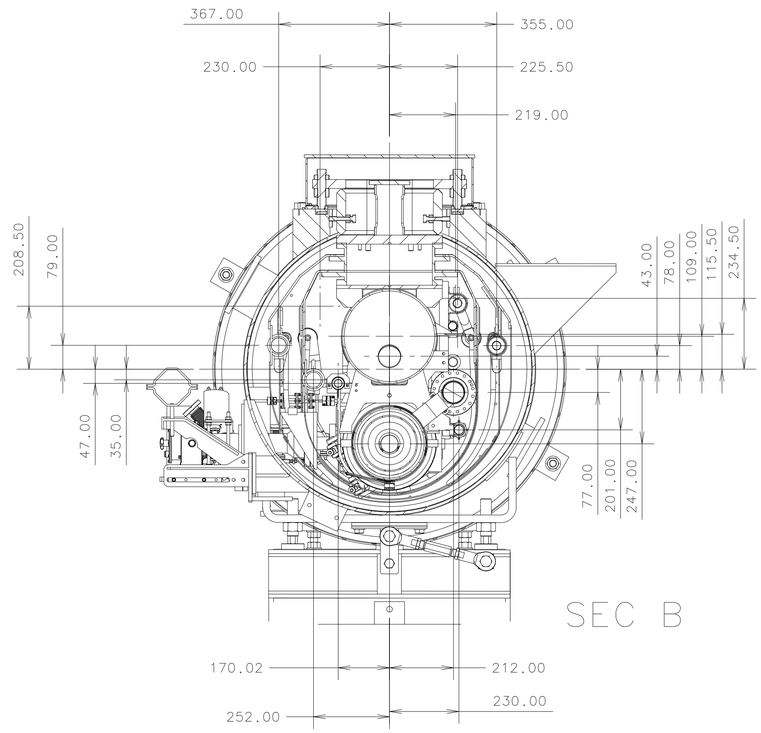

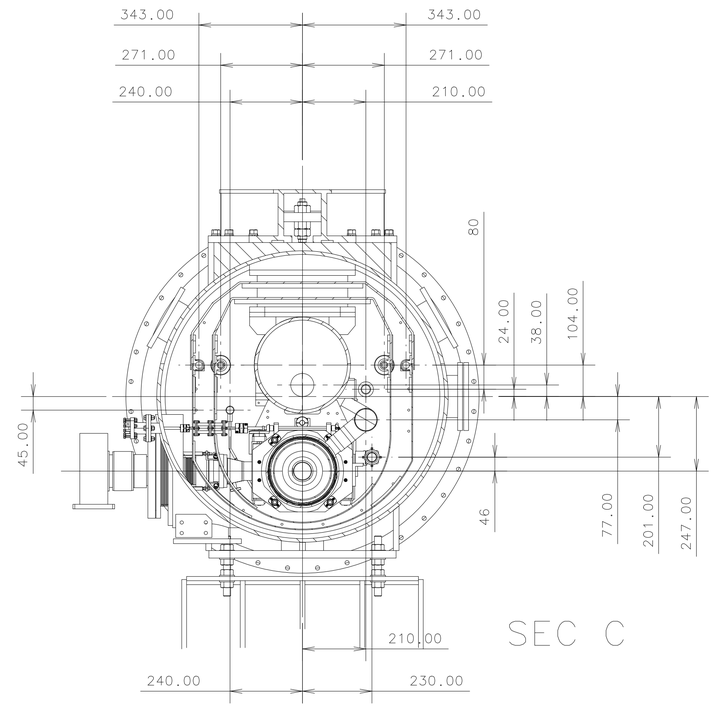

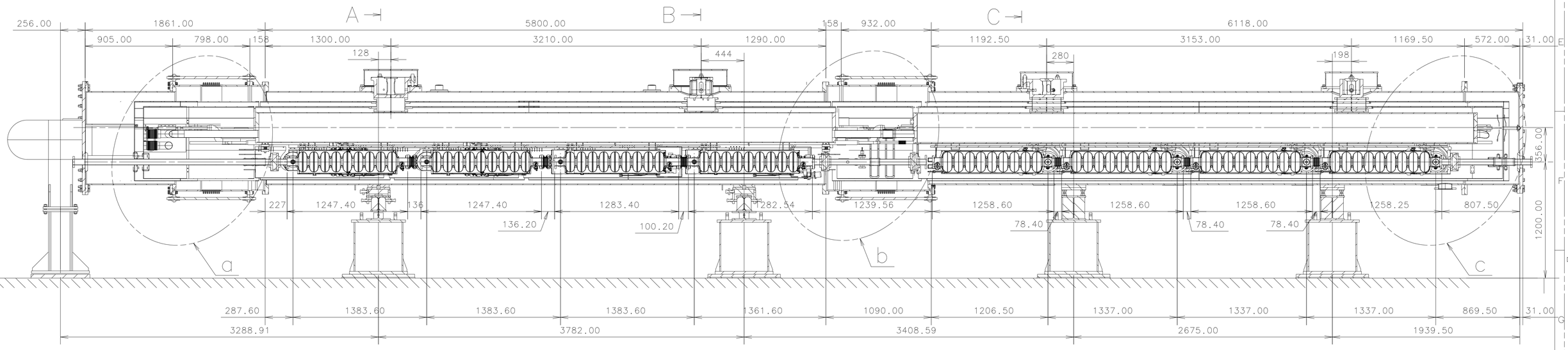

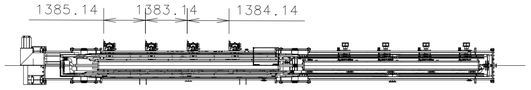

S1_Assembly_1_aoki1
Date : 090310 Rev.2

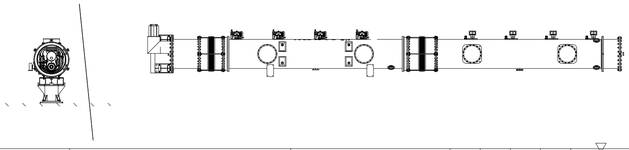

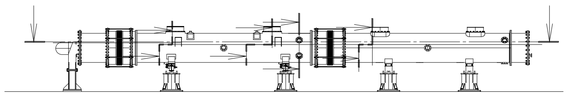

IND. (REVISION)	Zone	Date	NAME	Approved	Modification

PC.#	PART NAME		MATERIAL	QTY	REMARKS COLUMN
001					
ACKNOWLEDGER	DESIGNER	DRAFTER	CREATION DATE	SCALE	PART NAME
	ouchi higashi(nori)	aoki (sanritu)	2005 12/12	1:1.5	
KEK High Energy Accelerator Research Organization.			DRW.#		Rev. A