DRFS

S. Fukuda and DRFS project team
KEK

Contents

1. Revised DRFS Scheme
2. Klystron, Modulator and PDS Design
3. Important components of DRFS
4. Low Power Scheme of DRFS
5. Cost Impact for LowP DRFS
6. Cooling
7. Interlock
8. Appendices: Operability and Availability
9. Summary

Revised DRFS Scheme

- DRFS was proposed in LCWS08 in Chicago as an alternative R&D plan mated to single tunnel configuration.
- Basic DRFS has 750kW MA klystron which feeds power to two cavities. Voltage pulse of each klystron is applied by a MA modulator. 13 klystrons are connected to a common DC power supply.
- Cost estimation, specification and layout are investigated and reported in TILC08 and DESY AT&I meeting.
- Recently DRFS scheme was re-evaluated thru the discussion for the high availability meeting in the KEK DRFS project team. This scheme and LowP option based on this scheme are presented in this slide.

DRFS with a High Availability

- DRFS with a High Availability was presented in the High Availability Task Force Webex Meeting (Jul.8.09)

DRFS Scheme

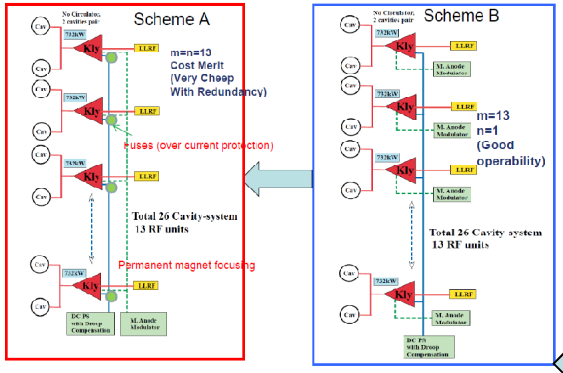

Back-up MA Modulator for Higher Availability
PM Focusing, No IP,
Common Heater PS
DC PS back-up is also possible

Scheme A

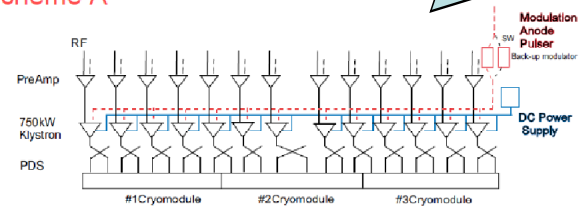

Cavity	26	
DC	26	
Magic T	13	
750kW Kly.	13	
PM Focusing	13	
Coil PS	0	PM focusing
Heater PS	2	common
Preamp	13	
MA Pulser	2	one is backup
LLRF&Intlk	13	
DC P/S	1(or2)	

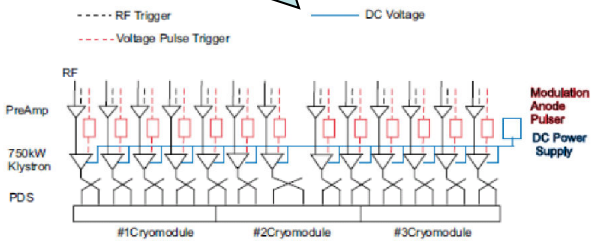

Cavity	26
DC	26
Magic T	13
750kW Kly.	13
Coil	13
Coil PS	13
Heater PS	13
Preamp	13
MA Pulser	13
LLRF&Intlk	13
DC P/S	1

Comparison between scheme A and B

- Proposal made before based on the scheme B has a good operability. Control of both voltage pulse and rf pulse are performed, while it required 13 MA modulators, which result in higher cost, poor availability and many repairing works for modulators.
- If applied voltage pulses for MA klystrons are same, a common MA modulator for 13 klystrons are possible. Operability is not scarified as long as keeping use of 13 klystrons.

  Scheme A has many advantages for cost saving, higher availability and reducing the repairing works.
- Attempt for further cost saving are considered.

Klystron Design for DRFS

Design Parameters

- **Frequency** **1300MHz**
- **Output Power** **750kW**
- **RF pulse width** **1.565ms**
- **Beam pulse width** **1.7ms**
- **Average RF power** **6kW**
- **Peak beam voltage** **66-70kV**
- **Peak beam current** **18.5-20A**
- **Beam Perveance** **1.0-1.2μP(@66-70kV)**
- **Gun Perveance** **1.28-1.53μP (@Ea-k=56-60kV)**
- **DC Gun Voltage(A-B)** **>66kV**
- **Triode MA-type**
- **Electromagnetic Focusing (proto-type)**
  ⇨ **Permanent focusing**
- **Water cooling** ⇨ **Only collector**
- **Total length** **1.1m**
- **Weight** **70kg**

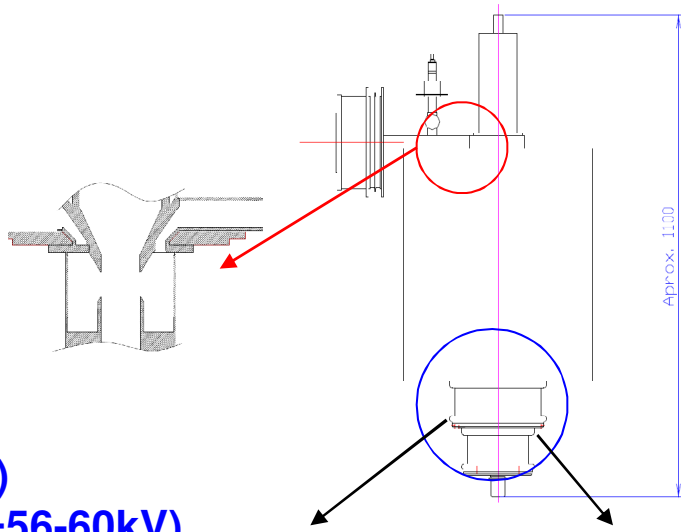

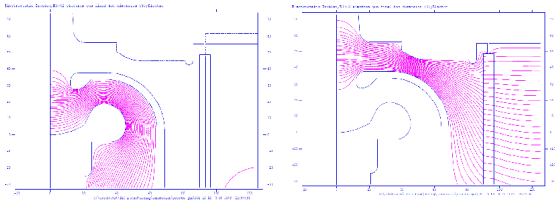

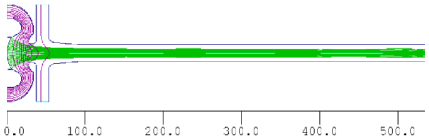

Cost Consideration for the MAK

In order to manufacture cheaply, cost cut-down efforts as follows are required.

- 9000 tubes are manufactured during the 5 years (1,800/year) and 400/year manufacturing is follows as the maintenance.
- Company proceeds up to the tube baking. (Company needs to invest the baking and brazing furnaces)
- Tube processing is performed at the ILC site utilizing the ILC modulator.
- Common parts of the tube : employing hydro-forming
- Cavity tuning: auto tuning introducing the tuning machine
- No ion pump: getter in the tube
- No lead shield in the tunnel of the ILC
- Gun insulation ceramic is operated in the air. Corrugated ceramic to make a longer insulation length is considered.
- Focusing magnet is relatively high cost, and we need to introduce permanent focusing. KEK has an experience to employ permanent focusing in S-band klystron. Elimination of PS leads to high availability.
- (R&D) Cooling Cost Saving by Utilizing Potential Depressed Collector or equivalent new idea to apply to 2nd tube.
- **RF Source cost =65k$ @1 RF unit cf. 23k$ (RF source target price)**

Aggressive Cost Study of Modulator of Scheme A

- Case of m=1, n=1 (**Scheme A**)
  DC Power supply comprises of VCB, delta-star, step-up transformer, rectifier diodes, capacitors and crowbar circuit. There is a backup one.

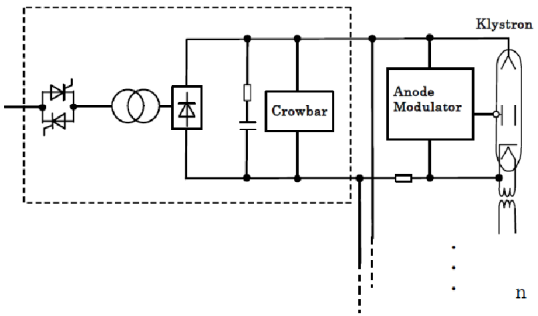

- Common one modulating anode modulator supply the voltage pulse. In order to have a high reliability, there is another back-up stand-by modulator and switched in at the modulator's failure.
- Common filament power supply with back-up PS and NO focusing magnet P/S and an IP P/S.
- M anode pulser employs oil tank and insulation ceramic output connects to klystron.
- Another issue is to eliminate IP power supply by employing the getter in the tube.
- Eliminate the disconnection SW, which is related with the system redundancies. R&D of 66kV fuse-like disconnector might help the system reliability.
- Very simple control system such as a PLC in one DC P/S with EPICS control (ex).
- **Modulator cost =18.7k$ @1 RF unit cf. 40k$ (RF source target price)**

Power Distribution System

Very simple power distribution system is proposed in this scheme.

- No circulator
- Power divider employs magic tee with high isolation for space saving.
- One Phase-shifter with symmetric PDS between couplers or asymmetric PDS with a phase-fixed waveguide for cost saving

- 750kW RF is propagated in the dry air without any extra ceramic window

- **PDS cost =7k$ @1 RF unit cf. 26.5k$ (RF source target price)**

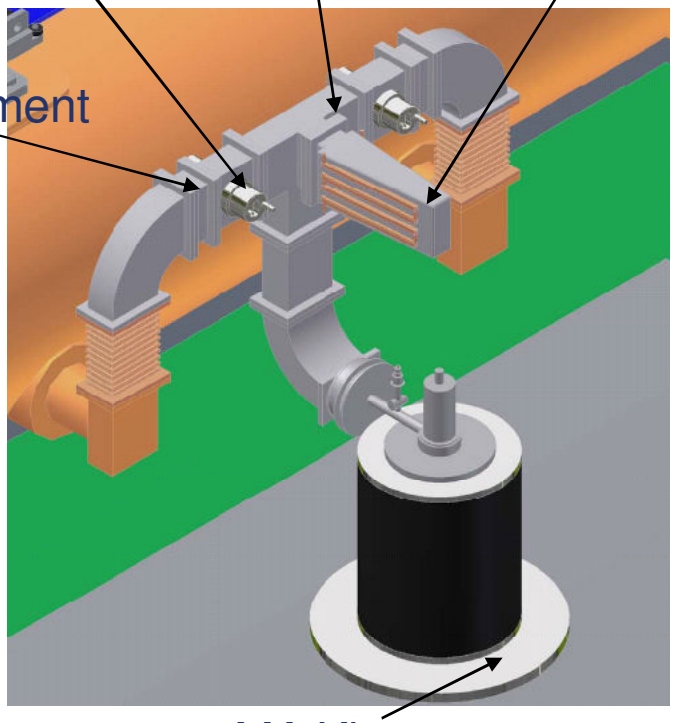

Needs more revision and R&D

- For Klystron (with the collaboration with Toshiba)
  - Lower the perveance to raise the efficiency aiming for the 60 % efficiency(1.0-1.2microPerv). Then exotic R&D to improve further efficiency.
  - Compact (silicon) oil insulation tank
  - Refined design of permanent focusing, making use of the S-band klystron experience.
- For Power Supply and Modulator
  - Actual circuit design which has the easy power upgradability (from a few MAKs to a large numbers of MAKs)
  - Disconnection device of SW developments
  - Design of reliable and cheap switching device of MA modulator.
- Cooling Issues

Important components of DRFS

Items	No	MTBF
DC Power Supply	1	50,000
possibly having redundancy	+1(Back-up)	>100,000 (Failure free/y)
Modulating Anode Modulator	1	70,000
possibly having redundancy	+1(Back-up)	>100,000 (Failure free/y)
MA Klystron	13	110,000 (KEK's recent 10 years data)
Focusing Coil— **Permanent Magnet**	13	Degaussing by gamma ray???
Coil PS	0	-
Heater Power Supply	1+1(Back-up)	70,000 (Fan)
IP PS	0	-
Preamplifier	13	>100,000 (radiation?)
Interlock module	13	
Bin module/PS	13	
Rack System with cooling	2	
Water flow SW	15	

Low Power Option of DRFS and Full Scheme (I)

Low Power Option@ 26-Cavities (1 klystron feeds 4 cavities)

= 0.5 DC P/S 0.5 Back-up
0.5 MA Pulsers 0.5 Back-up
6.5 Klystrons
26 Cavities

19.5 Magic-tee(Hybrid)

Aiming for the easy upgradeability to standard scheme
Partial sacrifice of DRFS operability

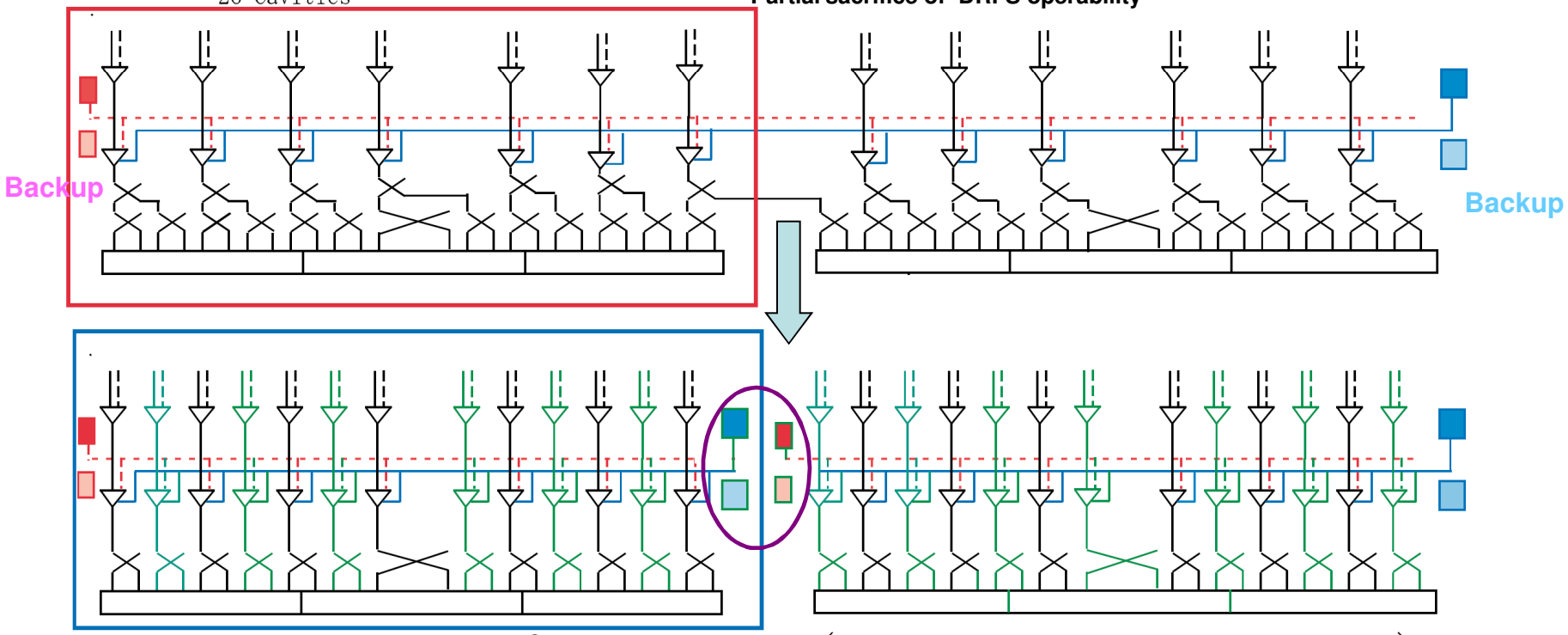

Full Power Option@ 26-Cavities (1 klystron feeds 2 cavities)

= 1 DC P/S 1 Back-up
1 MA Pulsers 1 Back-up
13 Klystrons
26 Cavities

13 Magic-tee(Hybrid)

Low Power Option of DRFS and Full Scheme (II)

Low Power Option@ 26-Cavities (1 klystron feeds 4 cavities)

= 0.5 DC P/S 0.5 Back-up 19.5 Magic-tee(Hybrid)
0.5 MA Pulsers 0.5 Back-up
6.5 Klystrons
26 Cavities

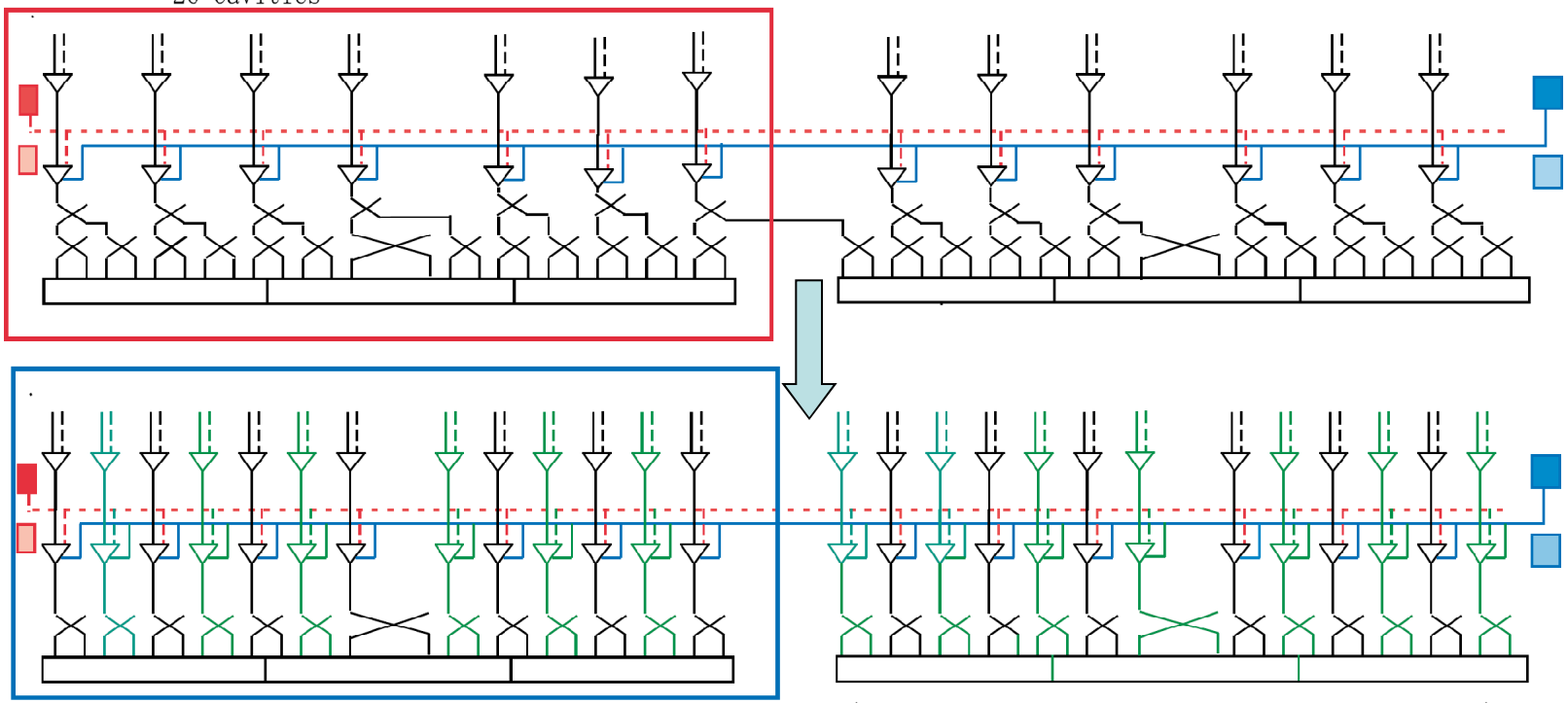

Full Power Option@ 26-Cavities (1 klystron feeds 2 cavities)

= 1 DC P/S 1 Back-up 13 Magic-tee(Hybrid)
1 MA Pulsers 1 Back-up
13 Klystrons
26 Cavities

High Available DRFS without Raising Cost

Layout for Revised DRFS Scheme

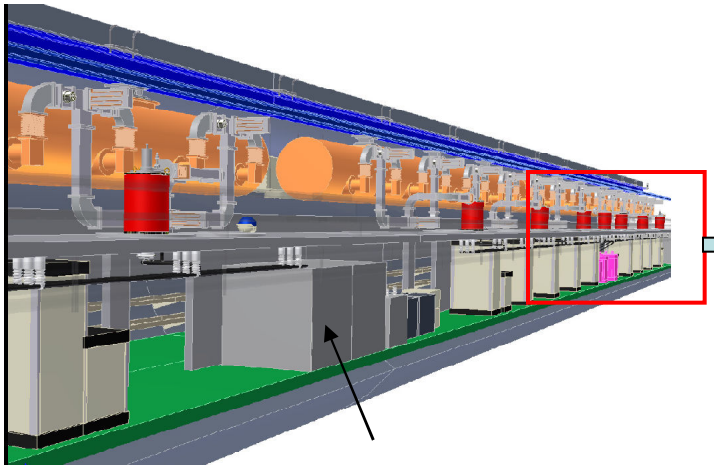

DC Power Supply Space

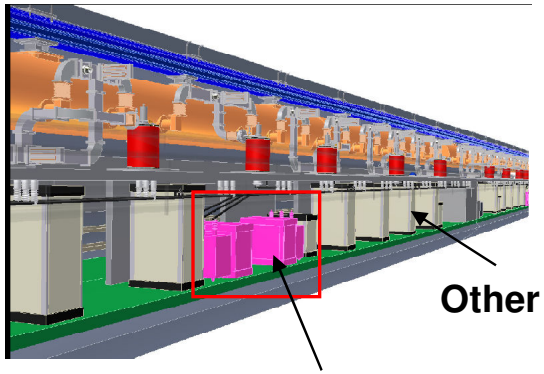

Other Racks

MA Modulator
& HLRF(+LLRF) Rack

Example of LowP
PDS Layout

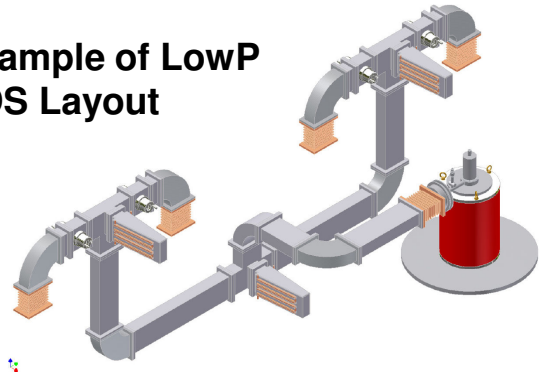

Add klystron in future

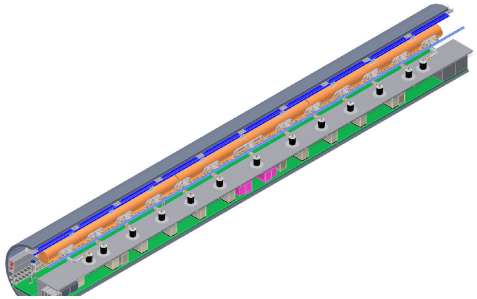

DRFS Full Scheme

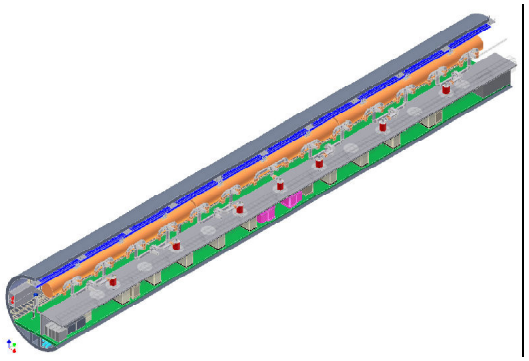

DRFS Low Power Option

Numbers of Components in DRFS

Item	Low P DRFS	Back-up	Full P DRFS	Back-up	BCD
Cavity	26		26		26
Directional Coupler	26		26		26
Magic Tee (Hybrid)	19.5		13		32
Load	39		13		24
700 k W Klystron	6.5		13		
MBK					1
Focusing PM (EM)	6.5		13		1
Coil P/S	0	0	0		1
Heater P/S	1	1	1	1	1
Pre Amp	6.5		13		1
LLRF	6.5		13		1
Interlock module	6.5		13		1-26
Trigger Module/depend on fanout					1
MA Modulator	0.5	0.5	0.5	0.5	
DC P/S	0.5	0.5	0.5	0.5	
Modulator					1
Pulse Transformer					1

Cost Impact for LowP DRFS

DRFS	Standard		Low P		Cost Impact
	No@26 Cav	Cost	No@26 Cav	Cost	%
DC PS w Backup	1	269	1	186	
MA Modulator	1	100	1	50	
MA Klystron	13	845	6.5	423	
Magic Tee	13	91	20	137	
		1305		795	60.9
BCD	**Standard**		**Low P**		**Cost Impact**
	No@26 Cav	Cost	No@26 Cav	Cost	%
Mod	1	515	0.5	297	
Kly	1	300	0.5	150	
PDS	1	345	0.5	173	
		1160		620	53.4

For red character, see the comments of slide 7 in this presentation.
For green character, this may be underestimated. Ray in SLAC may present new Estimation.

Cost Evaluation for the Low Power DRFS

- Re-evaluation from the “High Availability” webex meeting was performed as shown below.
- We made a cost evaluation of Low Power Scheme of DRFS as follows;

  DRFS “Standard” is based on the configuration of slide 4 lower figure, not the one of slide 3 lower figure.

  So “Standard” includes the DC PS backup and DC PS feeds the power to 26 MKAs.

  So both configurations has a high availability.
- Cost evaluation for DC PS was estimated as follows;

  We assume that the cost of the thyristor, capacitor and bouncer are proportional to the power increase, and transformer is proportional to the square root of the power increase.
- For BCD, I showed that the cost of the modulator is proportional to the square root of the power increase, and this may be a bit underestimated cost.

Water Cooling Comparison

Oct 31 2007

WATER AND AIR HEAT LOAD (all LCW) and 9-8-9 ML

MAIN LINAC - ELECTRON & POSITRON					
Components	Quantity Per 36m	Location	Total Heat Load (KW)		
Non-RF Components					
LCW Skid Pump 1 per 4 rf - Motor/Feeder Loss	0.25	Service Tunnel	0.60	0.60	0.60
I^2R Loss and Motor Loss (misc)	1	Service Tunnel	10.92	10.81	10.31
Fancoils (5 ton Chilled Water) 1.5 Hp	2	Service Tunnel	2.91	2.91	2.91
Rack Water Skid	0.25	Service Tunnel	0.20	0.20	0.20
Lighting Heat Dissipation ~1.3W/sf		Service Tunnel	1.65	1.65	1.65
AC Pwr Transformer 34.5-.48 kV	0.25	Service Tunnel	2.00	2.00	2.00
Emerg. AC Pwr Transformer 34.5-.48 kV		Service Tunnel	1.00	1.00	1.00
RF Components					
RF Charging Supply 34.5 Kv AC-8KV DC	1/36 m	Service Tunnel	4.0	4.00	14.0
Switching power supply 4kV 50kW	1/36 m	Service Tunnel	7.5	7.50	
Modulator	1/36 m	Service Tunnel	7.5	7.50	
Pulse Transformer	1/36 m	Service Tunnel	1.0	0.00	0.0
Klystron Socket Tank / Gun	1/36 m	Service Tunnel	1.0	6.50	6.5
Klystron Focusing Coil (Solenoid)	1/36 m	Service Tunnel	5.5	20.00	0.0
Klystron Collector	1/36 m	Service Tunnel	59.8	59.80	59.8
Klystron Body & Windows	1/36 m	Service Tunnel			
Relay Racks (Instrument Racks)	1/36 m	Service Tunnel	10.0	10.00	10.0
Attenuators	2/36 m	Service Tunnel	1.0	0.00	0.0
Waveguide (in service tunnel)	1/36 m	Service Tunnel			
Waveguide (in penetration)	1/36 m	Penetration	0.6	0.00	0.0
Waveguide (in beam tunnel)	1/36 m	Beam Tunnel	4.0		
Circulators With loads (isolator)	26/36 m	Beam Tunnel		0.00	0.0
Loads	24/36 m	Beam Tunnel	22.8	22.80	22.8
Subtotal RF unit Only			109	108	103
Total RF			144	157	132

RDR

DRFS Scheme B

DRFS Scheme A

Assume the same efficiency with J-Parc DC PS

Slight increase including the 2 MA modulators

Some amount of increases including the13 MA modulators

Interlocks and operability

	interlock	Effects	Response	Faital breakdown?
Modulator	DC down	13 klystrons will stop	(back-up necessary?)	Yes
	MA down	13 klystrons will stop	backup PS will work simultaneously.	No
	Heater PS	13 klystrons will stop	backup PS will work simultaneously.	No
Klystron	Heater open	One klystron will stop	ignore	No
	Heater short	One klystron will stop	Fuse will work.	No
	Discharge	One klystron will stop	Fuse will work for fatal discharge.	No
	Ceramic discharge	One klystron will stop	Fuse will work.	No
	Emission decrease	One klystron will stop	LLRF will control phase/amplitude.	No
	Magnet	No magnet PS	No magnet PS.	No
	RF window	One klystron will stop	RF off*	No
	RF discharge	One klystron will stop	RF off*	No
	RF reflection	One klystron will stop	RF off*	No
Cavity	Input coupler	One klystron will stop	RF off*	No
	Cavity quench	One cavity will be detuned.	Cavity detune	No
	Piezo Mis-control	One cavity failure	RF off*	No
	Cavity vacuum	One cryomodule	RF off*	No

* The effects of "RF off" are limited because 2 (4) cavities driving from single klystron.

Appendices
Operability and Availability

Main components which potentially produce a serious interrupt of operation (1)

- Klystron: MTBF=110,000hr, ILC Op/year=5000hr, then 325 tubes are failured. Fraction=4.5%

  If overhead is more than 4.5%, klystron failures don't affect to the ILC operation. Repair is conducted in summer shutdown. If not, unscheduled maintenance would be necessary when failured fraction exceeds overhead.
- DC Power supply: MTBF of 70000hr is assumed. Fraction=7.1%

  This fraction exceeds the allowable overhead. It is possible to introduce backup DC power supply as the redundancy as MA modulator. Cost impact is discussed later.
- MA Modulator: Assume MTBF=from 50,000 to 70,000 hr. Back-up modulator covers the another modulator's failure. Since two modulators failures at the same time are very rare, we can expect no failure in a year operation. Failured MA modulator are repaired or exchanged in the scheduled shutdown.
-

Maintenance in Scheduled Shut down

- Here let's consider the repairing work of main components of DRFS in scheduled Shut Down.
- DC PS and MA Modulator of 650, MA Klystron of 8450

  Operation hr of a year; 5,000hrs. Scheduled shut down of 3 months
- No. of Failure components in a year
  - DC PS : 65 if MTBF of 50,000 hr (assume)
  - MA Modulator: 46 if MTBF of 70,000hr (assume)
  - MA Klystron: 384 if MTBF of 110,000hr (assume)

Klystron Exchanging Working In Scheduled Shut down

- Total 384 tubes,8 Shafts, --48 tubes@shaft, 1 carrier with 8 tubes→8 go and come then klystron delivering takes 4 hrs with 2 person
- One Klystron disassemble and install

	Klystron Exchange Work (for 2 person)	
Step	**Content**	**time(min)**
0	Move Klystron from Transfer P	10
1	Dicconnect cable	10
2	Disconnect Waveguide	15
3	Klystron Disassemble	15
4	Klystron Exchange Pullup	15
5	Klystron Installation	15
6	Waveguide Connection	15
7	Cabling work	15
	Total	**120**

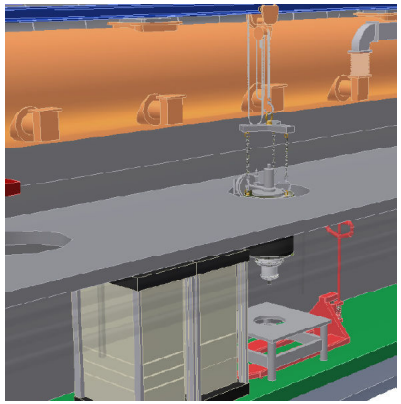

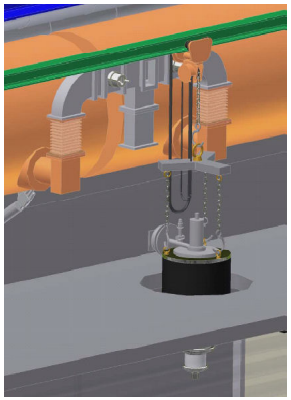

total→ 2hrs*48=96hrs

- Average moving time from point to point→20 min , then total 12 hr(20*48).
- At 1 shaft, Total112hrs(4+96+12) with 2 person =14 days with 2 person
- For 384 tubes, 112 days with 2 person (224 days/person)
- Independent supervising at each shaft, 2.8 weeks work for replacing the tube with 2 person in the every shaft.

MA modulators Exchanging Working in Scheduled Shut down

- Total 46 MA modulators, 8 Shafts, --5.75 MA modulators @shaft, 1 carrier with 2 MA modulators →3 go and come

  then MA modulators delivering takes 2.6 hrs with 2 person
- One MA modulators disassemble and install
  - Exchange whole Rack of MA Modulator
  - Disconnecting the cable and remove failure set
  - Install new MA modulator
  - Cabling Work

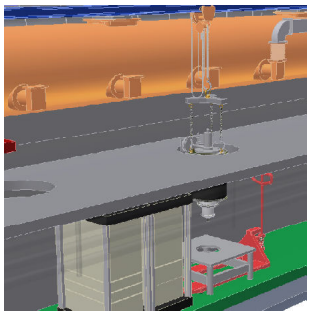

(1 MA Modulator Exchange takes 2 hrs with 2 person)

total→ 2hrs*6=11.5hrs

- Average moving time from point to point→20 min , then total 2 hr(20*6)
- At 1 shaft, Total16 hrs(2.6+11.5+2) with 2 person =2 days with 2 person
- For 46 MA modulators, 16 days with 2 person (32 days/person)
- Independent supervising at each shaft, 0.4 weeks work for replacing the MA modulators with 2 person in the every shaft.

DC Power Supply Repairing in Scheduled Shut down

- In the case of DC power supply, it is necessary to diagnose the failure of the DC power supply by the special engineer. Assume one day (8 hrs)@failure unit to find out the source of failure.
- For the replacement, it is possible to use the same calculation of the required human resources.

- Total 65 DC Power Supply Failure, 8 Shafts, --8 DC Power Supply @shaft, then replacing parts delivering takes 4.3 hrs with 2 person
- One DC power supply disassemble and install
  - Disconnecting the cable and remove failure set
  - Replace the parts of the failure
  - Cabling Work

(1 DC power supply Exchange takes 11 hrs including diagnosing time with 2 person)

total→ 11hrs*6=11.5hrs

- Average moving time from point to point→20 min , then total 3 hr(20*9)
- At 1 shaft, Tota96 hrs(4.3+89+3) with 2 person =12 days with 2 person
- For 65 DC Power Supply , 12 days with 2 person (242 days/person)
- Independent supervising at each shaft, 2.4 weeks work for replacing the DC power supply with 2 person in the every shaft.

Maintenance of Main Linac in Scheduled Shut down in LowP

- Here let's consider the repairing work of main components (Only for the Main Linac) of DRFS in scheduled Shut Down for the LowP Option.
- DC PS and MA Modulator of 280 in Main Linac, MA Klystron of 3640 Operation hr of a year; 5,000hrs. Scheduled shut down of 3 months
- No. of Failure components in a year
  - DC PS : 28 if MTBF of 50,000 hr (assume)
  - MA Modulator: 20 if MTBF of 70,000hr (assume)
  - MA Klystron: 165 if MTBF of 110,000hr (assume)

Resources required for fixing main components of DRFS in Main Linac (Low Power Option)

- Resources Per 1 shaft
  - Klystron replacement of 165= 2.5 weeks*person=100 hrs*person
  - MA modulator replacing of 20=0.35 weeks*person=14 hrs*person
  - DC power supply repairing of 28=2.1 weeks*person=83 hrs*person

    (including engineer work of 1.4 weeks*person(55 hrs*person)

    Is this overestimate???)

    =4.95 weeks*person(198 hrs*person) per shaft
- Resources of whole LC

  =39.6 weeks*person=1584 hrs*person

We needs to count another labor relating with the failure except for above causes.

Tentative Concept for Klystron Replacement in Scheduled Shut Down

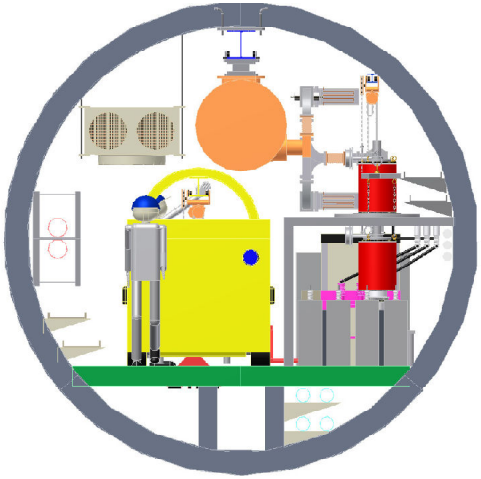

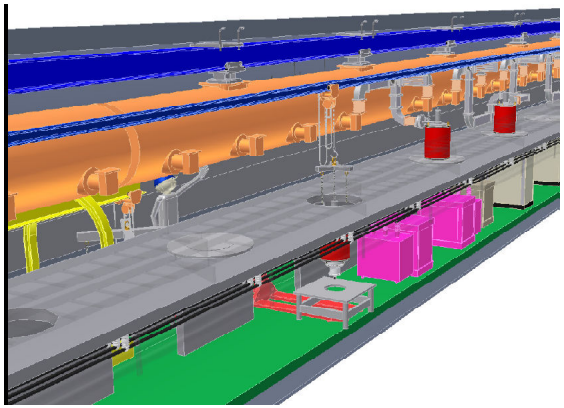

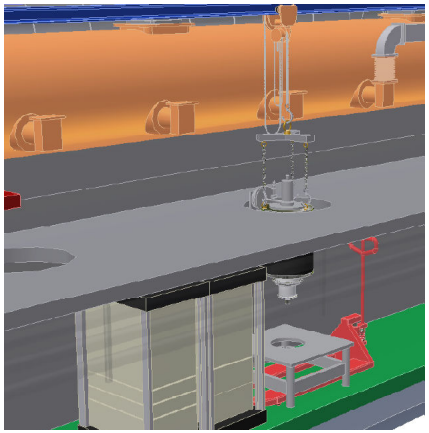

Tunnel Size Good?

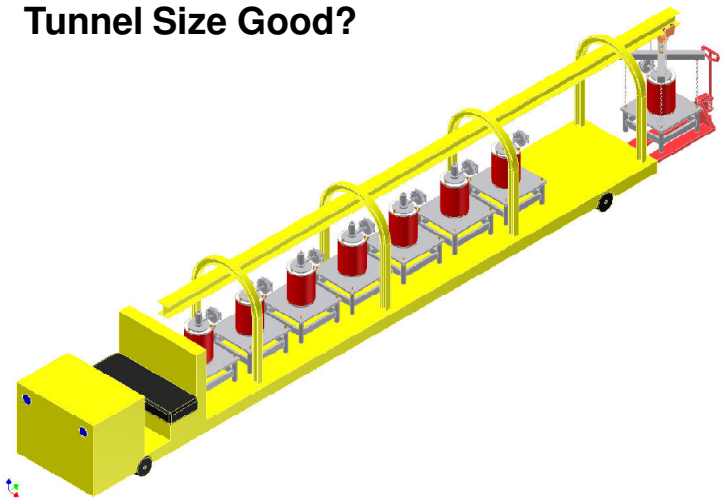

Total 46 MA modulators, 8 Shafts, --5.75 MA modulators @shaft,
1 carrier with 2 MA modulators →3 go and come
then MA modulators delivering takes 2.6 hrs with 2 person
One MA modulators disassemble and install
Exchange whole Rack of MA Modulator
Disconnecting the cable and remove failure set
Install new MA modulator
Cabling Work
(1 MA Modulator Exchange takes 2 hrs with 2 person)

Summary

- This presentation showed the Low Power Option of ILC in the case of DRFS Scheme.
- A high available full DRFS, in which DC PS and MA modulator with backup unit respectively connect to 26 MA klystrons which feed powers to two SC cavities.
- Low power option of DRFS are proposed in this presentation and it has an easy pass to full DRFS.
- Cost comparison is shown on this presentation.
- Study of cooling issues has just started and rough trend is shown.
- Maintenance scheme and improved layout drawing of DRFS is also shown in this presentation.