Damping Rings Design Work at the Cockcroft Institute

Andy Wolski, Kai Hock, Maxim Korostelev, Kosmas Panagiotidis, Alex Thorley
University of Liverpool Department of Physics, and the Cockcroft Institute

Oleg Malyshev
STFC/ASTeC, and the Cockcroft Institute

Norbert Collomb, Steve Postlethwaite, (John Lucas)
STFC/Technology

ILC GDE Meeting
Beijing, 27 March 2010

Goals for Damping Rings R&D at Cockcroft Inst.

Lattice design (MK)

- Make necessary modifications and improvements to the present 6.4 km baseline lattice.
- Characterise and optimise dynamic aperture.

Vacuum system technical design and costing (OM/NC/SP/(JL))

- Develop technical design for vacuum system and magnet supports.
- Produce costing based on technical design.

Impedance model and instabilities (MK/AT)

- Develop impedance model based on technical design of vacuum system.
- Evaluate impact of impedance on beam dynamics.

Low-emittance tuning (KP)

- Evaluate techniques for low-emittance tuning based on experience at ATF, CesrTA, and other machines.
- Specify requirements for diagnostics and correction systems.

Total effort: approximately 3.2 FTE (including 1 PGR student)

DCO4 Lattice (August 2009) Layout

- Racetrack layout with FODO arc cells.
- Electron and positron beams circulate in opposite directions.
- Lattices for the electron and positron damping rings are identical.
- Positron ring dipoles are directly above the electron ring dipoles.
- RF cavities of the e+ and e- rings do not overlap each other.
- Vertical separation of beamlines set by cryostat dimensions.
- Single tunnel for injection and extraction beam lines can be used.

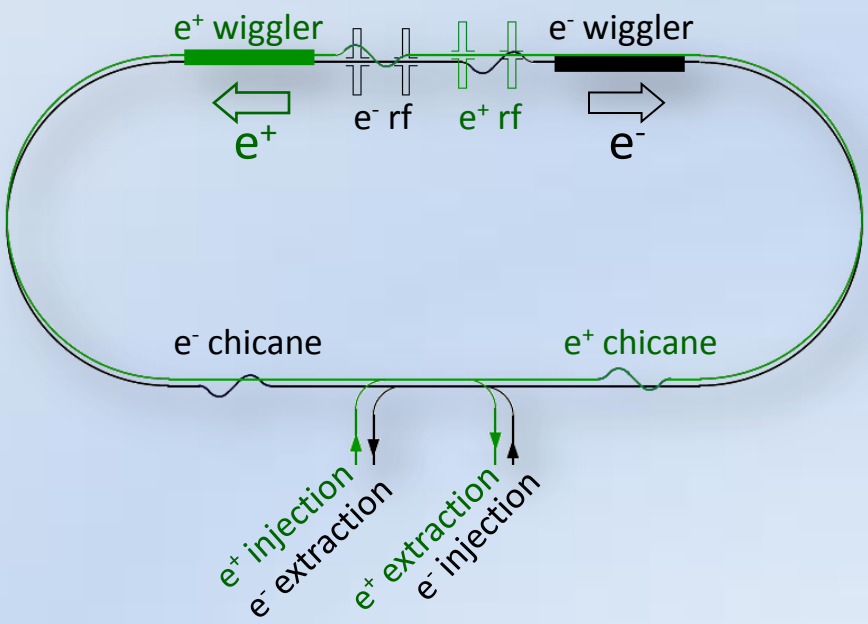

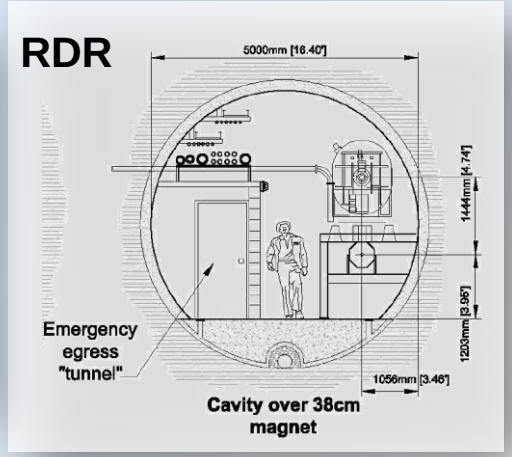

Lattice Functions

Arc Cell

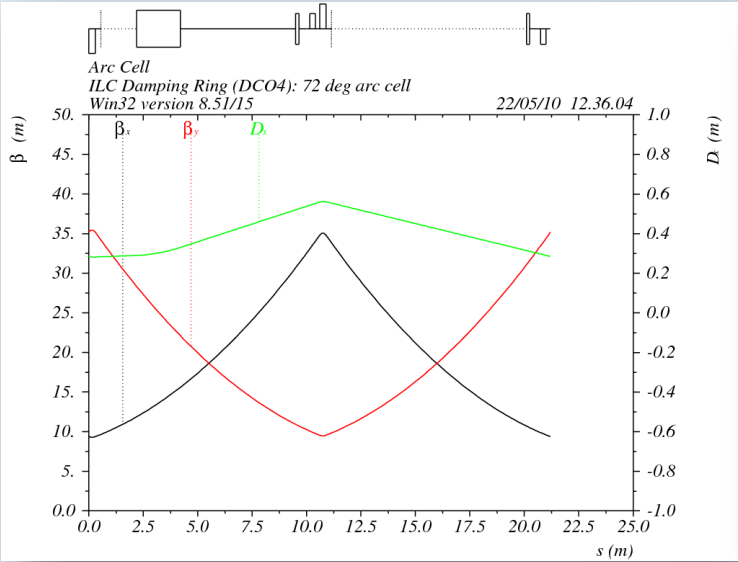

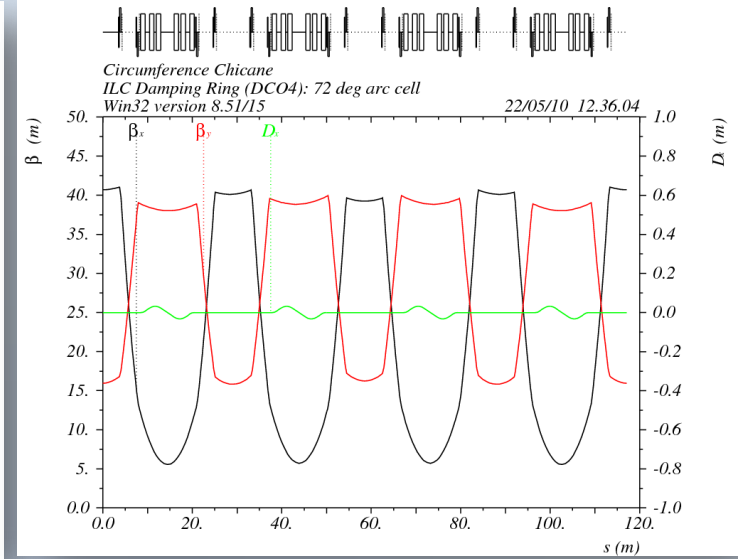

Chicane

Wiggler Straight

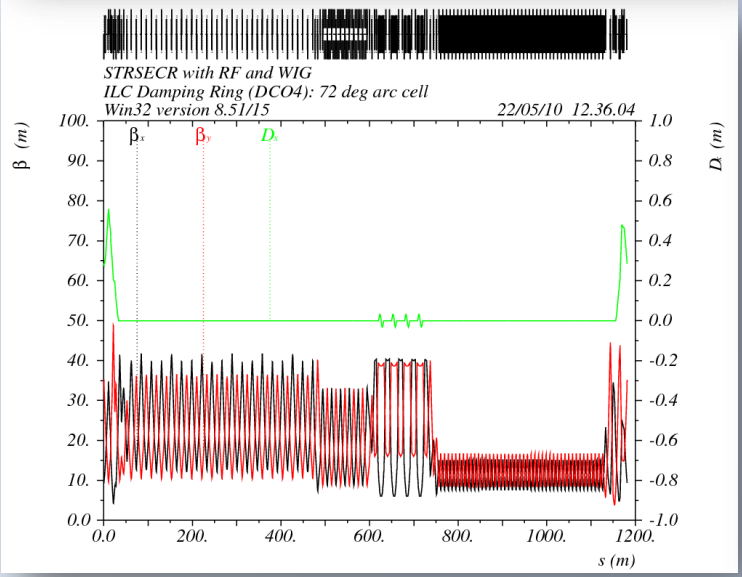

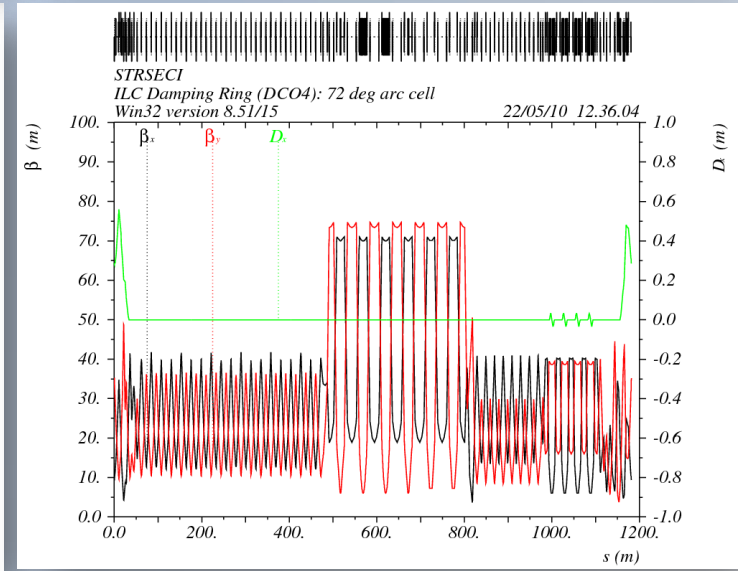

Injection/ Extraction Straight

DCO4 Parameters

Circumference	6476.4 m		
Beam energy	5 GeV		
RF frequency	650 MHz		
Transverse damping time	21.1 ms		
Natural rms bunch length	6.0 mm		
Natural rms energy spread	1.27×10^{-3}		
Wiggler	216 m total length; 400 mm period; 1.6 T peak field		
Arc cell phase advance	72°	90°	100°
Momentum compaction factor	2.9×10^{-4}	1.6×10^{-4}	1.3×10^{-4}
RF voltage	32.6 MV	20.4 MV	17.1 MV
Normalised natural emittance	6.4 mm	4.4 mm	3.9 mm
Tunes (horizontal/vertical)	61.12/60.41	71.12/71.41	76.12/75.41
Natural chromaticity (hor./vert.)	-71.0/-72.6	-89.2/-91.0	-99.8/-100.7

Flexibility in momentum compaction factor allows initial running at relatively low rf voltage, with upgrade to higher momentum compaction factor possible if required to raise instability thresholds.

Lattice Design: Timing Schemes

Circumference of 6476.4 m (harmonic number 14042) provides good flexibility for varying bunch charge and spacing, while meeting the various parameter constraints in the main linac.

Damping Rings Fill Pattern							
DR bunch spacing	DR RF buckets	2	2	2	2	4	4
Pattern repetition factor	p	117	90	78	65	58	32
Bunches per even-numbered minitrain	f2	0	0	0	0	23	23
Gaps per even-numbered minitrain	g2	0	0	0	0	30	126
Bunches per odd-numbered minitrain	f1	45	45	45	45	22	23
Gaps per odd-numbered minitrain	g1	30	66	90	126	30	122
Linac average current	**milli-amps**	**9**	**9**	**9**	**9**	**9**	**5**
Derived Parameters							
Ring harmonic number		**14042**	**14042**	**14042**	**14042**	**14042**	**14042**
DR circumference	meters	6476	6476	6476	6476	6476	6476
DR average current	milli-amps	405	405	405	405	401	226
Total number of bunches		5265	4050	3510	2925	2610	1472
Bunch population	$x10^{10}$	1.04	1.35	1.56	1.87	2.07	2.07
Extraction kicker interval	DR RF buckets	120	156	180	216	240	432
Linac bunch spacing	Linac RF buckets	240	312	360	432	480	864
Linac bunch spacing	nanoseconds	184.62	240.00	276.92	332.31	369.23	664.62
Linac pulse length	**microseconds**	**971.82**	**971.76**	**971.72**	**971.67**	**963.32**	**977.65**

Dynamic Aperture: 72° Arc Cell

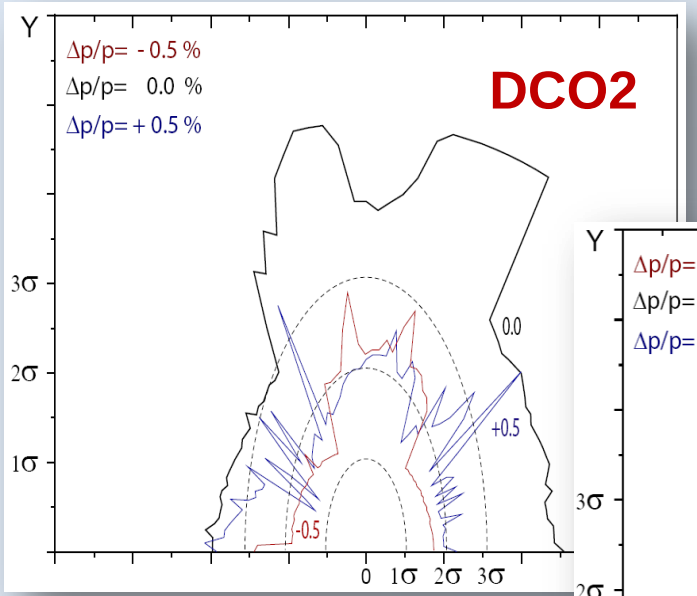

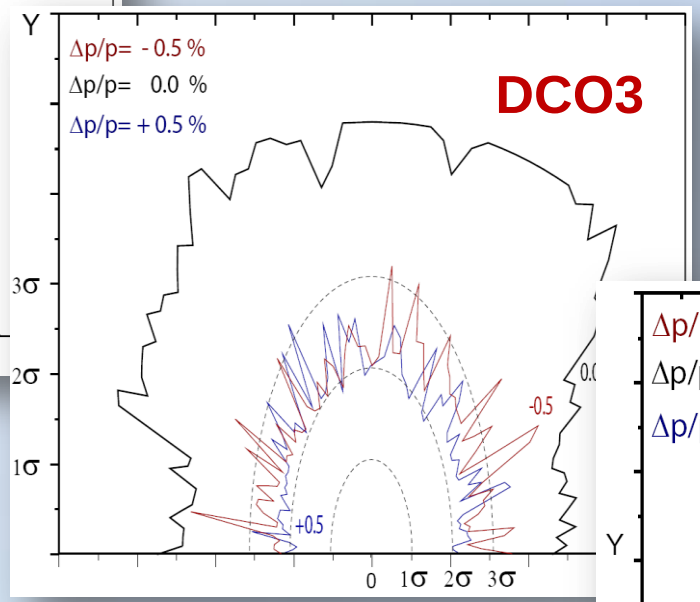

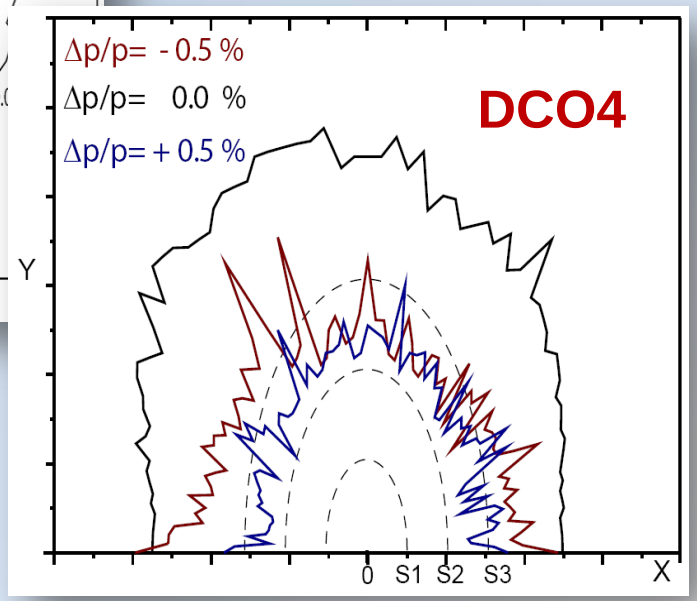

Dynamic aperture has improved from original post-RDR design.

DCO4 Dynamic Aperture

72° **90°** **100°**

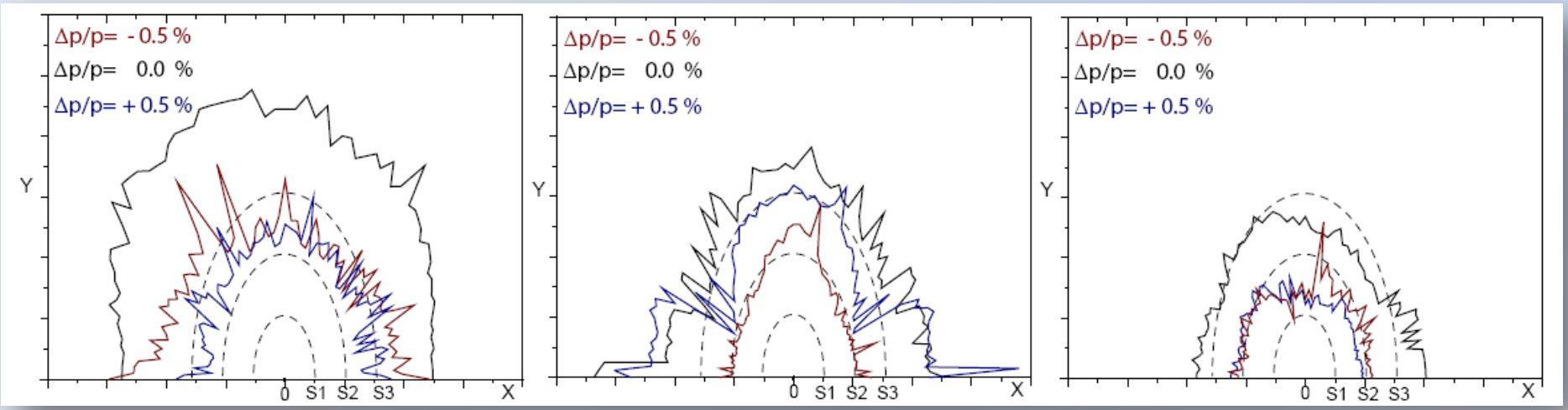

Interleaved sextupole scheme

Non-interleaved sextupole scheme

Interleaved sextupole scheme

- Dynamic aperture looks good for 72° and 90° arc cell phase advance.
- Dynamic aperture reduces (as expected) for 100°, but may be sufficient.
- More careful study is needed to understand the acceptance with realistic injection distribution, injection errors and tuning errors.

Frequency Map Analysis: 72° Arc Cell

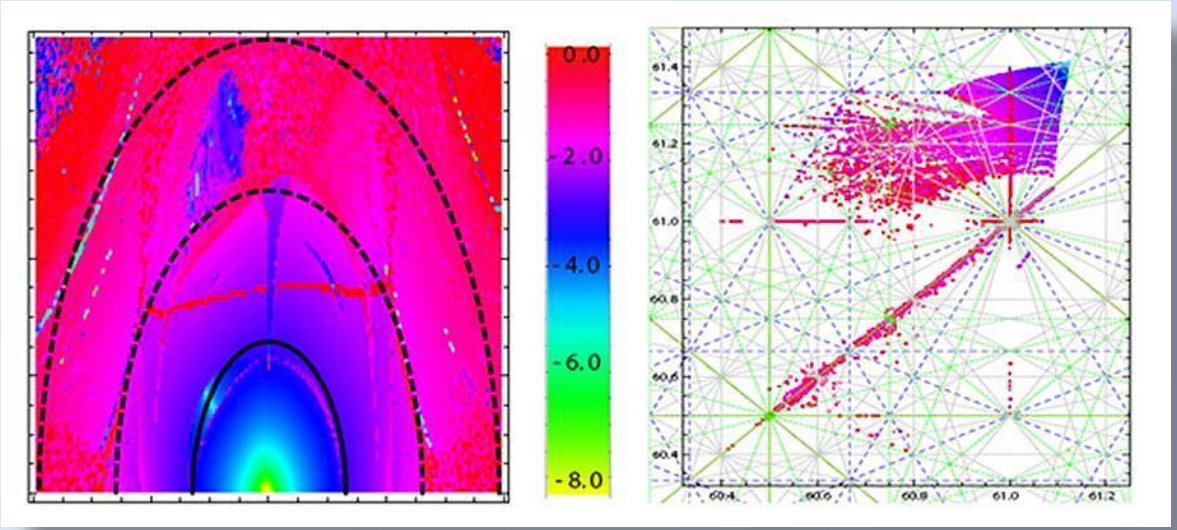

Integer parts of horizontal and vertical tunes equal: coupling resonance is strongly driven.

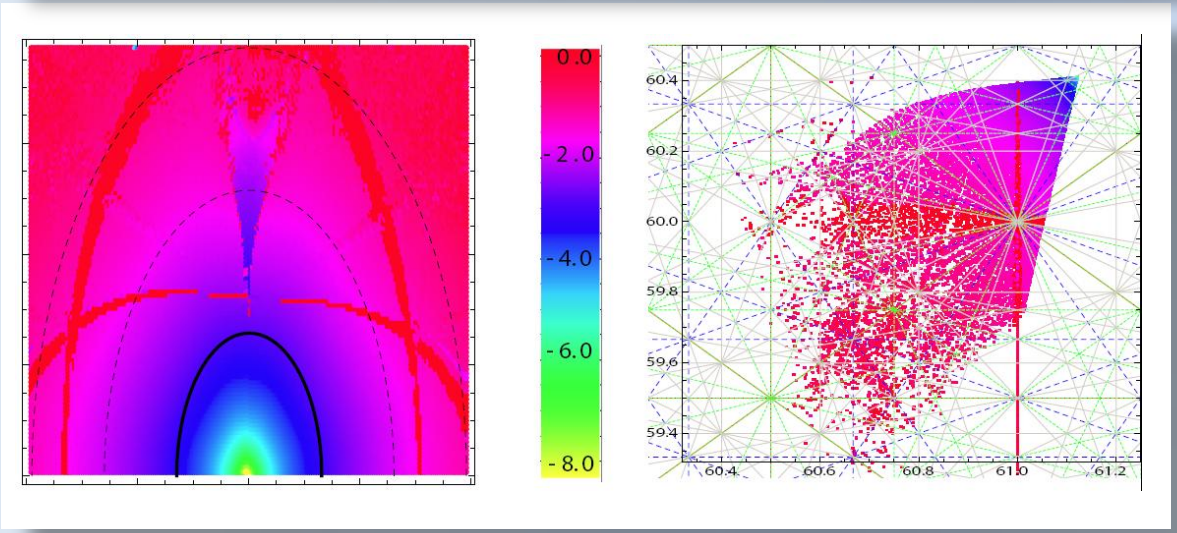

Vertical tune reduced by one integer: dynamics are substantially improved.

Vacuum System Design

- Vacuum system is based on NEG coating.
  - Specified vacuum (set by electron cloud and ion effects) can be reached very efficiently, and at relatively low cost.
  - Only one ion pump used per arc cell (in antechamber downstream of dipole).
- Vacuum gas dynamic model (including estimated impact of electron cloud) is complete for all sections except wiggler.
- Without sufficient pumping, ion-induced pressure instability would be a threat to the positron damping ring.
  - EUROTeV Report 2008-058
- New NEG coating developed by ASTeC can be activated at 160°C (lower than CERN coating by 20°C).
  - Electron-stimulated desorption studies with the new coating have begun (September 2009).
- Antechamber is included in arc sections downstream of dipoles to reduce the number of photons in the main chamber (to help mitigate electron cloud).

Vacuum System Technical Design and Costing

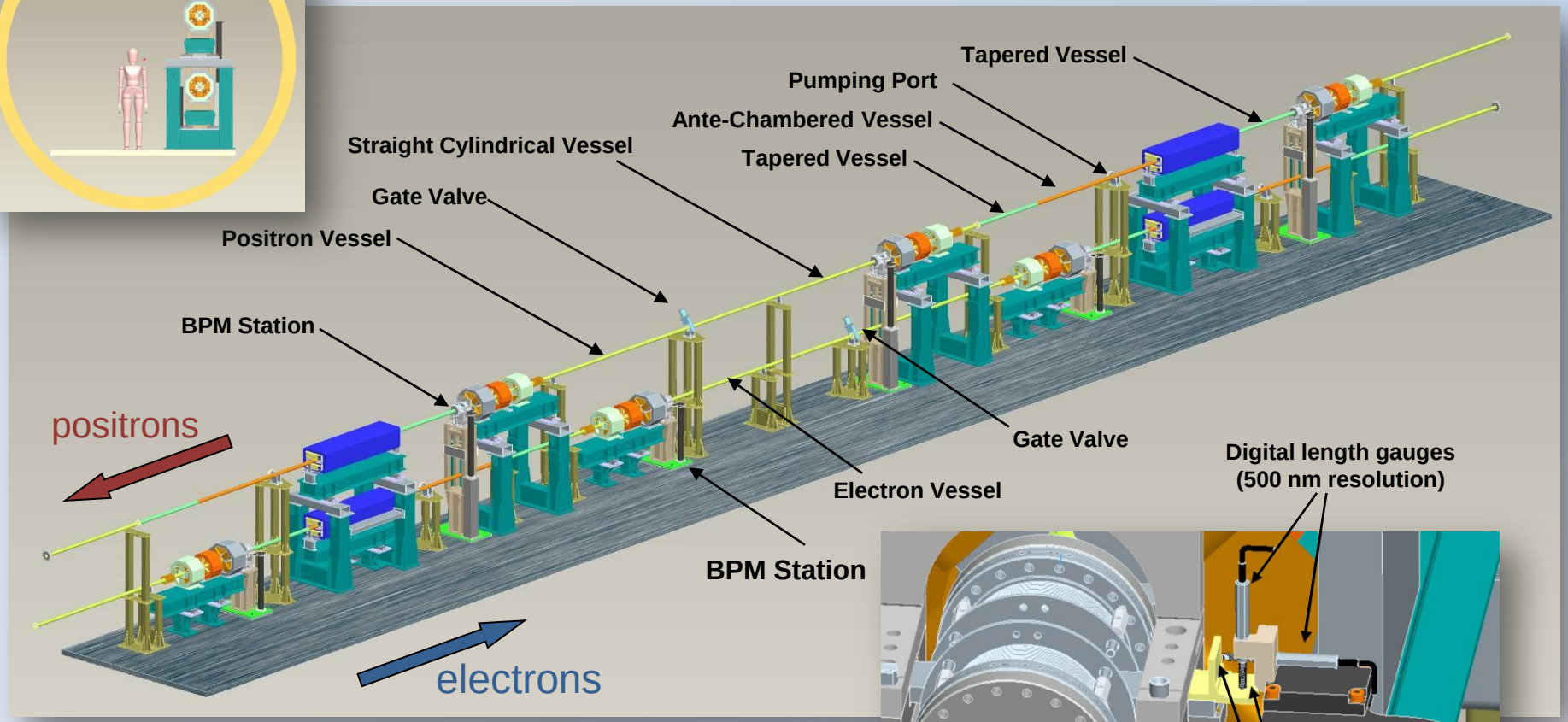

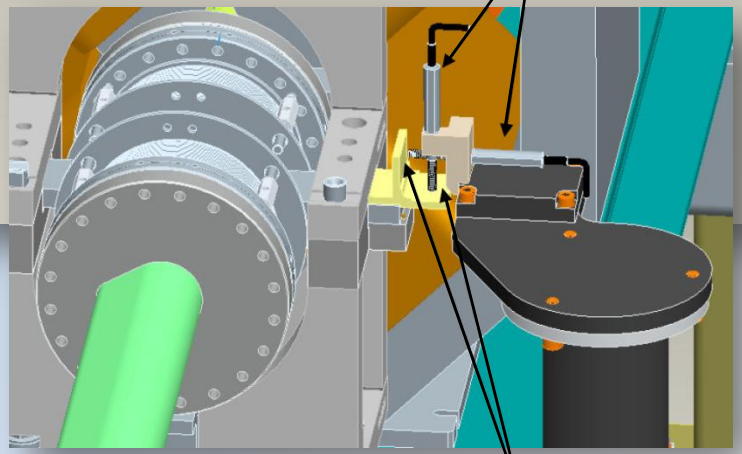

Arc cell technical design is essentially complete (to the appropriate level of detail).

Vacuum System Technical Design: Wiggler

We have now made progress with the wiggler section.

The large synchrotron radiation loads make this region particularly challenging.

Konstantin Zolotarev (BINP), is applying his analysis tools (used for the PETRA III and CLIC DR wigglers) to calculate the synchrotron radiation power distribution in the wiggler section.

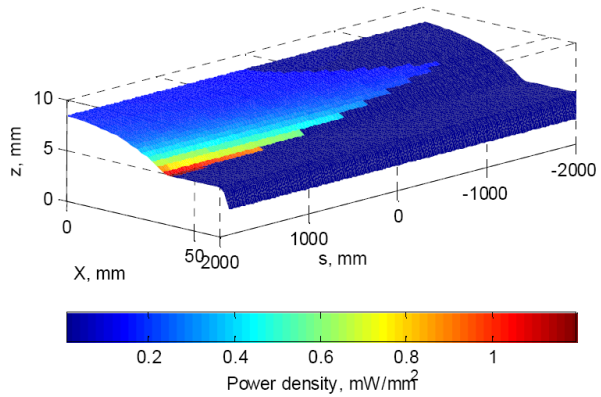

Figure 4: Power density distribution across the wiggler chamber (one quarter is shown).

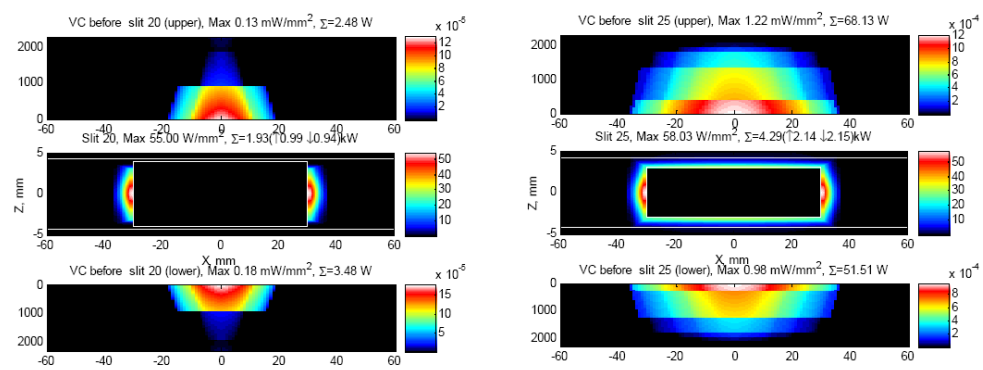

Figure 6: Power density distribution for absorbers 25 (left) and 20 (right) and for upper and lower halves of the vacuum chamber before them.

Left: power density in PETRA III wiggler, M. Tischer, K. Zolotarev et al, proc. EPAC'06.

Right: power density in CLIC DR wiggler, V.S. Kuzminykh, E.B. Levichev, K. Zolotarev, CLIC note 658.

Vacuum System Technical Design: Wiggler

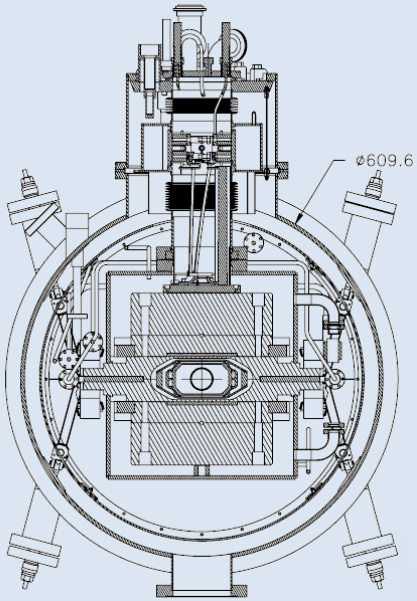

Wigglers based on CESR-c hybrid superconducting wigglers (left).

Peak field	1.6 T
Period	400 mm
Unit length (magnet)	2.45 m
Total length per ring	88 × 2.45 m = 215.6

Engineering model now includes wiggler "envelope", vacuum chamber, photon stop, quadrupole and BPM.

Chamber in wiggler itself is extruded aluminium; antechamber fitted with NEG strips for pumping; grooved surfaces top and bottom for electron cloud suppression.

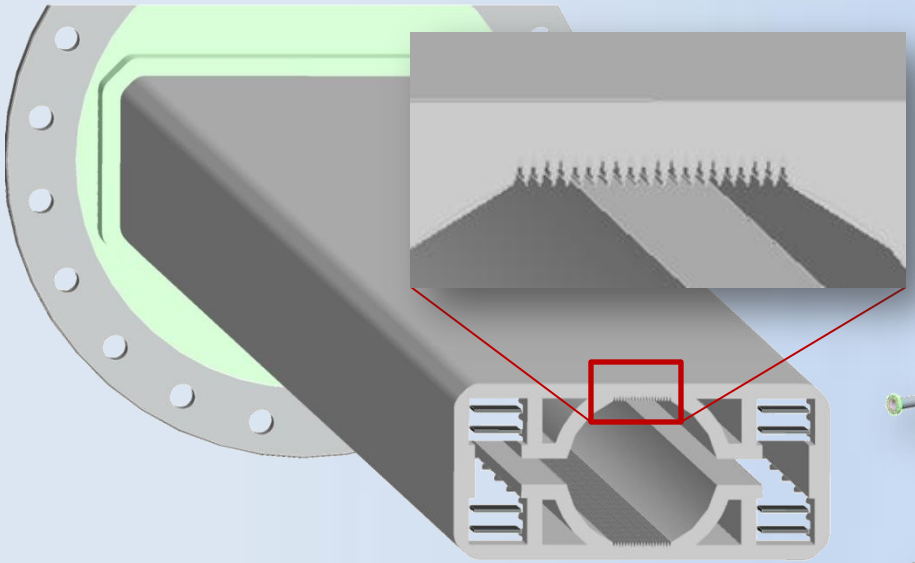

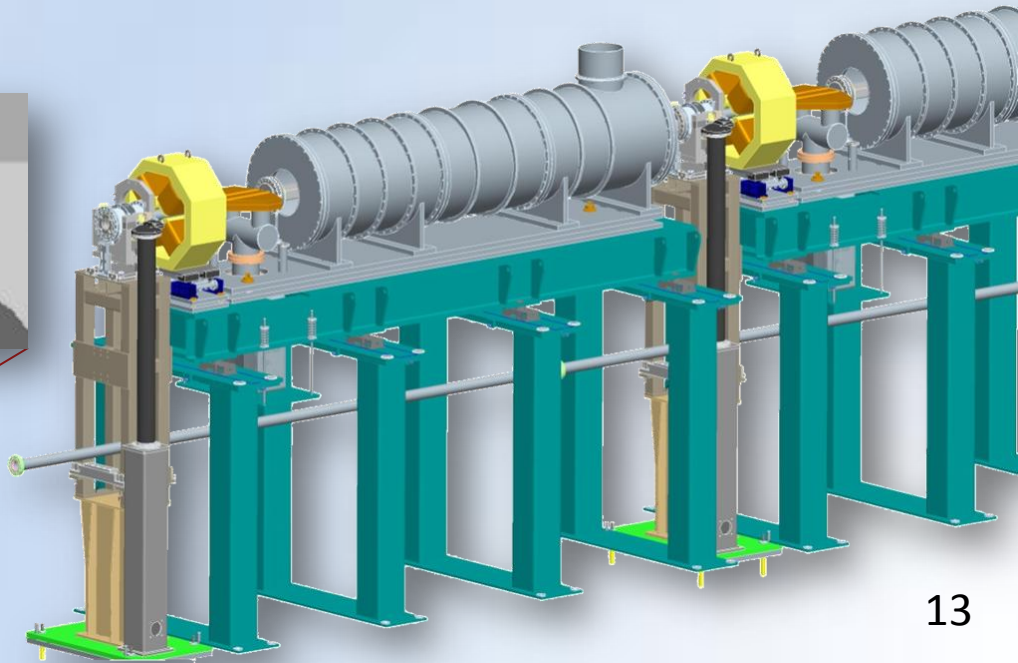

Wiggler Section

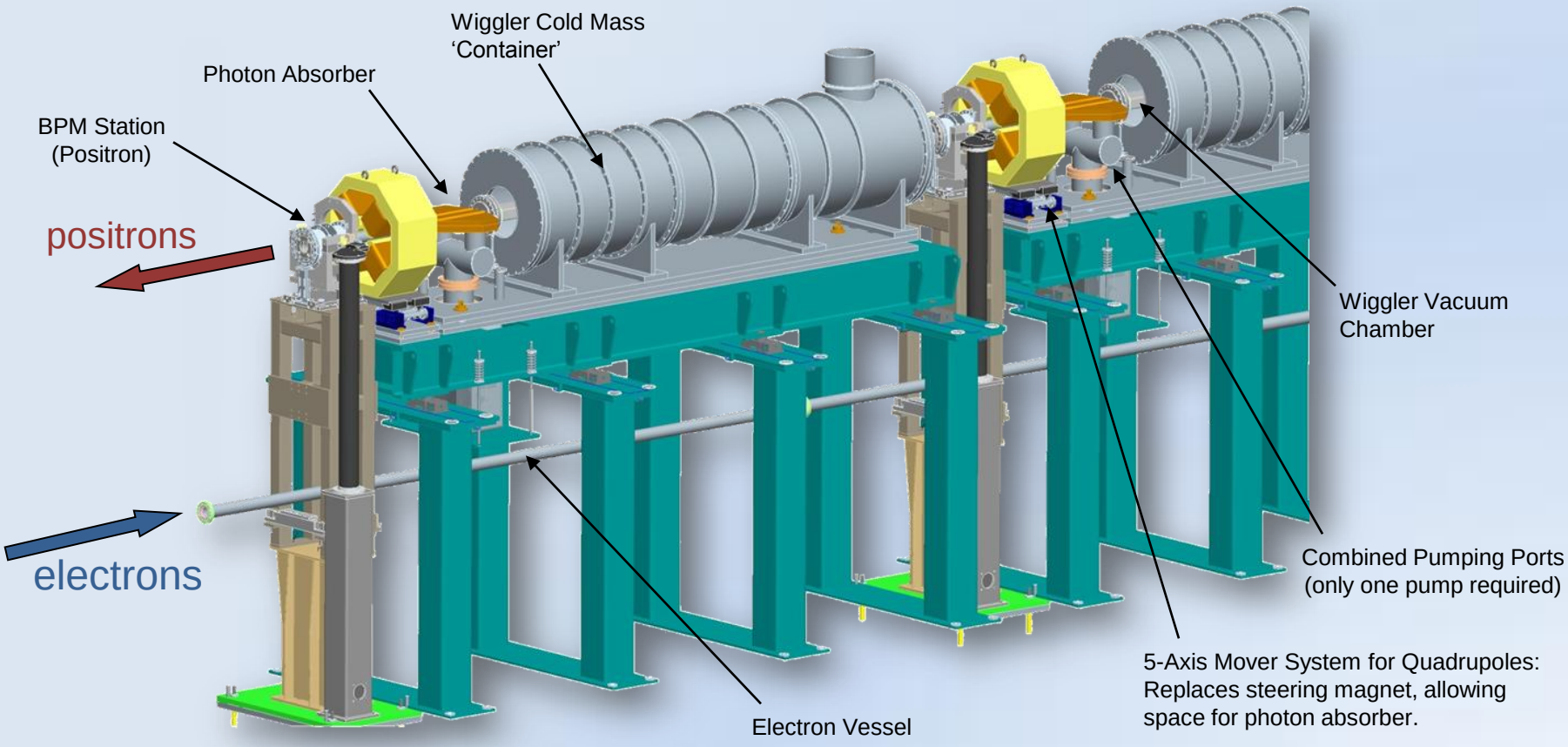

The photon absorber is a key component. Issues include:

- Effective shielding of downstream components from synchrotron radiation.
- Power loads (40 kW per wiggler) and cooling.
- Machine impedance.

Photon Absorber

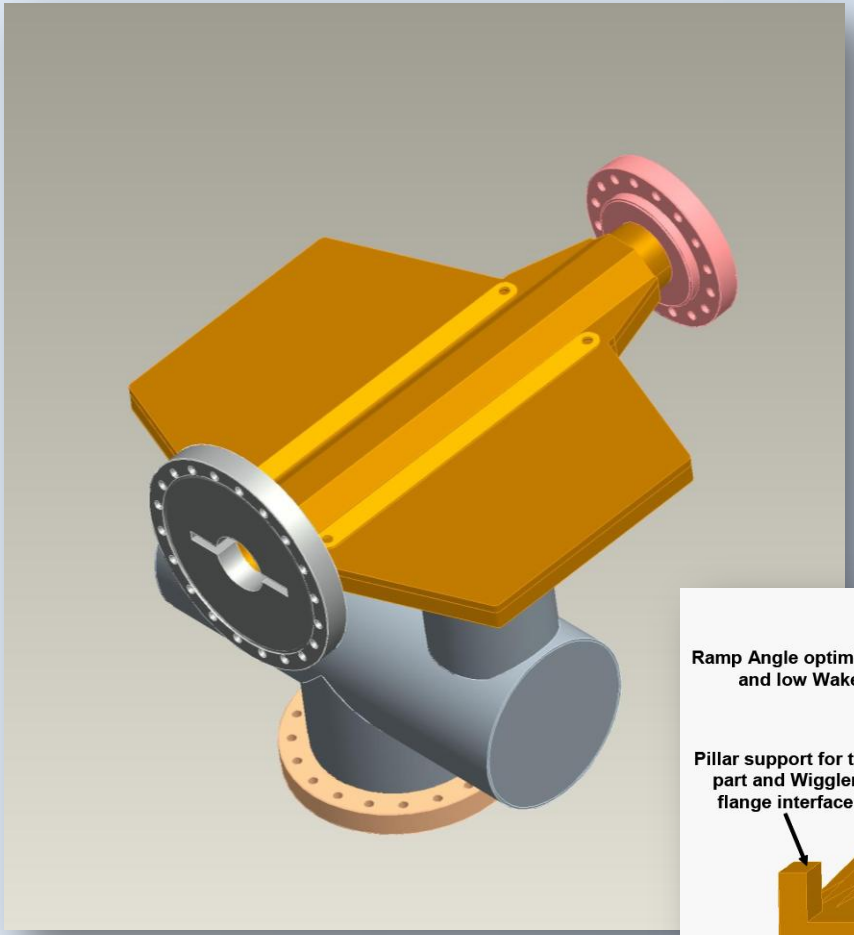

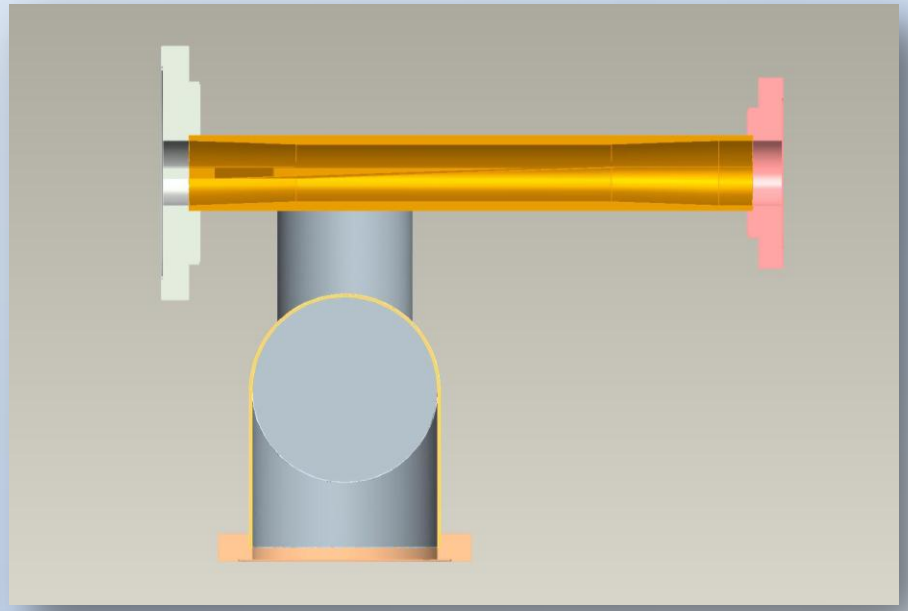

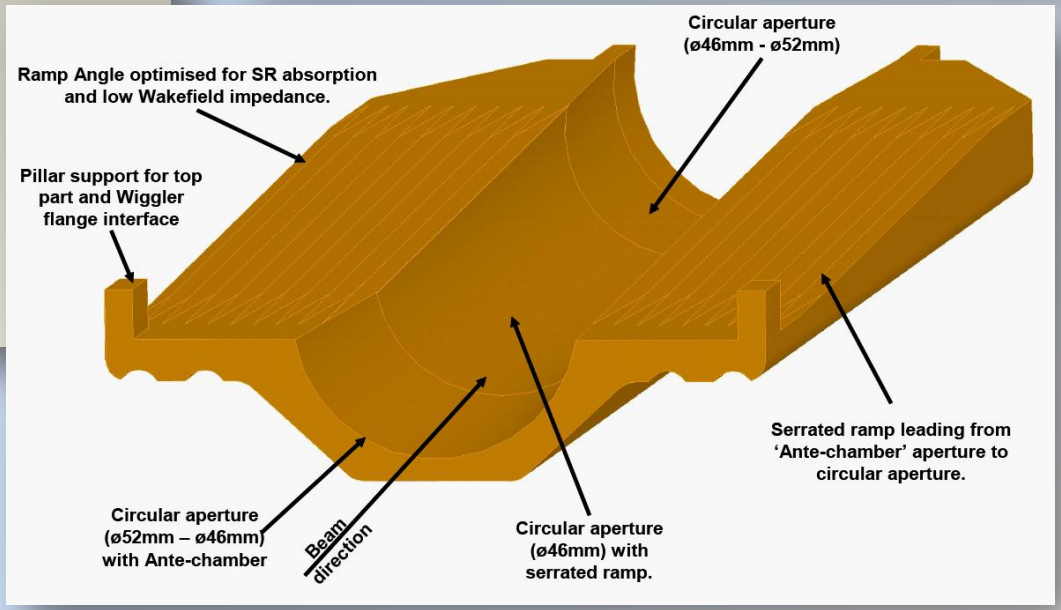

Will it work?

Studies are in progress…

Impedance Model: Original BPM Design

Results from roughly one year ago:

- Wake function computed using HFSS (problematic!)
- Potential well distortion (PWD) and instability threshold computed using parallel tracking code (running on GPU).
- Excellent agreement between tracking code and Haissinski estimate for PWD.
- Rather significant bunch lengthening, and instability threshold at or below 2×10^{10} particles/bunch – but wake function not reliable.

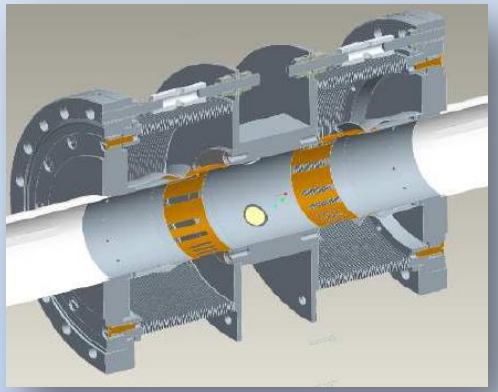

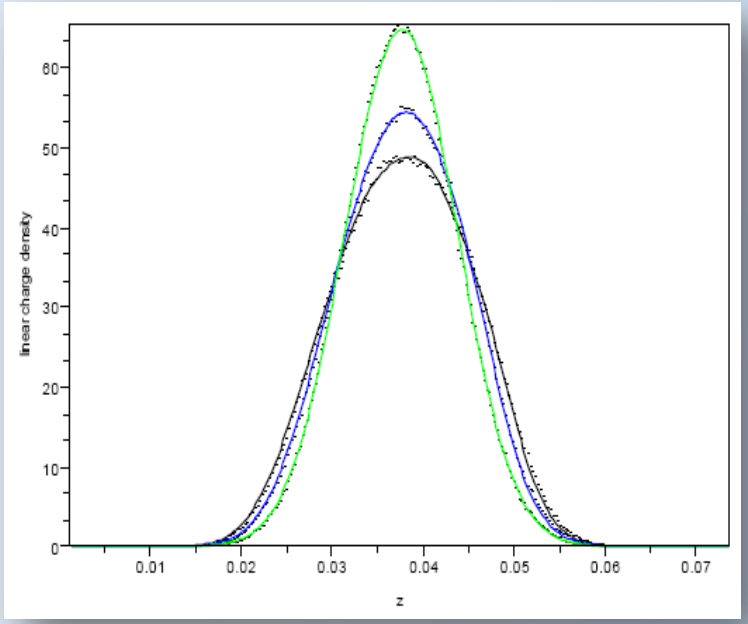

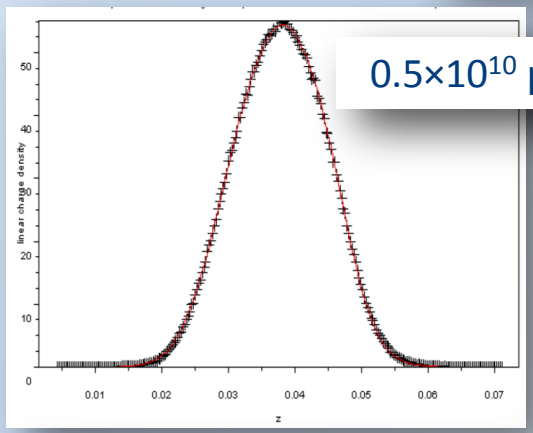

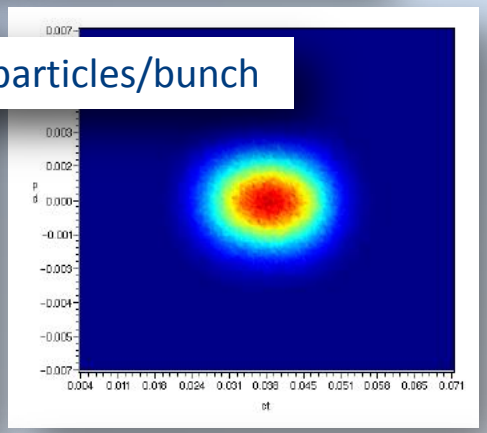

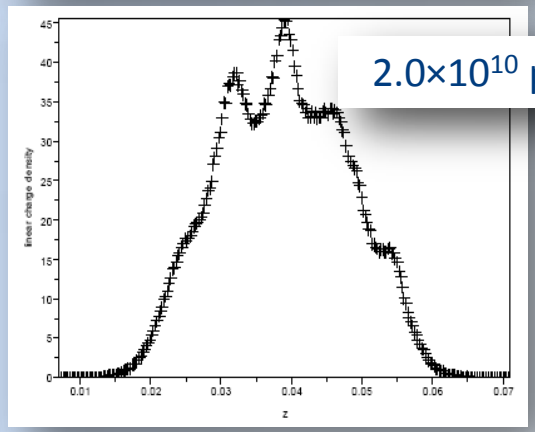

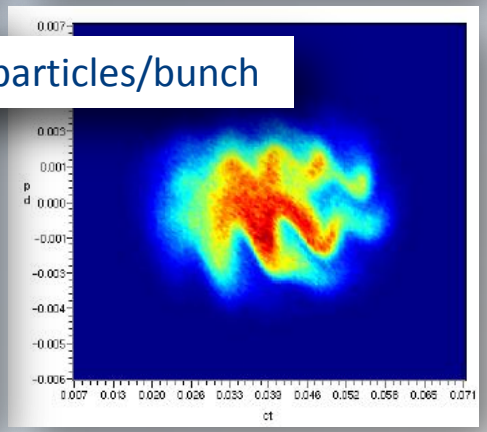

Impedance Calculation with Particle Studio

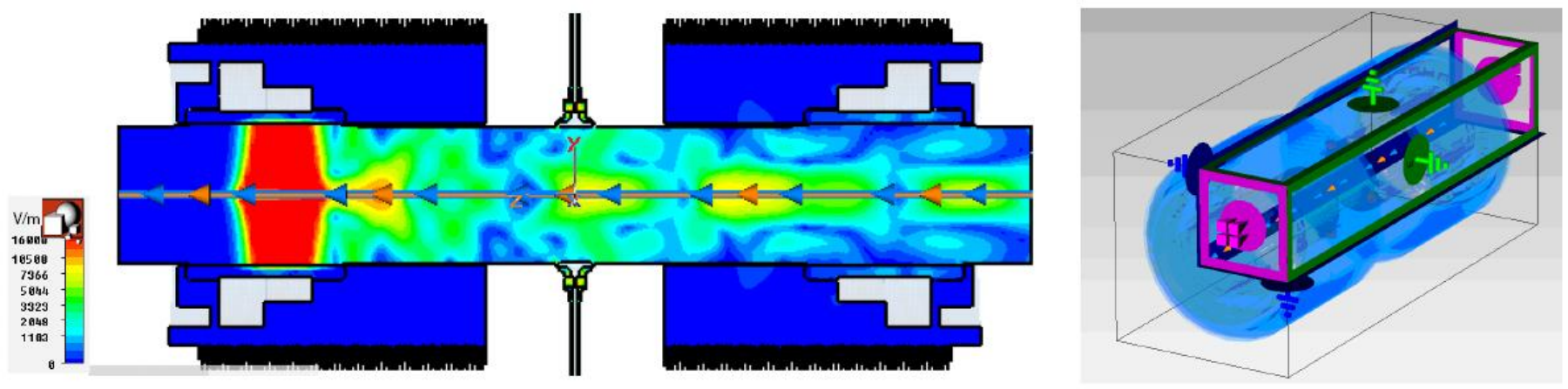

The wake functions of different sections of the beam pipe are now being modelled using CST Particle Studio.

The goal is to determine:

1. the impact on the beam dynamics (bunch length, stability);
2. the power load on each BPM insertion.

Simulation for BPM (above) uses 150 million mesh cells, with (initially) a maximum longitudinal cell size of 0.17 mm.

Impedance Model: New BPM Design

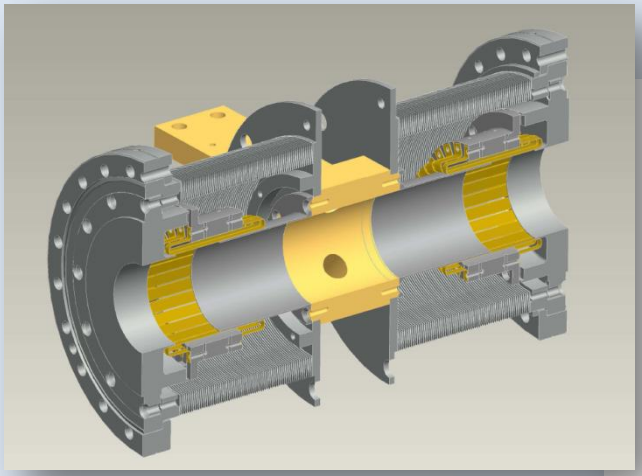

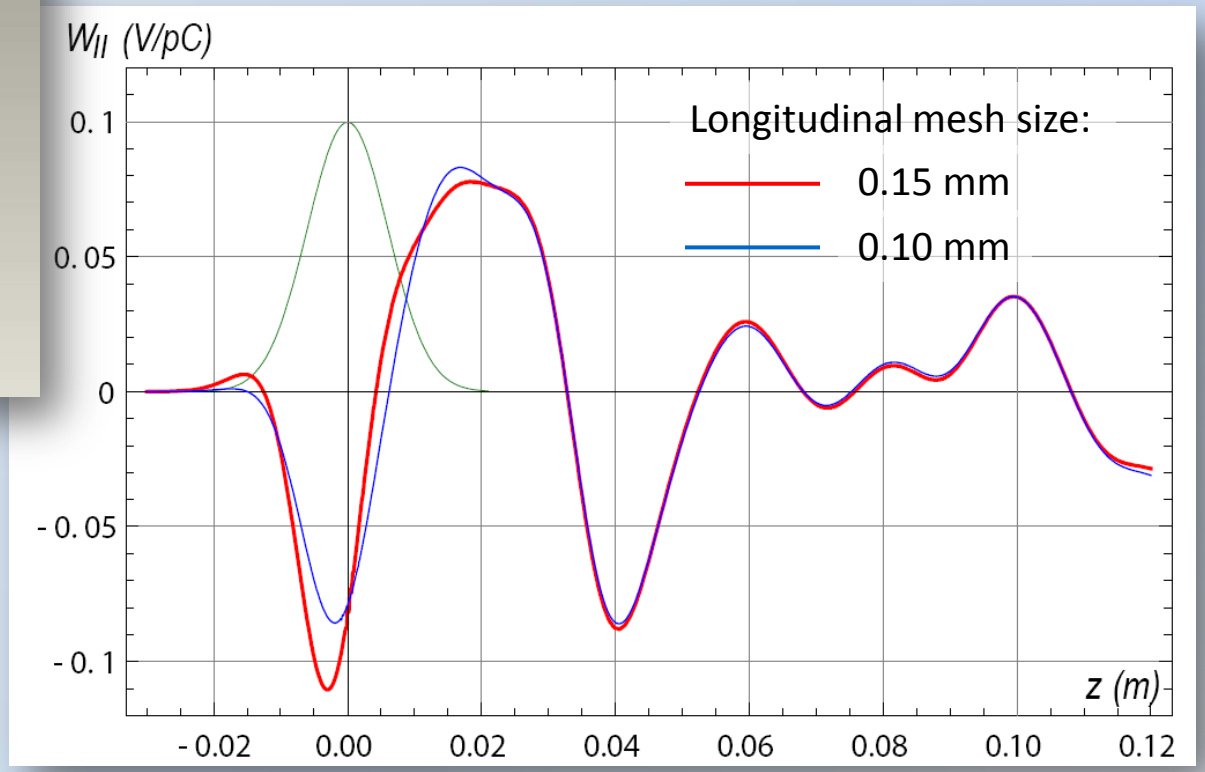

BPM model with rf shield/bellows based on INFN-LNF design.

Loss factor = 0.044 V/pC.

Power load = 54.4 W per BPM insertion.

Longitudinal wake potential is calculated from CST Particle Studio.

A small unphysical “bump” in the wake field appears ahead of the bunch.

This artefact can be reduced by making the longitudinal mesh size smaller.

Bunch Lengthening and Instability Threshold

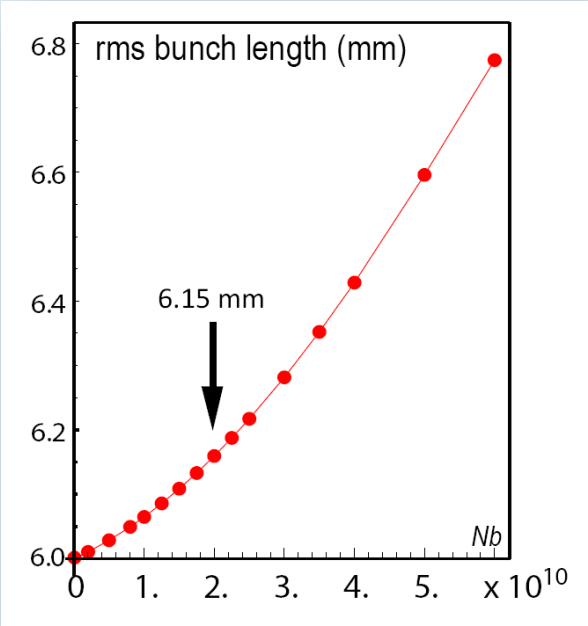

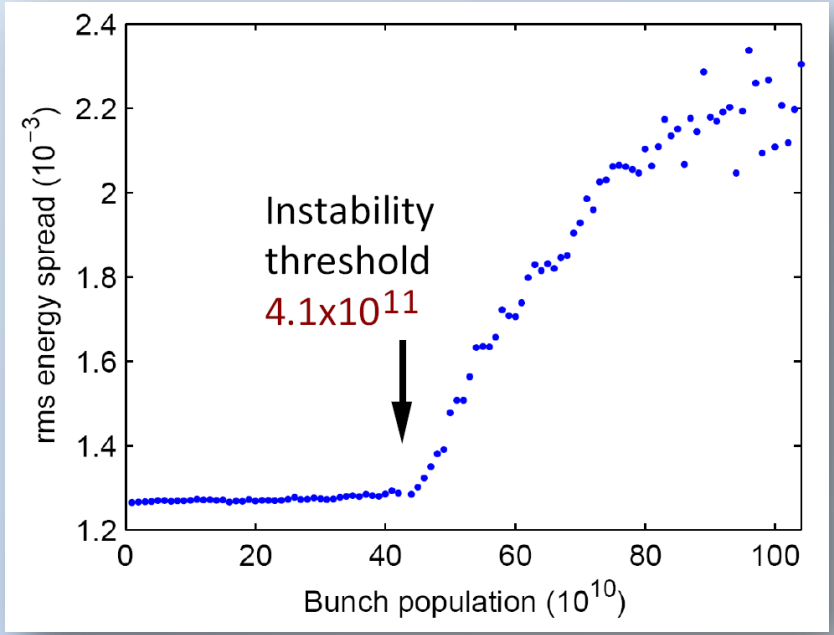

Dynamics with new BPM design and improved (more reliable) impedance computation appear much better.

Note that results above include only the contribution from the BPMs to the impedance: but there appears to be a good margin to allow for other components (photon stops, kickers, tapers…)

Studies on Long-Range Wake Fields

- Transverse bunch-to-bunch jitter at extraction from DRs should be less than 10 % of the transverse beam size to avoid significant luminosity loss.
- During injection/extraction cycle, bunch-to-bunch jitter on the injected bunches can couple to the bunches about to be extracted, through long-range wake fields.
- Assume that vertical jitter of a bunch at injection has a Gaussian distribution.
- Assume that vacuum chamber resistive wall makes a major contribution to the long-range wake fields (and include effects of NEG coating).
- Use newly-developed fast simulation techniques to collect statistical distribution of extraction jitter for different seeds of injection jitter.

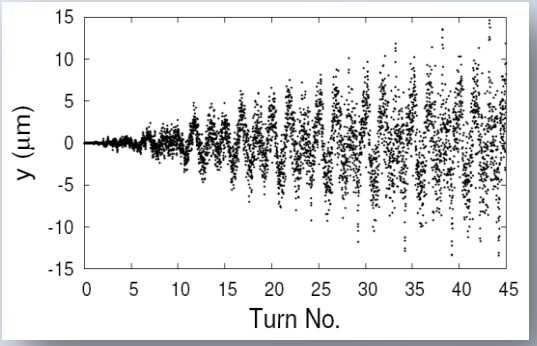

1 mm rms injection jitter: the rms centroid displacement is 50% of the rms beam size (one particular seed of random injection jitter).

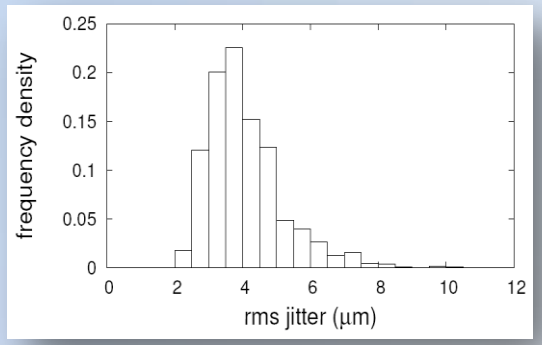

A mean jitter of 63%, and a standard deviation of 18% (for 1000 seeds of random injection jitter)

- The injection jitter should be less than 0.2 mm.
- A feed-forward system in the extraction line may be used to relax the specification.

Low-Emittance Tuning

Studies of coupling correction using orbit response matrix (ORM) analysis have continued at ATF.

Results from a model fitted to ORM data seem in reasonable agreement with direct measurements on the machine (e.g. beta functions).

However, the accuracy from ORM analysis seems insufficient for tuning the emittance to a few picometres.

ORM analysis could also be difficult to apply to a large (6.4 km) storage ring.

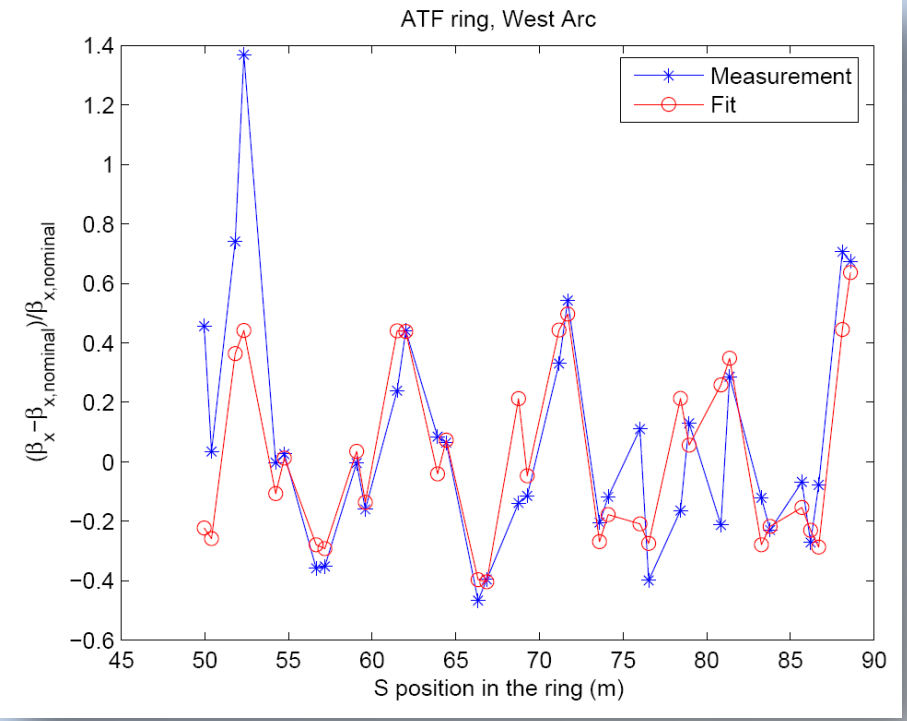

Low-Emittance Tuning

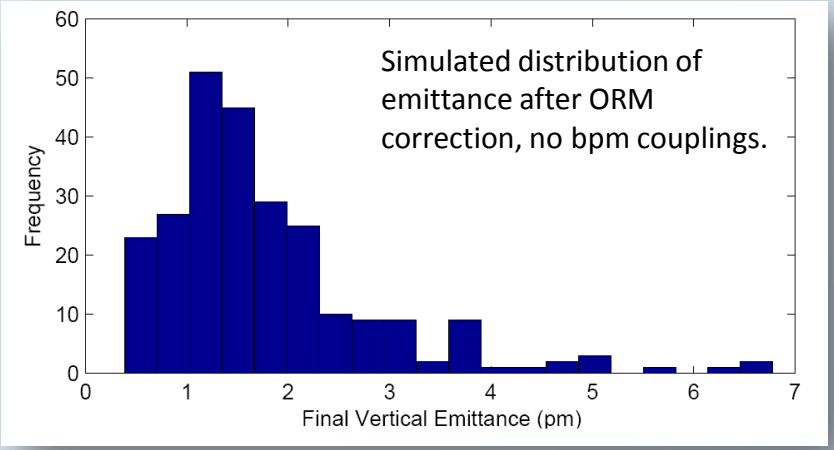

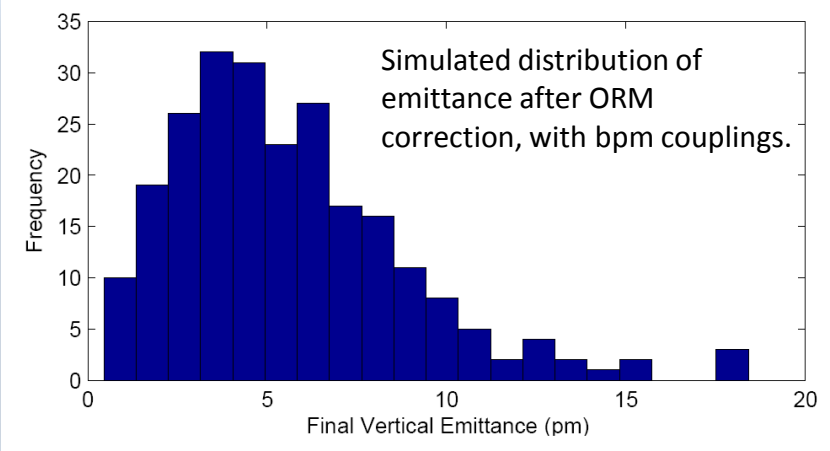

So far, orbit response matrix analysis has not achieved the results we had hoped for.

The reason could be a degeneracy in the ORM data between skew quadrupole strengths and bpm couplings.

K. Panagiotidis and A. Wolski, "Possible limitations in coupling correction using orbit response matrix analysis," proceedings of PAC'09.

Investigating Alternative LET Techniques

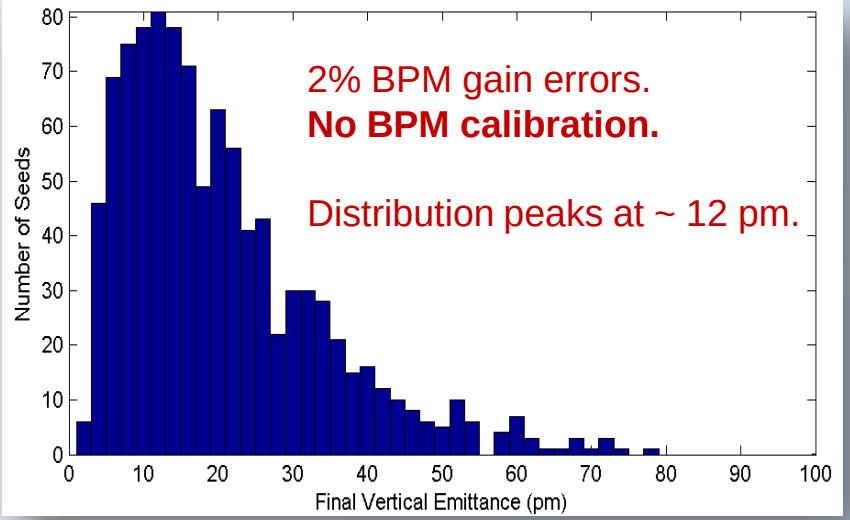

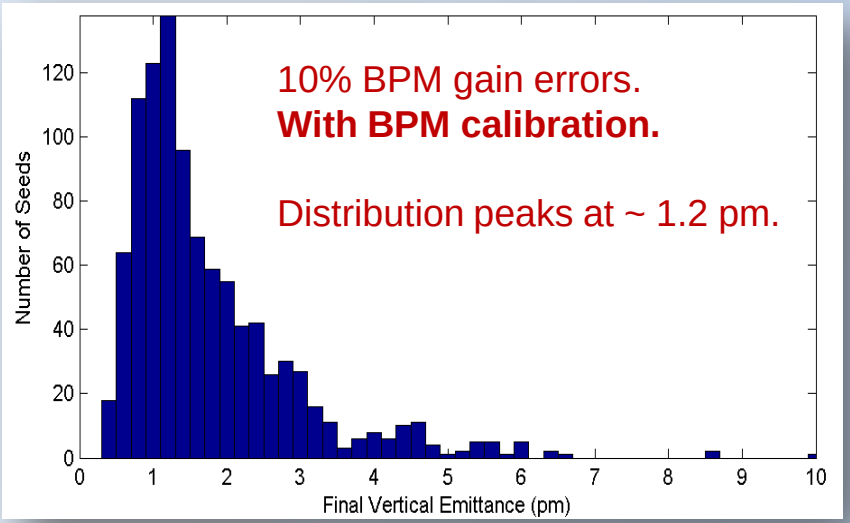

We are developing a technique for BPM calibration based on turn-by-turn data.

The simulation procedure for ATF is as follows:

- apply magnet alignment errors (100 µm rms on all quadrupoles,
  150 µm rms on all sextupoles);
- apply BPM gain errors;
- correct the closed orbit to leave 300 µm rms residual (the residual represents, for example, BPM offsets);
- correct the vertical dispersion using skew quadrupoles, based on the dispersion measured with BPM gain errors.

Orbit and dispersion correction are achieved using response matrices calculated from the ideal model.

Two or three iterations of the dispersion correction are required, with re-calibration after each correction.

The simulation is repeated for 1000 seeds, and we plot the distribution of final vertical emittance...

Summary

Lattice design

- 6.4 km lattice (DCO4) is now complete, and meets known dynamics and engineering specifications.

Vacuum system technical design and costing

- Arc cell technical design is essentially complete.
- Significant work has been done on the technical design for the wiggler sections.
- Evaluation of the performance of the wiggler section design is in progress.

Impedance model

- Work on construction of an impedance model, and understanding the impact on the beam dynamics, is on-going.
- New BPM/bellows design has simpler mechanical assembly, and slightly lower inductive wake field; but resistive wake field (and hence power load) is higher.

Low-emittance tuning

- Limitations on low-emittance tuning at KEK-ATF are now better understood.
- New techniques for determining optics and diagnostics errors, based on analysis of turn-by-turn BPM data, are in development.