ETH Institute for Particle Physics

General Detector Motion System Issues (Push-Pull @ ILC)

A. Hervé / ETH-Zürich

IWLC2010 – 19 Oct. 2010

Reminder

- The push-pull project is a very ambitious one.

- In size of loads to be moved > 10’000 tons, number of movements > 150 over 15 years.

- It is even more demanding when considering the environment, final precision, and time constraints, say a full exchange in less than three or four days.

- This is a very challenging task, and there is no example of such a system.

Introduction - I

- The chosen system must be reliable and easily repairable to cope with *difficult local conditions that will necessarily deteriorate with time.*

- Because the push-pull requirement was introduced during the LoI process, two different solutions have been chosen by ILD and SiD.

- These solutions are not compatible and this situation is impairing the good progress of civil engineering studies and definition of facilities.

Introduction - II

- There has been an effort at SLAC in 2009, together with M. Oriunno (SLAC) and K. Sinram (DESY), to try harmonize the two solutions.

- It should not be really a surprise that, at the end, it was concluded that either:
    - ILD and Sid do not use a platform,

    or
    - both ILD and SiD use a platform.

Both detectors on a platform

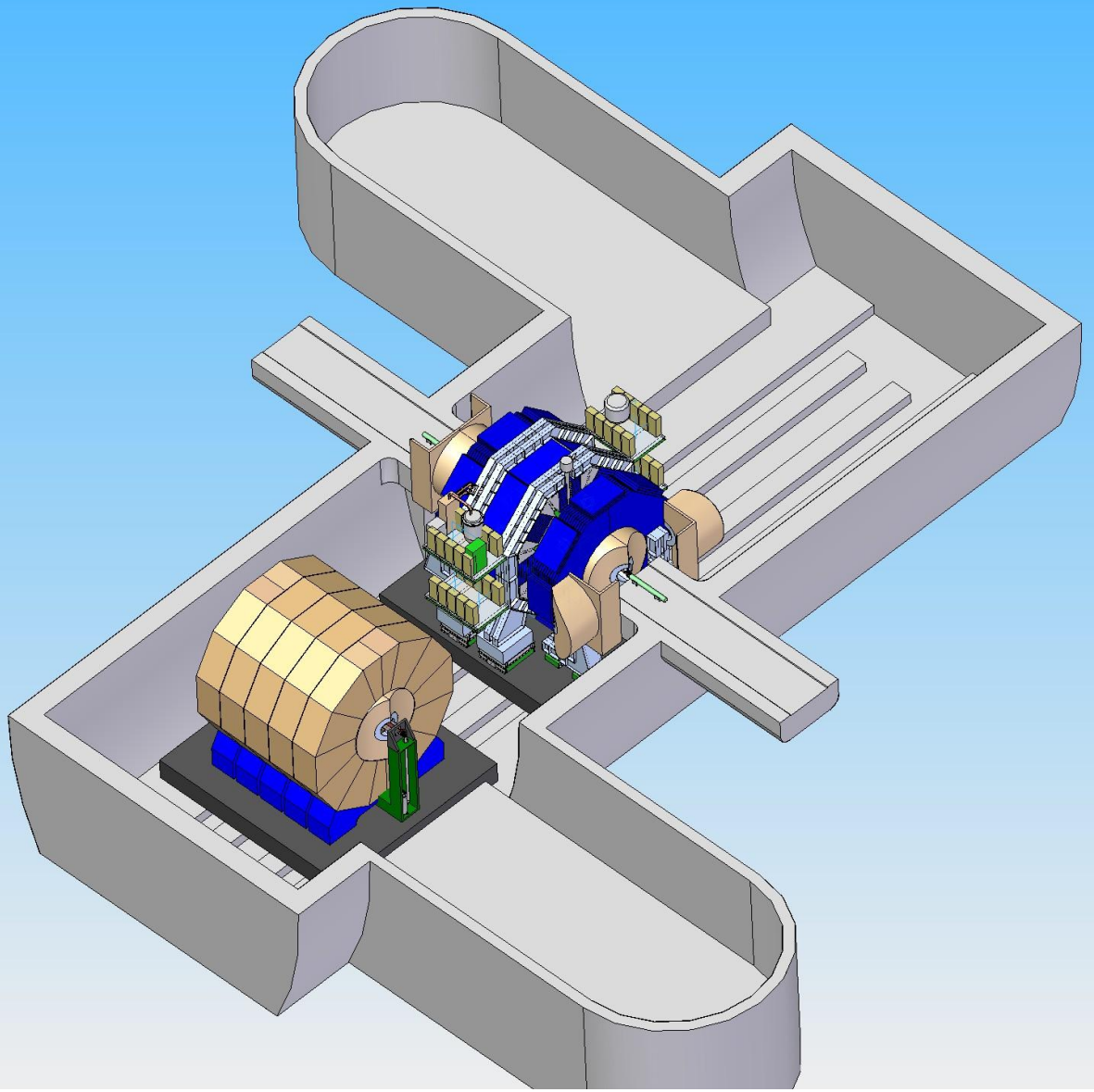

(M. Oriunno)

No detector on a platform
(*it looks at first like the simplest solution*)

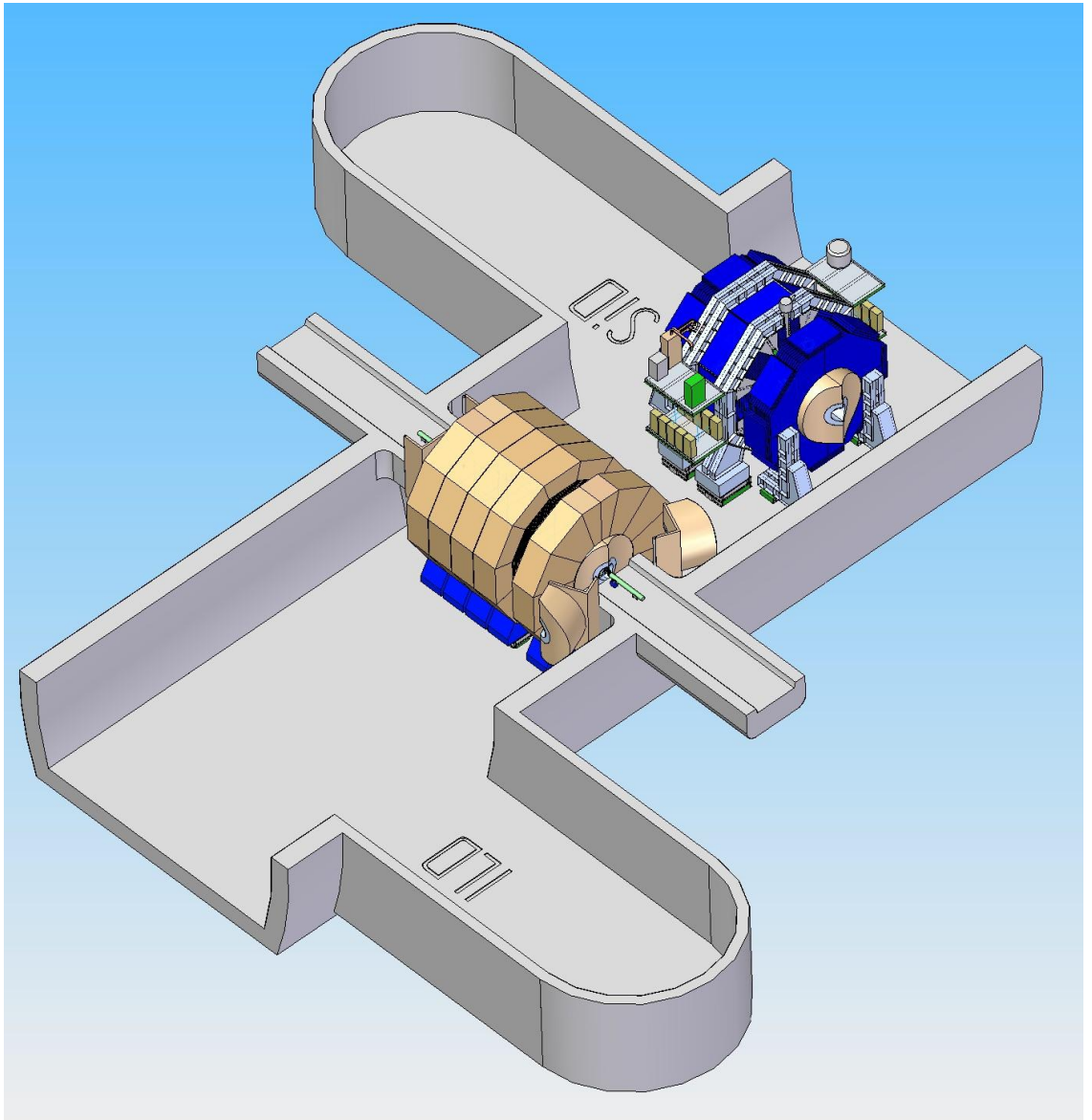

(M. Oriunno)

ILD without a platform?

- To move ILD without a platform, and without a full redesign, looks very difficult.

- In fact ILD looks very much like CMS, and I do not see how CMS could be easily moved in one element respecting all conditions for safety, precision and time.

- Uwe Schneekloth will bring more information on the subject, *ILD Push-Pull Plans*, in one of the following talk.

Both with a platform?

- In what follows I would like to show that the use of a platform could bring added advantages because it neatly separate the push-pull system from the experiment proper.

Platform cost

- The problem of cost has been mentioned as a possible drawback.
- Indeed, using CMS plug as an example, the cost of each naked platform has been estimated, together with J. Osborne, to 1 MCHF (≠ 1M$).
- However this has to be balanced against other hidden costs that I will mentioned later (like piling) and clearly against risks.

Roller / Airpad consideration

- The flatness of the rail under the load maybe a problem.
- Airpads are very tolerant with respect to the rail geometry and do not need a hardened rail.
- At the contrary, a figure of a few tenths of mm has been mentioned for the allowed deformation of the hardened rail under the full area of a loaded Roller to ensure that most rolls are loaded.
- I think that, if rollers are used, additional piling has to be foreseen below the underground hall to guarantee the rail flatness.

Example: Execution of piling for SX5 to support CMS

Roller / Airpad consideration

- Thus if rollers are used, additional piling has to be foreseen.
- This is site dependent, and my estimation is ≈ 2MCHF (≠ 2M$). But this must be looked at in more details by Civil Engineering.
- One can further argue that, even if a good geometry is obtained this way, it is likely to be degraded with time by rock and concrete movements, leading to a possible failure of the push-pull system after few years.
- In addition repairs are very difficult because the hardened rail that cannot be welded or ground.

Platform/ Airpad consideration

- In fact, the platform solution shows all its advantages when used in conjunction with airpads, because:
  - It allows an easy repair of the rail / support system, removing the high risk component.
  - It allows a fast and safe positioning of the experiment on beam.

Load will arrive off-center and off-axis

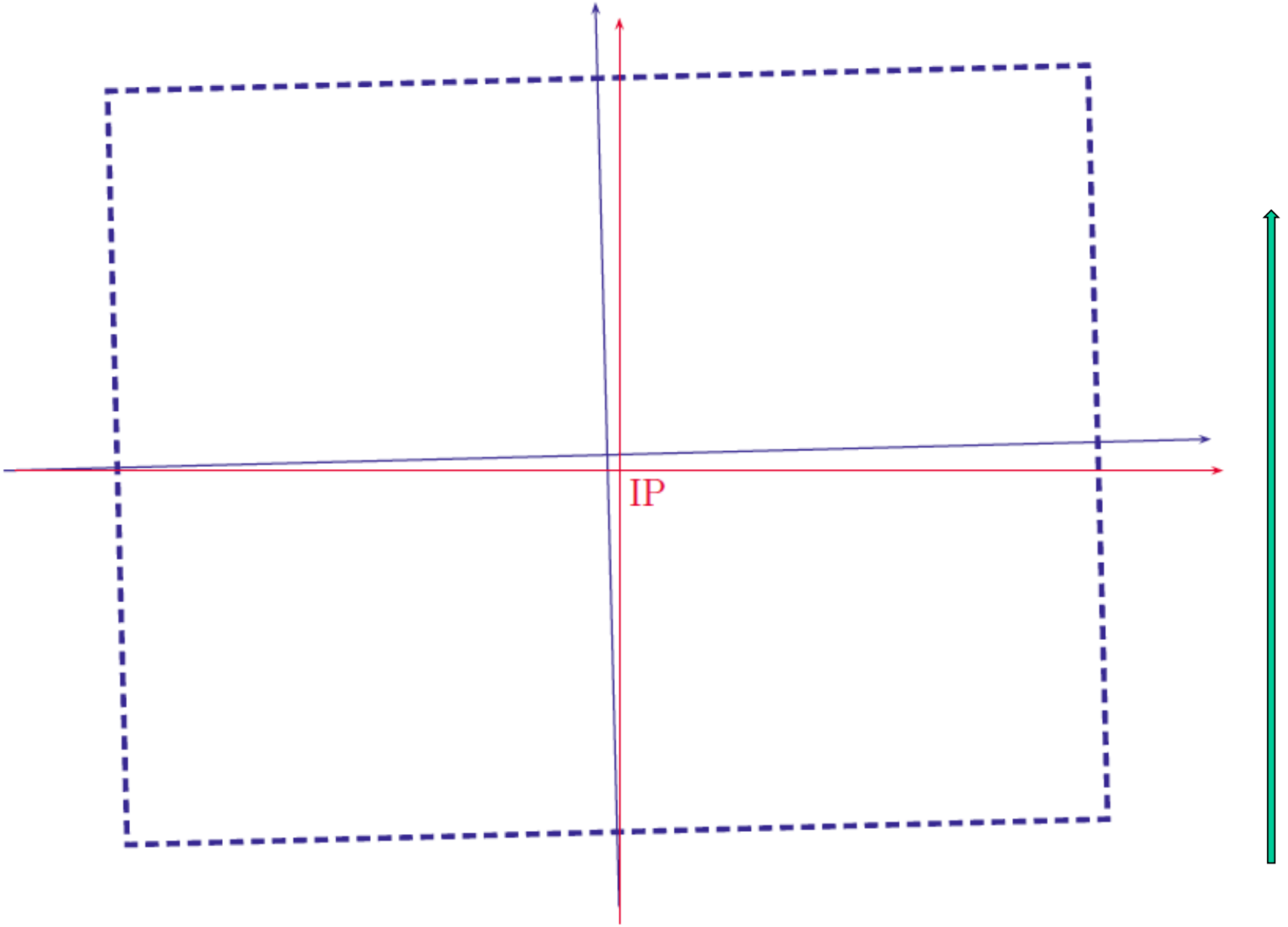

2D movement and a rotation are needed this is very difficult with rollers

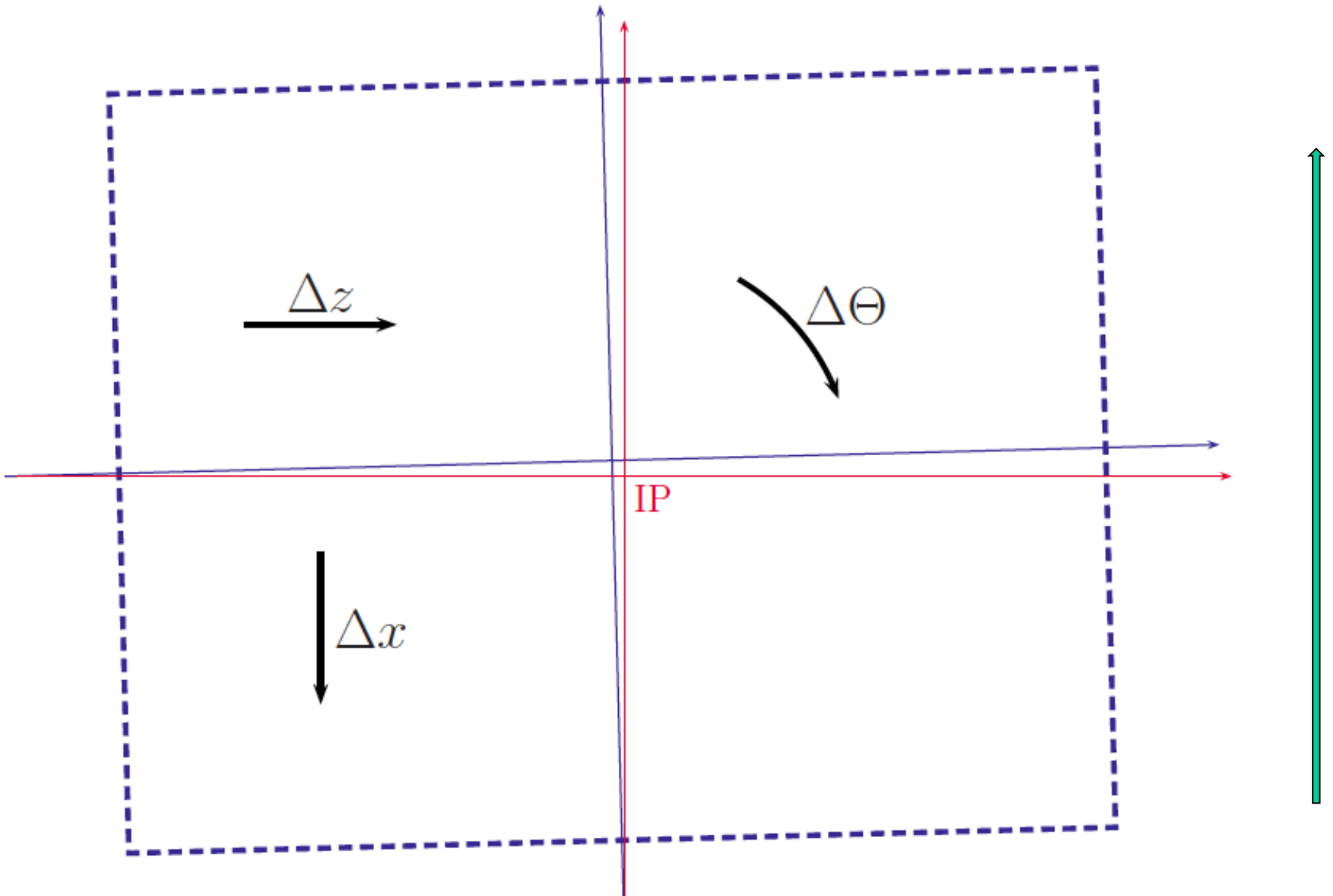

With Airpads a simple positive indexing mechanism is possible giving ≈mm precision

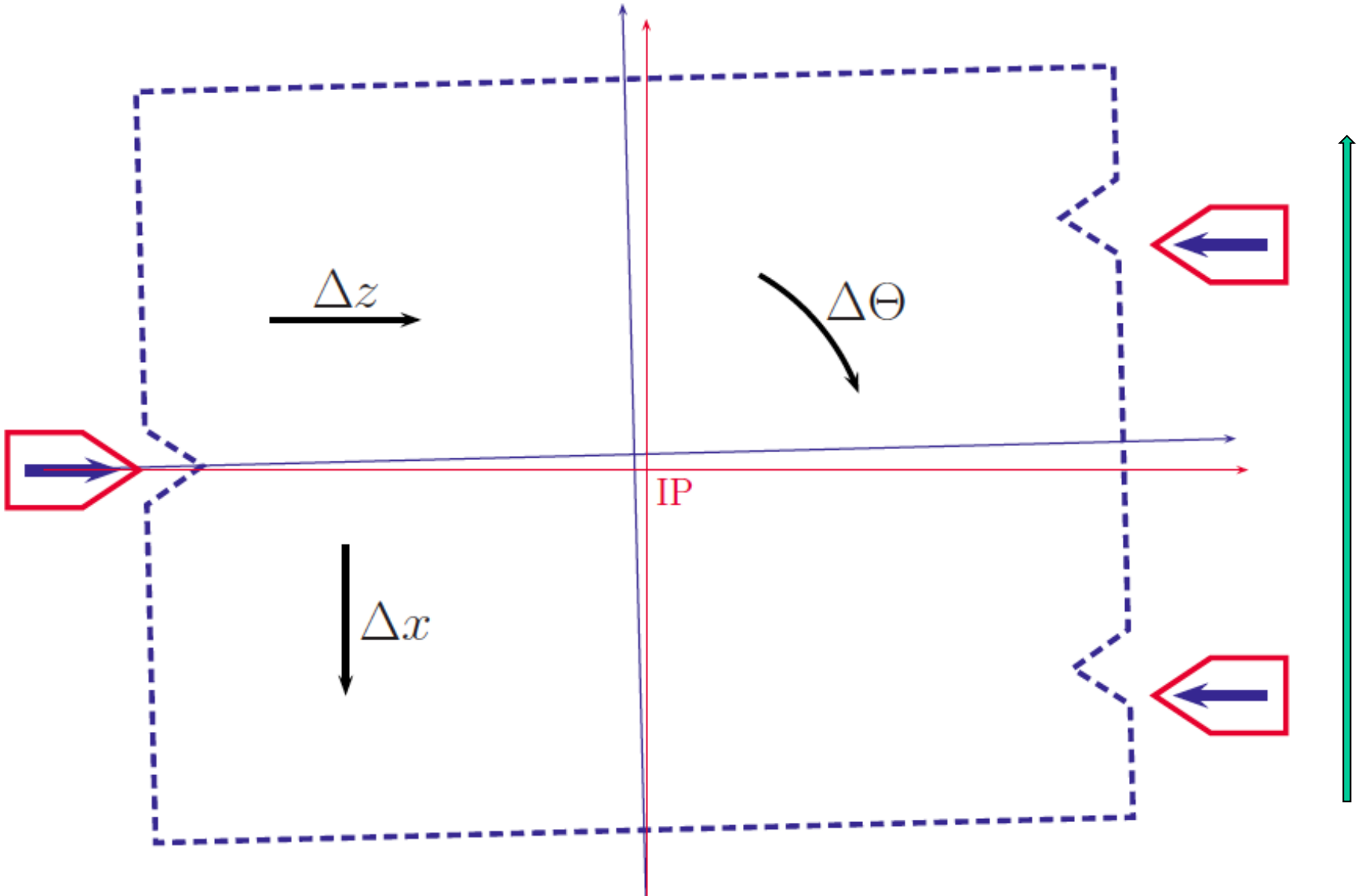

The final precision could be +-1 mm and +-0.1 mrad.

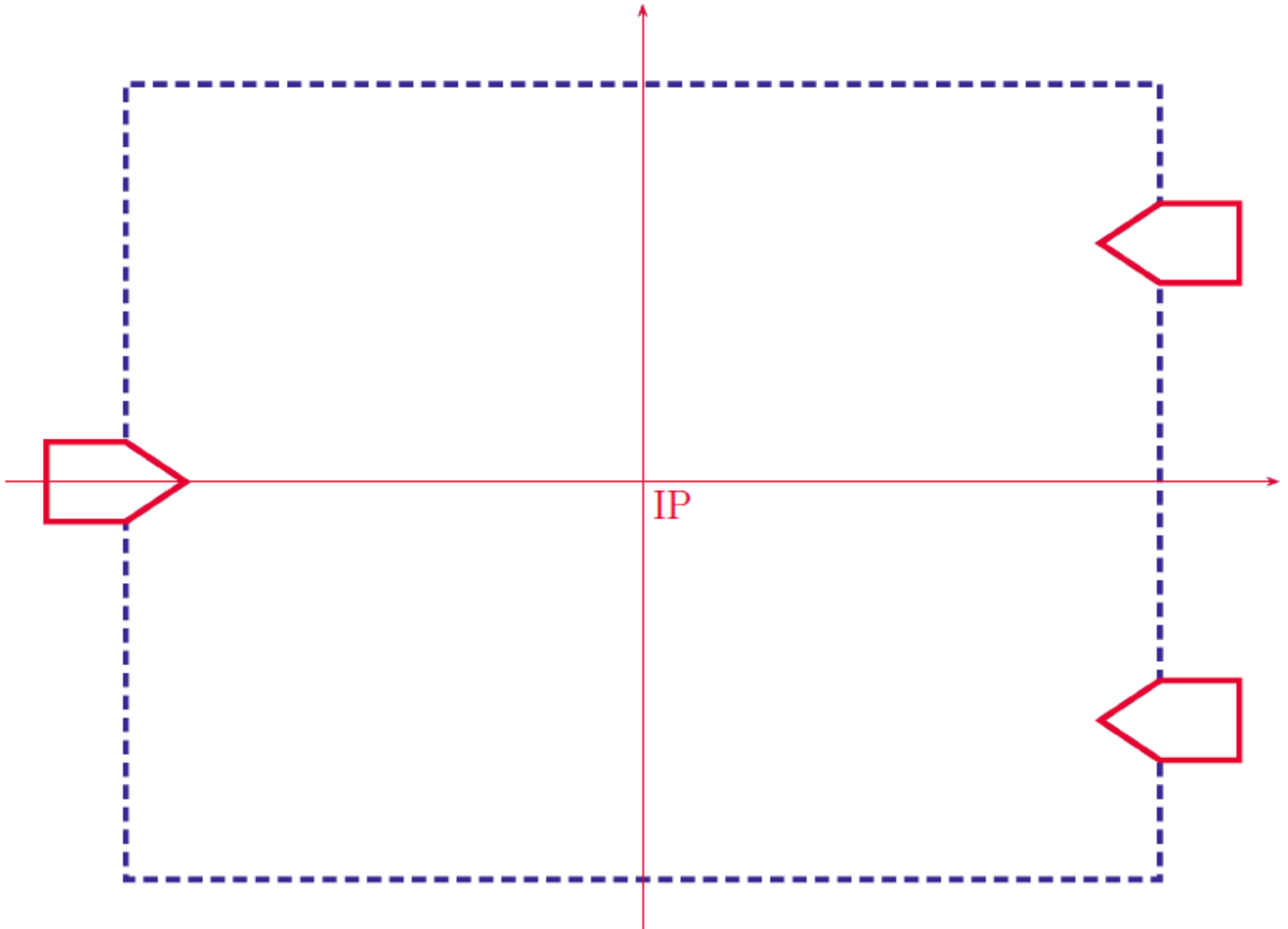

Vibration consideration

- The use of a platform must not be detrimental to SiD that has chosen to support the QD0s from the endcaps.
- At ILC, because the active Feed Back system developed at JAI is very efficient, the needed stability is around 50nm, and first measurements in the CMS area have shown that this is possible.

Vibration consideration at CMS

Vibrations on top of CMS central barrel YB0 with 'Quiet experimental area'

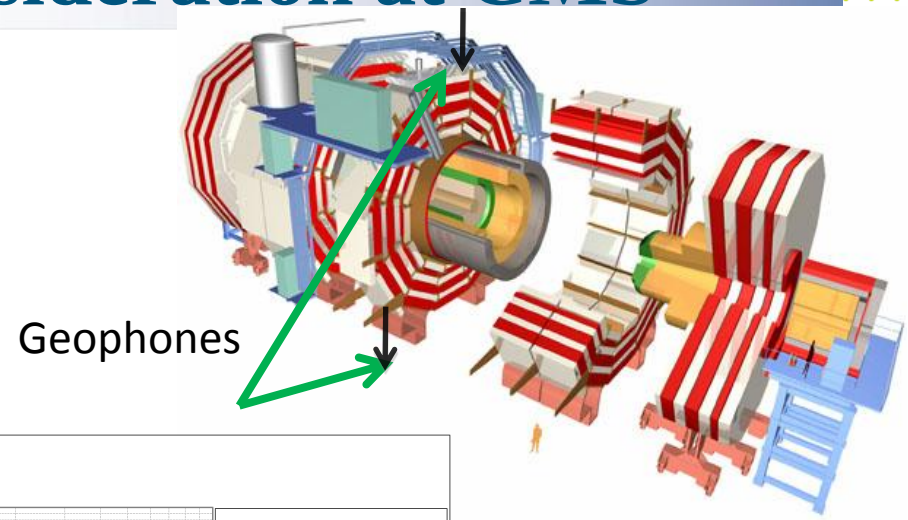

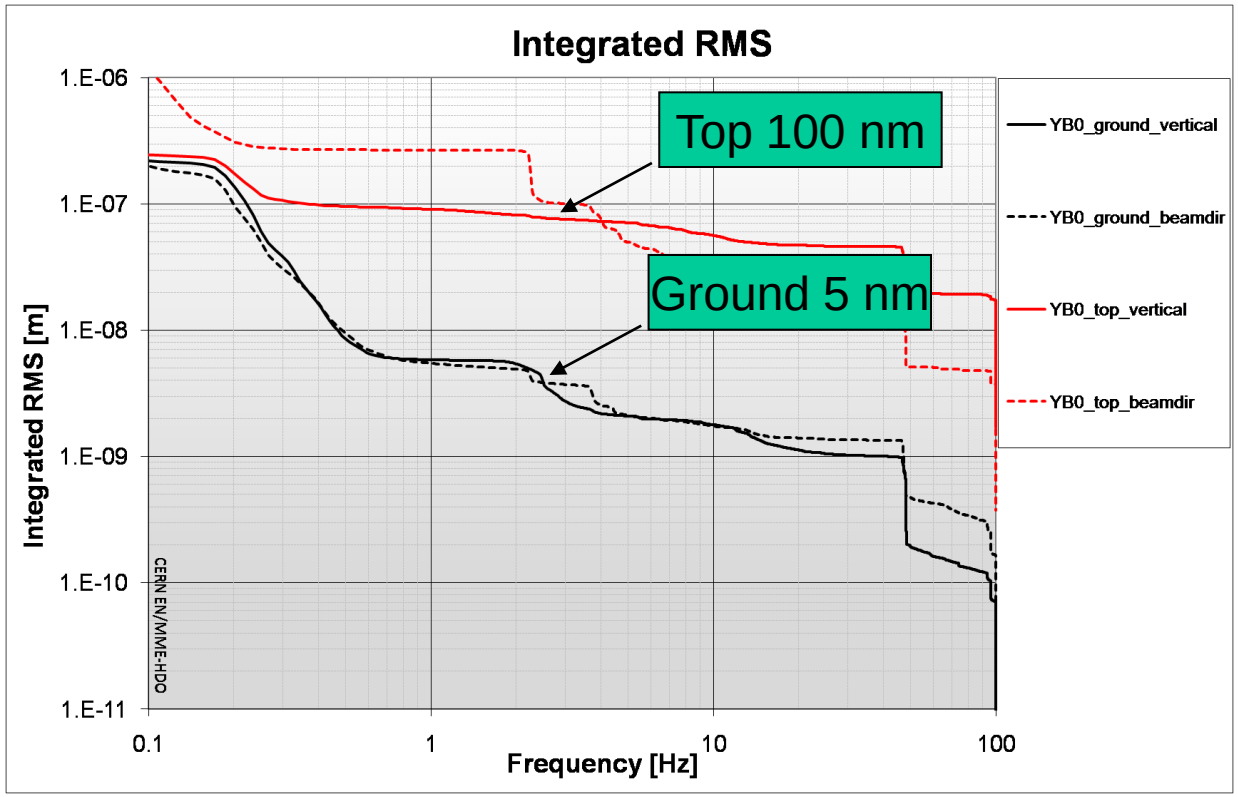

Measurements at KEK on BELLE (Hiroshi Yamaoka) have also shown a degradation of performances when moving up along the yoke.

Vibration consideration

•As the position of the supports below the platform can be optimized with respect to the load distribution of the experiment above the platform, in the end, the situation should be acceptable.

The load distribution can be optimized

Weight distribution of a typical experiment

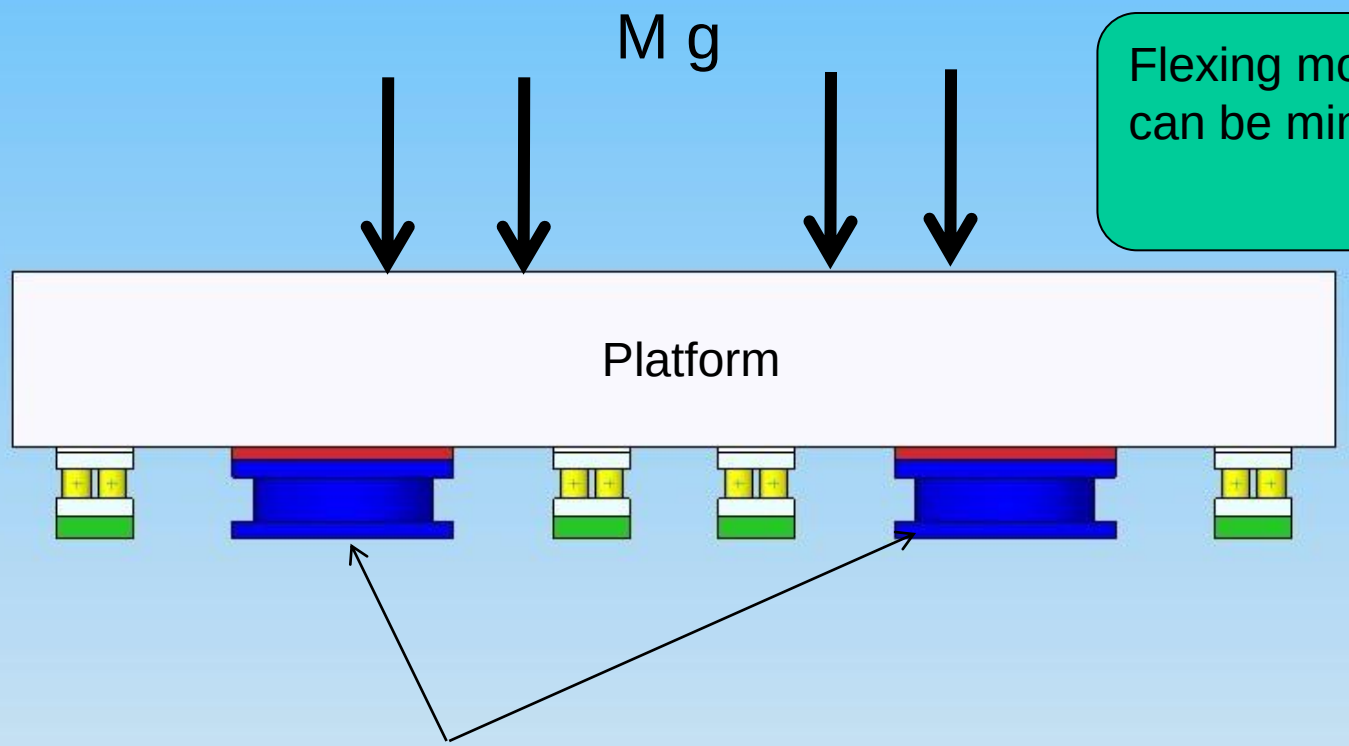

Flexing moments can be minimized!

Supports with adjusted elastic constant

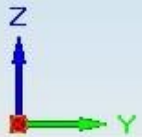

Vibration consideration

- The priority is to develop credible simulation tools, and Marco will keep us informed in the next talk, *ILD Push-Pull Plans*, of what he is doing on the subject.

Vibration consideration

- The CMS plug is a good example of what can be a platform.
- It can be used to allow benchmarking of the simulation programs.
- First measurements have been carried out end of 2009 by Guinchard et al.
- Last week a new measurement campaign has been performed (K. Artoos, M. Guinchard et al.) at the request of SiD.

Steel reinforcement of CMS Plug ⇒ Models need benchmarking to evaluate damping and Young's modulus

CMS Plug finished

Vibration consideration

- The study of the CMS plug is a good example of work that is in interest of both ILC and CLIC
- (Because H. Gerwig for CLIC has directly engaged on using two platforms for the push-pull operation.)
- Thus vibrations measurements, on and around the CMS plug, could be a good item to be added to the agreed list of items of the ILC / CLIC collaboration.

Conclusions

Conclusions-I

- The push-pull operation to quickly exchange two detectors on IP is an important feature of any LC.
- To be efficient this operation has to be carried out in less than three or four days including precise realignment on beam.
- This is a very challenging and difficult task as this system cannot fail even if local conditions worsen with time.
- The risk of finishing after some years with a non-functioning system must be avoided at all cost.

Conclusions-II

- SiD and ILD have chosen two different solutions that today look incompatible.
- The only solution that seems to satisfy all needs is to have one platform for each detector.
- Clearly the choice of a platform must not jeopardize the QD0 stability in SiD, that support them from the endcaps.
- The CMS plug is a good example of a platform and its vibration performance could be used to benchmark the simulation programs developed at SLAC.

Conclusions-III

- In fact, if a platform solution is adopted by ILC, there would be a complete synergy for the complete Push-Pull project with the CLIC studies.

- The measurement of the vibration performances of the CMS plug is also in the interest of CLIC, that has chosen to use platforms, thus it would be proper to introduce (at least this item) in the list of subjects of the ILC/CLIC collaboration.