Low Energy 10Hz Operation in DRFS

S. Fukuda
KEK

Review: DRFS Plan for derivative option

- HLRF of DRFS comprises of many small klystrons

  Basic scheme : 800-850kW from DRFS Klystron
  » 65-67kV applied voltage
  » pulse width of 1.56ms, 5 Hz repetition

– Cavity gradient acceptance:

  (31.5MV/m+-20% or 25-38MV/m)
  Cavity gradient sorting results in 105% cost up

- Reduced bunch operation

– DRFS prefers to the beam current of 4.5mA and from above condition, the pulse width is longer to 2.3 ms.
– Another requirement:

Low energy 10Hz operation: 150GeV + 125GeV acceleration

Low-energy 10 Hz Option Scenario-1

- All DRFS klystrons are operated in about half rating of 400kW.
  - How to recover the efficiency since expected efficiency is around 40% due to the quite different operation from design value.
  - Even though klystron efficiency is same as original, max. rep. rates are 8.3Hz since 150GeV acceleration is required.

Availability Consideration Revised(100920-Tsukuba)

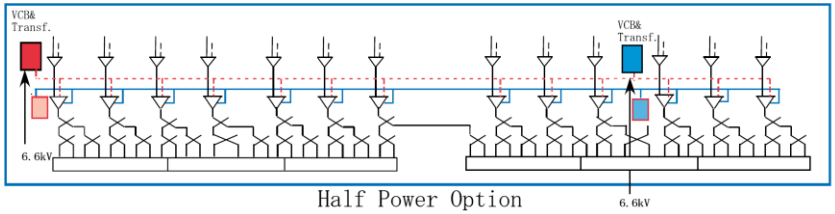

For 150 GeV, factor of 20% is multiplied.

Current	4.5	mA		
Electric Field	15.75	MV/m		
Length	1.0377	m		
Power Required			73.5	kW
4 cavities total	4		294.2	kW
Margin or overhead	20	%	353.0	kW
RF eff	100.000	%	353.0	kW

Total ML RF Unit		3640
1 DRFS Unit Energy Gain	GeV	0.065
e- source	GeV	5
e- RTML	GeV	6.5
e- Cav. No		7332
e- ML RF Unit		1833
e- Energy	GeV	131.3
e- Overhead	%	5.1
e+ source	GeV	5
e+ RTML	GeV	6.5
e+ Cav. No		7228
e+ ML RF Unit		1807
e+Energy	GeV	129.6
e- Overhead	%	3.7

High efficiency operation in lower voltage for low-energy 10Hz operation (scenario-1)

Operation Point Shift

Klystron voltage
64kV-> 59kV
Klystron micro-Perveance
1.2 -> 0.8
Klystron efficiency
62%->60%
External Q
Relative Q : 1 ->2.2

These are realized by tapping off V_{KM} /V_{KA} and loading the iris in PDS.

DRFS required the system revision to eliminate the loaded iris.
Tap-off ---cost up

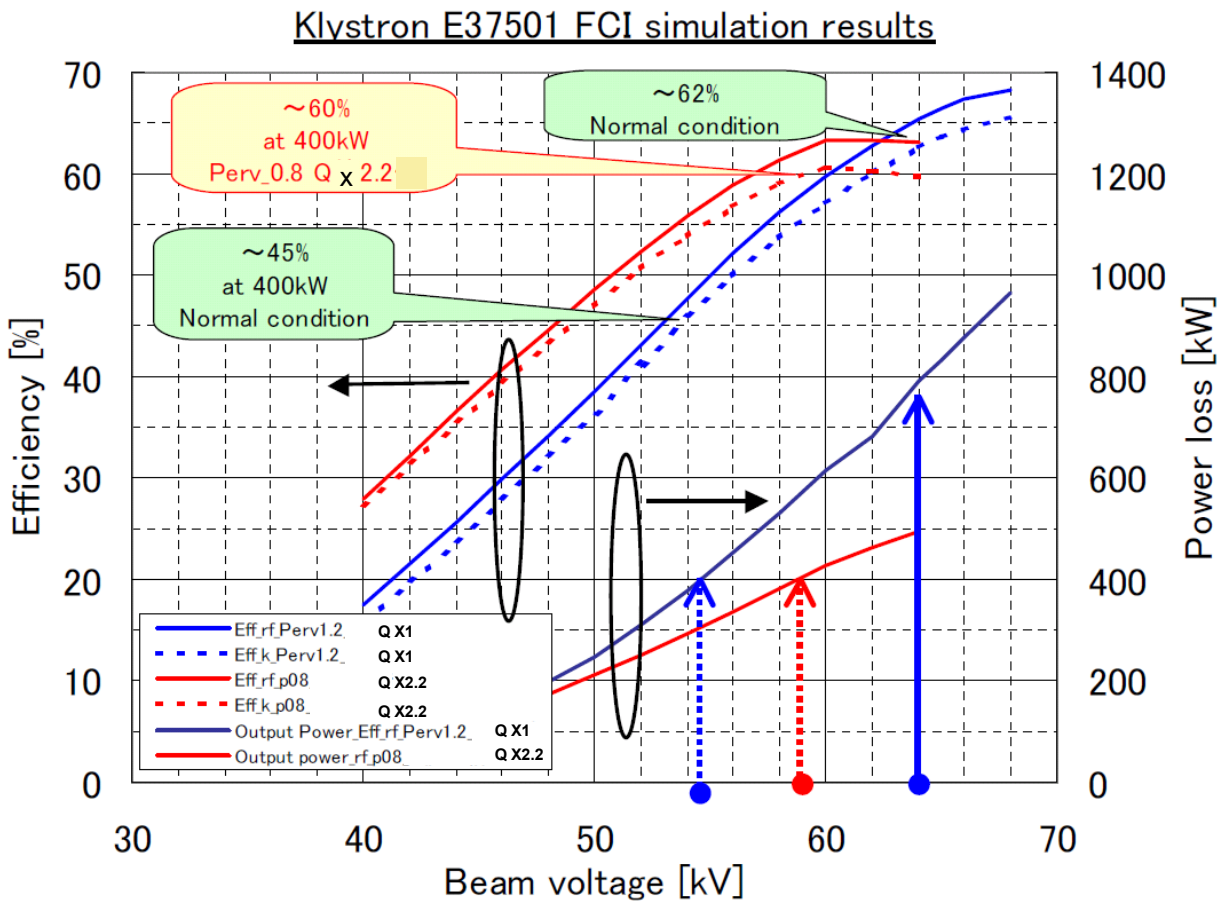

Hardware revision from LE 10 Hz to Red. Bunch Option

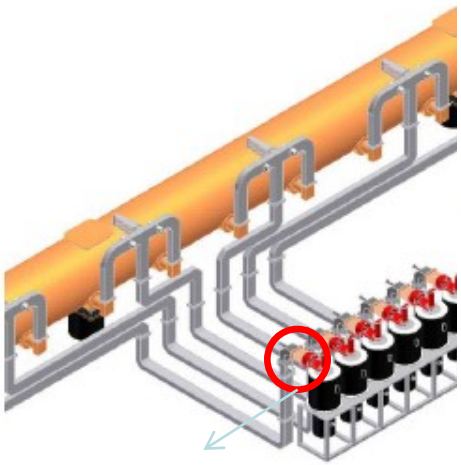

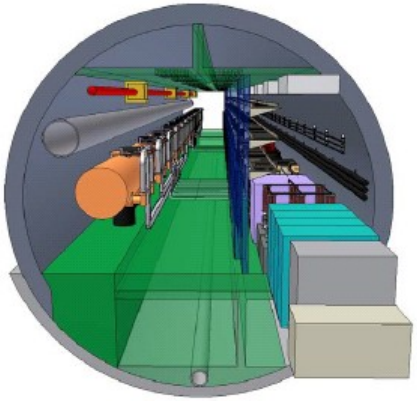

Tap-off work of MA mod.5min. Work.

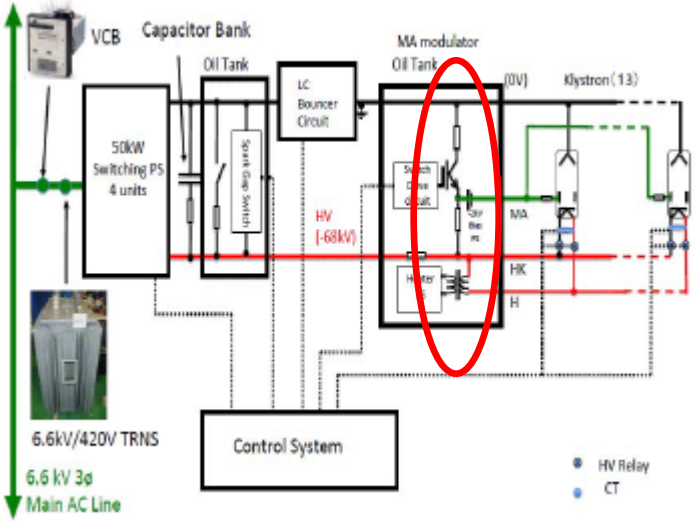

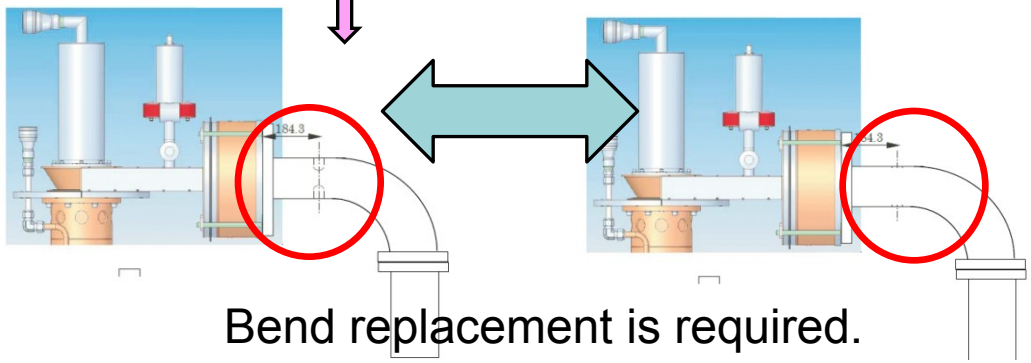

Bend replacement is required.
15 min, work/person/kly.

For transition from 10Hz option
To reduced bunch operation, 1833
Klystrons and 141 MA modulators
Are revised.
About a week's work.

ILC Construction/Operation Scheme and DRFS (revised)

Revised schedule scheme and base of the presentation for BAW-2 based on the High efficiency operation of klystron in lower voltage

Step	Status	Mode	Center of Mass Energy	Current	Electron		Pos		Beam
					Energy	Rep			
			(GeV)	(mA)	(GeV)	(Hz)			
0?	Operation	Low Energy Option	250	4.5	125				0.25
0-0	Upgrade								
0-1	Operation	Low Energy Option 10 Hz	250			5	125	5	0.5
					ration Mode to SB2009				
0-2	Operation	300GeV			150	5	150	5	.3
0-3									
1-0	Up								
1-1		gy SB2009	500	4.5	250	5	250	5	0.5
2-0		4000 RF Source are installed							
2-1		RDR	500	9	250	5	250	5	1

Frequent energy change from Low-energy 10Hz to 300-350 GeV Operation might be expected and interruption of hardware change is not welcomed.

Scenerio-2
Revised Low-energy 10 Hz Operation in DRFS

- In order to eliminate the system modification term, new scheme for low energy 10 Hz operation is proposed.
- Though using the same configuration as SB2009 (1 DRFS Klystron feeds a 800kW power to 4 cavities), about the half klystrons run actively and others don't contribute to the acceleration by separated by utilizing HV relay of DRFS klystron. So active cavities field gradient is near to the 31.5 MV/m. Non active cavities are detuned completely not to disturb beam acceleration.

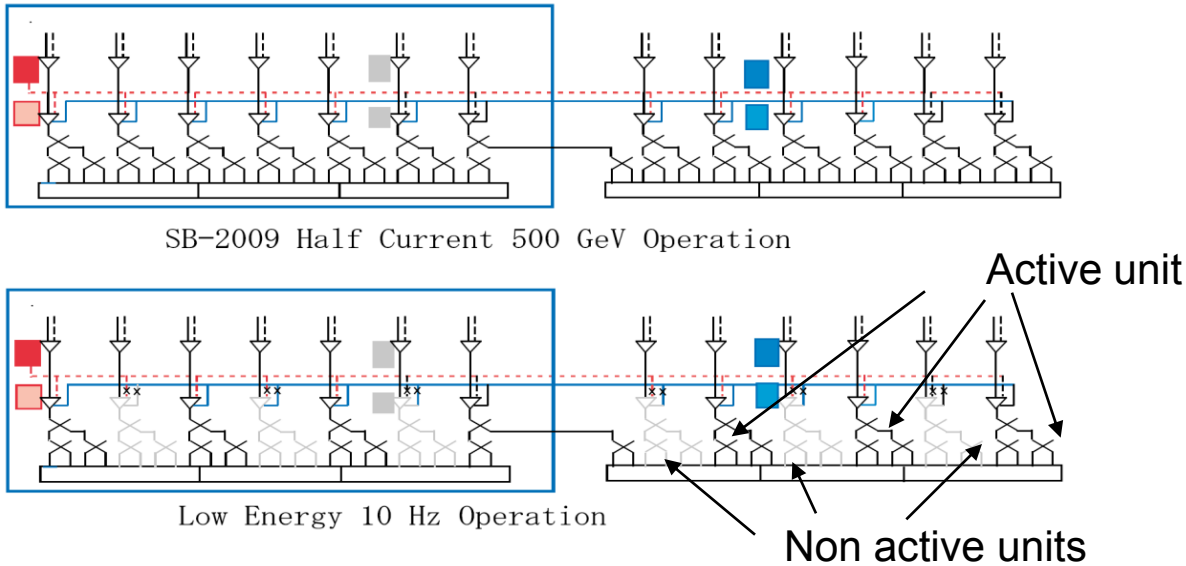

Revised Low-energy 10 Hz Operation in DRFS

- Klystron's operation mode is the same as the SB2009 (or full voltage mode) therefore there is no efficiency drop. And ILC operation from 250-GeV 10 Hz to 300 GeV 5 Hz operation, there is no hardware modification. Changing the number of active klystron achieves the energy.

- In order to achieve a high positron yield rate, half pulses are used for 150 GeV acceleration, while other half pulses are used for 125 GeV acceleration. In this scheme, lower acceleration than 125 GeV is easy during the 150 GeV acceleration, since LLRF just changes the driving point of klystron input power more deeply (10 Hz operation).

- LLRF change the operation point of klystron pulse by pulse and 5 pulse for 150 GeV and another 5 Hz for 125 GeV.

Technical Points to Achieve the Proposal

- For the klystron selection, after lowering high voltage and switch on/off of HV relay. It doesn't take long time (less than a few 10 minutes). The reliability of high voltage relay become more important and we should pay attention to this development.

  Reliability tests and some redundancy ways are considered. Two-serial-switches connection is one of the ways.
- Pulse to pulse control of the klystron drive power is required and we should establish this method. Basically this function has already been included.
- Effects come from fluctuation of heat loss (variation of Po from klystron and cryomodule load variation) should be well investigated.

Pulse Structure (250GeV)

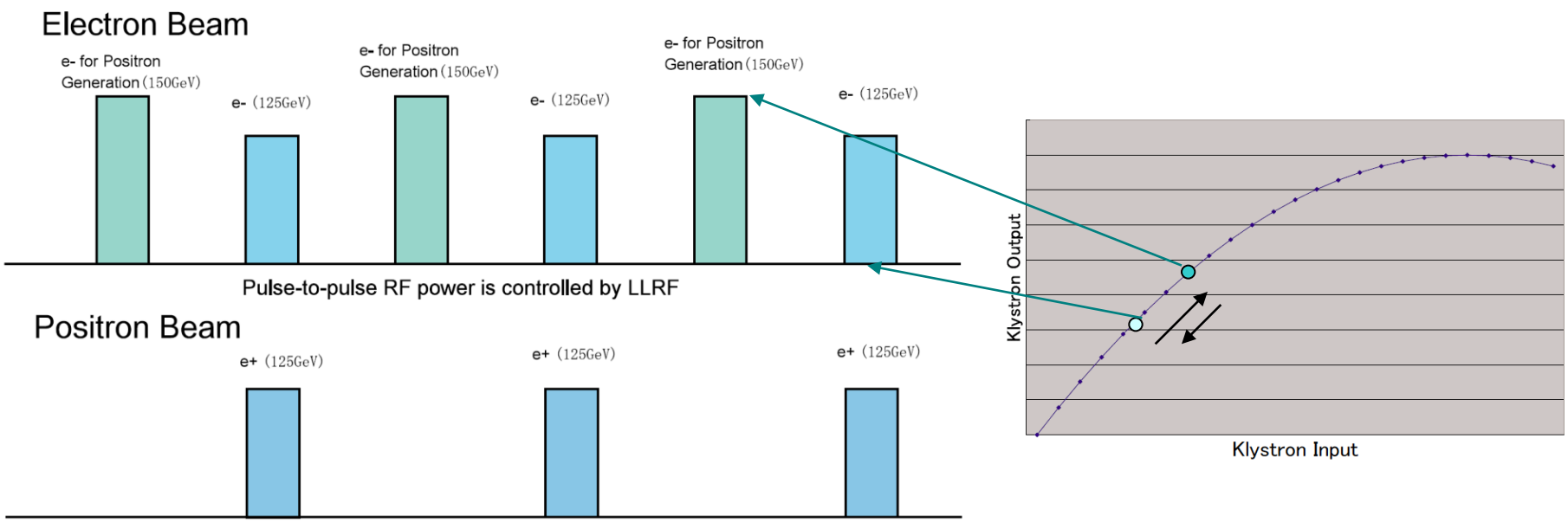

Pulse Structure (Lower than 250GeV)

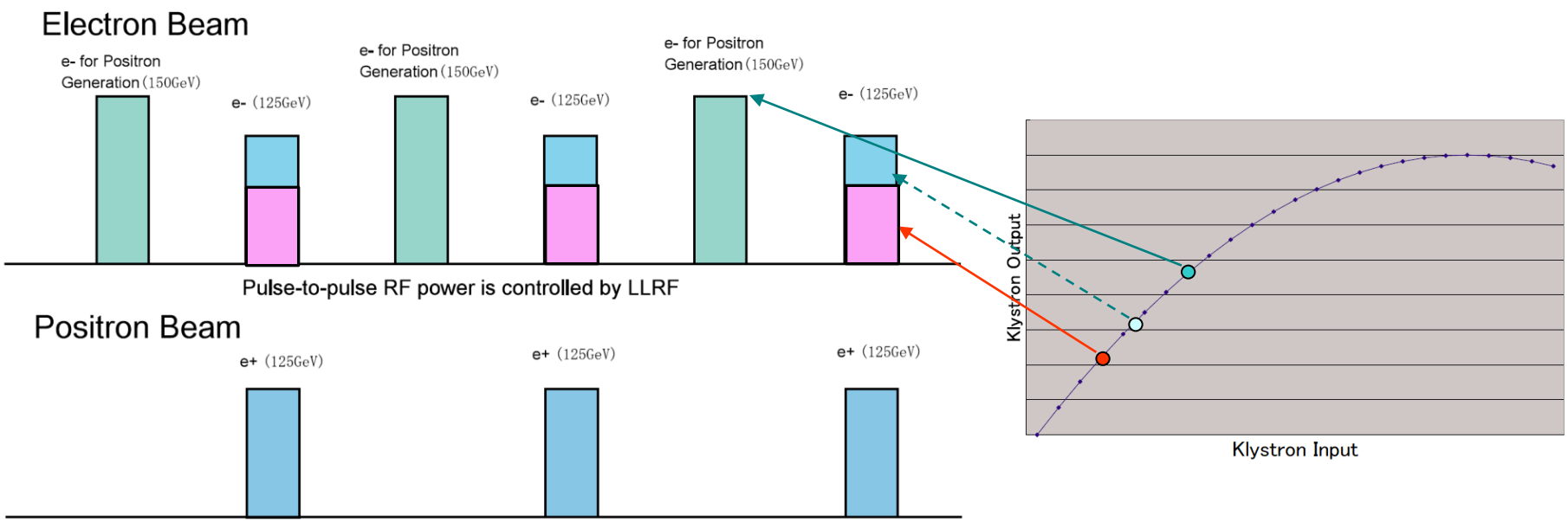

Usually maximum rep. rate is 8.3 Hz

Sorting Bin	Sorting Range	Lowest % of Bin	Lowest E(MV/m)	Kly Pout(kW) with 20% Margin	Pulse Width	Capacity of PS	Pout AV(kW)	Min. Acc Gain(MV)	Uniform Kly Distribution	SB2009 Energy Gain/Bin	SB2009 Kly Av. Power	LC・10Hz(150 GeV Op.)Kly Disri.	LC・10Hz Kly Av. Power (150GeV Acc)	Possible Rep. No. for Bin	10Hz Energy
		%	MV/m	kW	ms	kw/Bin/kly	kw/Bin/kly	MeV/Bin/kly	# Unit	MeV/Bin/Kly	kw/Bin/kly	Unit/SB09	kw/Bin/kly	Hz	MeV/Bin/kl
										SB2009			Low Current 10Hz 150GeV		
A	120-112%	112	36.8	799.66	2.30	15.33	15.33	38.14	1.0	38.1	15.33	0.60	9.2	8.3	22.9
B	112-104%	104	34.1	768.34	2.25	14.40	14.40	35.41	1.0	35.4	14.40	0.60	8.6	8.3	21.2
C	104-96%	96	31.5	709.58	2.18	12.89	12.89	32.69	1.0	32.7	12.89	0.60	7.7	8.3	19.6
D	96-88%	88	28.9	653.16	2.11	11.47	11.47	29.96	1.0	30.0	11.47	0.60	6.9	8.3	18.0
E	88-80%	80	26.3	599.07	2.03	10.15	10.15	27.24	1.0	27.2	10.15	0.60	6.1	8.3	16.3
Average		96	31.5	705.96		12.85	12.85	32.69	1.0	32.7	12.85	0.60	7.71		19.6
Rel.Total E						64.25	64.25	163.44		163.4	64.25		38.55		98.1
Possible Rep(Hz)											5.0		8.33		
E to SB2009										1.0					0.60
Total E (GeV)										250.0					150.0

＊LLRF margin for A-bin has 17% only.

Maximum rep. rate is 10 Hz

Maximum repetition rate in the each bin is determined by the ratio of available power to utilized power multiplied 5Hz. If available power is set to the maximum power for highest bin And re-arrange the active klystron distribution, 10 Hz operation is possible without any scarifying efficiency. This is achieved when the accelerated power in the each bin is equal (see lower table).

This kind of discussion strongly depends on the cavity variation distribution, Above conclusion Is come from uniform distribution. Cryomodule cooling capability should be checked.

ALL DC Power Supply & Mod. Capacity with Pulse width of 2.3ms

Sorting Bin	Sorting Range	Lowest % of Bin	Lowest E(MV/m)	Kly Pout(kW) with 20% Margin	Pulse Width	Capacity of PS	Pout AV(kW)	Min. Acc Gain(MV)	Uniform Kly Distribution	SB2009 Energy Gain/Bin	SB2009 Kly Av. Power	LC・10Hz(150 GeV Op.)Kly Av P. Weighted Disri	LC・10Hz Kly Av. Power (150GeV Acc)	Possible Rep. No. for Bin	10Hz Energy
		%	MV/m	kW	ms	kw/Bin/kly	kw/Bin/kly	MeV/Bin/kly	Unit	MeV/Bin/kly	kw/Bin/kly	Unit/SB09	kw/Bin/kly	Hz	MeV/Bin/kly
										SB2009		Low Current 10Hz 150GeV			
A	120-112%	112	36.8	814.65	2.30	15.62	15.62	38.14	1.0	38.1	15.62	0.50	7.7	10.10	18.9
B	112-104%	104	34.1	768.35	2.25	15.62	14.40	35.41	1.0	35.4	14.40	0.54	7.7	10.10	19.0
C	104-96%	96	31.5	709.60	2.18	15.62	12.89	32.69	1.0	32.7	12.89	0.60	7.7	10.10	19.6
D	96-88%	88	28.9	653.15	2.11	15.62	11.47	29.96	1.0	30.0	11.47	0.67	7.7	10.10	20.2
E	88-80%	80	26.3	599.05	2.03	15.62	10.15	27.24	1.0	27.2	10.15	0.76	7.7	10.10	20.8
Average		96	31.5	708.96		15.62	12.91	32.69	1.0	32.7	12.91	0.61	7.74		19.6
Total						78.09	64.53	163.44		163.4	64.53		38.68		98.1
Possible Rep(Hz)											5.0		10.00		
E to SB2009										1.0					0.60
Total E (GeV)										250.0					150.0

Cost consideration of low energy 10 Hz option in DRFS

- Since the layout of low energy 10 Hz option in DRFS are same as the reduced bunch operation, basic cost is same as reduced bunch scheme.
- Consideration of available maximum repetition rate, all P/S should have a maximum available power of the highest sorting bin, this is the constraint for reduced bunch scheme. This constraint results in18% cost up, while SB2009 is also necessary to accept this scheme s long as accepting cavity field variation of +-20%.

DRFS-Cost 110115A
Switching Regulator P/S

2011/1/15
(BAW2)

DRFS	Standard		Low P		Cost Impact
	No@26 Cav	Cost	No@26 Cav	Cost	%
DC PS w Backup	1.5	447	0.75	223	20% Incr
MA Modulator	1.5	90	0.75	60	
MA Klystron	13	845	6.5	423	
PDS	13	91	20	137	
		1473		842	57.2
DRFS/BCD Full		1.27		0.73	
BCD	Standard		Low P		Cost Impact
	No@26 Cav	Cost	No@26 Cav	Cost	%
Mod	1	515	0.5	297	
Kly	1	300	0.5	150	
PDS	1	345	0.5	173	
		1160		620	53.4

Switching Regulator P/S

2011/1/15
(BAW2)

DRFS	Standard		Low P		Cost Impact
	No@26 Cav	Cost	No@26 Cav	Cost	%
DC PS w Backup	1.5	420	0.75	223	20% Incr
MA Modulator	1.5	90	0.75	60	
MA Klystron	13	845	6.5	423	
PDS	13	91	20	137	
		1446		842	58.2
DRFS/BCD Full		1.25		0.73	
BCD	Standard		Low P		Cost Impact
	No@26 Cav	Cost	No@26 Cav	Cost	%
Mod	1	515	0.5	297	
Kly	1	300	0.5	150	
PDS	1	345	0.5	173	
		1160		620	53.4

420 means half PS has 2.3ms pulse capability and other half has 1.65ms pulse capability.

Consideration of Heat Dissipation in LE 10 Hz

In the case of Low-energy 10 Hz operation, situation is complex.

- For positron linac, 5 Hz, 125 GeV acceleration is performed and average power specification is obeyed in this requirement.
- For electron linac, 10 Hz operation comprises of 5 Hz 150 GeV acceleration and 5 Hz 125 GeV acceleration, in pulse by pulse operation.
  - HV power supply for DRFS klystrons supplies high voltage necessary to the RF power of 150 GeV acceleration in electron linac.
  - From the view point of average power of P/S, this corresponds to the average power of 150 GeV acceleration. For average power of P/S in the entire electron linac, choosing the active klystron numbers shown in slide 11, 10 Hz operation is almost the same as the capability of initial design value.
  - Averaged loss come from P/S is the same as full energy case.
  - For collector dissipation of DRFS klystrons, since LLRF changes the operation points in both acceleration mode, collector loss of 150 GeV case is smaller than 125 GeV case. So water cooling load is the one of 125 GeV case. This cooling load is larger than the positron's 125 GeV case, since applied high voltage is different. Since total averaged power is balanced in 10 Hz, requirement for the water cooling would be the same situation. We should evaluated it in detail.

Summary

- We presented 2 kinds of scenario in DRFS. Old scenario requires a-week's modification period between the transition of operation.
- In new scheme of low energy 10Hz operation, it is possible to accelerate beams in wide range of energy. There are no period to interrupt the beam schedule comparing with the previous DRFS model.
- In 250 GeV CM energy, maximum rep. rate of 10 Hz is possible without any degradation of the RF efficiency when cavity variation distribution is uniform.
- There is no particular cost up relating with this mode from SB2009 in scenerio-2.
- Heat dissipation in this option is also discussed.