Low-Q IPBPM and Electronics for the IP feedback

A.Y. Heo, S.W. Jang, J.K. Hwang
H.S. Kim, H.K. Park, E.S. Kim

Accelerator Physics Lab.
KNU (KyungPook National Univ.)

Contents

Introduction and Motivation

- Goal 2 for multi-bunch beam stabilizations in KEK-ATF2
  - ✓ Achievement of vertical beam size of 37 nm rms
  - ✓ Control of vertical beam position by a few nanometer
- Beam stabilization for multi-bunch operation requires using of a low-Q cavity BPM
- Collaboration with FONT group for the decisions on position resolution and latency
- Electronics v1 (with Y-port only) ready to measure the position & resolution
- Design (tentative) for the electronics v2 (with both X and Y ports) was also performed in order to improve position & resolution sensitivities of the electronics v1
- Fabrication of electronics v2 will be started after beam study on BPM resolution with electronics v1 at ATF2 in this winter (and spring maybe)

Low-Q_{load} IPBPM Design

- Coupling Slot ; widening width & lengthening slot & moving toward center
- RF Coupler ; position & gap-distance tuning to decrease Q_{ext}

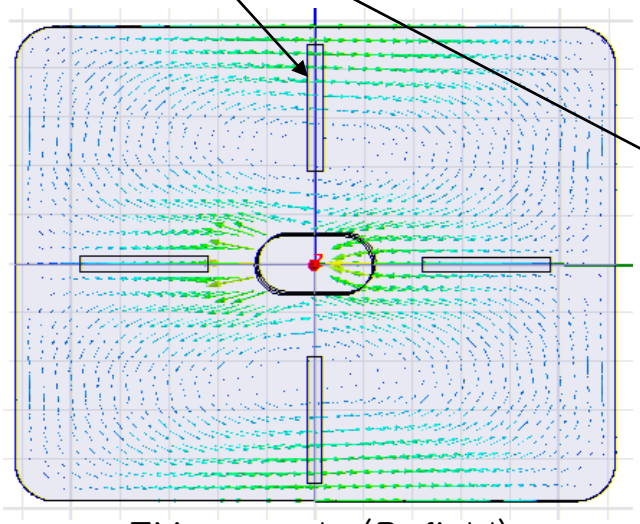

TM_{120}-mode (B-field)

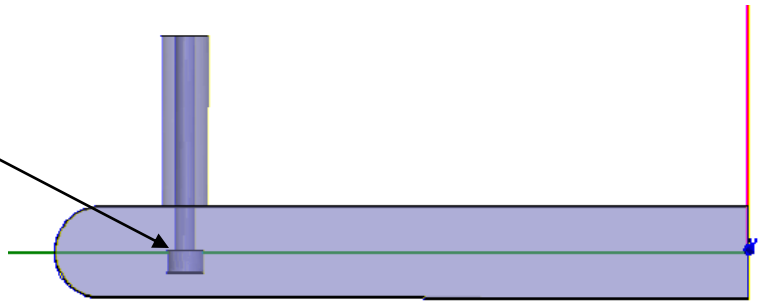

Bunch Separation=154ns ⇒ Q_{load}=403~650, DecayTime=15~18ns
Higher position sensitivity due to low Q_{ext}

$$V_{out,0} = \frac{q\omega}{2}\sqrt{\frac{Z}{Q_{ext}}(R/Q)}\exp\left(-\frac{\omega^2\sigma_z^2}{2c^2}\right) \qquad V_{out} = V_{out,0}\exp\left(-\frac{t}{2\tau}\right)\sin(\omega t+\phi)$$

Low-Q IPBPM Parts

Parameters of Low-Q IPBPM

Normalized shunt impedance (by MAFIA) S.H. Shin

Beam offset	Norm. Shunt Impedance	
	X-dipole mode	Y-dipole mode
1 mm	0.504 Ohm	1.440 Ohm
2 mm	2.011 Ohm	5.887 Ohm

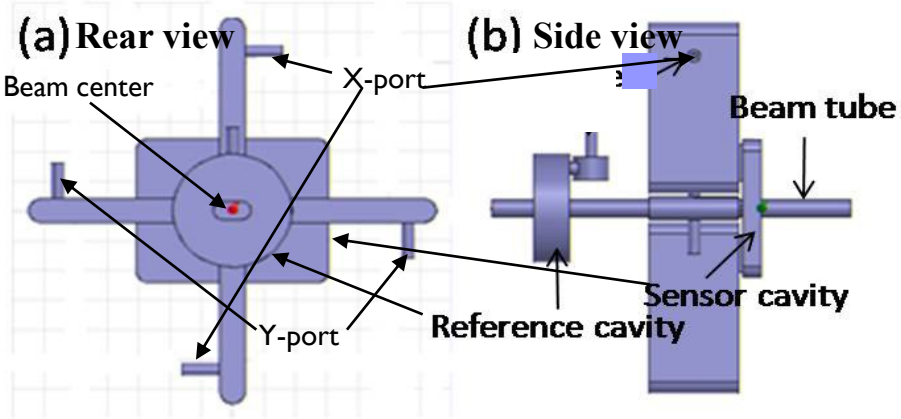

Design parameters (by HFSS)

port	f [MHz]	beta	Q_0	Q_{ext}	Decay Time (ns)
X	5,712	8	5,900	730	18
Y	6,426	9	6,020	670	15
Ref.	6,426	0.0117	1,170	10,0250	29

Calculation (by CST for V_{out} and formula for Power)

Port	Beam Offset	Position Sensitivity	0.5 X 10^{10} e^-	1 X 10^{10} e^-
X	1nm	2.2 μV/nm/nC	1.76uV (-102.1dBm)	3.52uV (-96.1dBm)
	2nm		3.52uV (-96.1dBm)	7.04uV (-90.0dBm)
Y	1nm	3.7 μV/nm/nC	2.96uV (-97.6dBm)	5.92uV (- 91.5dBm)
	2nm		5.92uV (-91.5dBm)	11.84uV (-85.5dBm)
Ref.	-	3.27 V/nC	2.62uV (21.4dBm)	5.23V (27.4dBm)

Formula

Di-pole $\frac{R}{Q}(y) = \frac{8LT^2}{\omega\epsilon_0 ab}\left(\frac{2\pi}{b}\right)^2 y^2$

a = 61.09 mm
b = 48.6 mm
L = 6.0 mm
ω = 2πx5714[MHz] in x & 2πx6426[MHz] in y
c= 3x10^8 m/s
T = sin(ωL/2c)/(ωL/2c) ; transit time factor
ε_0= 8.854x10^{-12} F/m
y = beam offset, and Q=Q_0

$$P_{out} = \frac{\omega U}{Q_{ext}} = \frac{\omega^2}{4Q_{ext}}(R/Q)q^2\exp\left(-\frac{\omega^2\sigma_z^2}{c^2}\right)$$

ω = 2πx5712[MHz] in x & 2πx6426[MHz] in y
q = 1.6x10^{-19}x10^{10} (Coulomb; charge) = 1.6nC
Q_{ext} = external Q factor of cavity
z = 50 Ohm
c = 3 x10^8 m/s
σ = 8.0x 10^{-3} m (bunch length in rms)

Conversion into Power [dBm]
→ 10 Log(P[W])+30
→ 10 Log($V[V]^2$/Z[Ohm])+30

Typical Design Parameters ; Low-Q IPBPM vs. High-Q IPBPM

Low-Q IPBPM

port	f [MHz]	beta	Q_0	Q_{ext}	Decay Time (ns)
X	5,712	8	5,900	730	18
Y	6,426	9	6,020	670	15

HIgh-Q IPBPM

T. Nakamura

port	f [MHz]	beta	Q_0	Q_{ext}	Decay Time (ns)
X	5,712	1.4	5,116	3,695	60
Y	6,426	3	4,834	1,595	30

Low-Q IPBPM ; signal decay

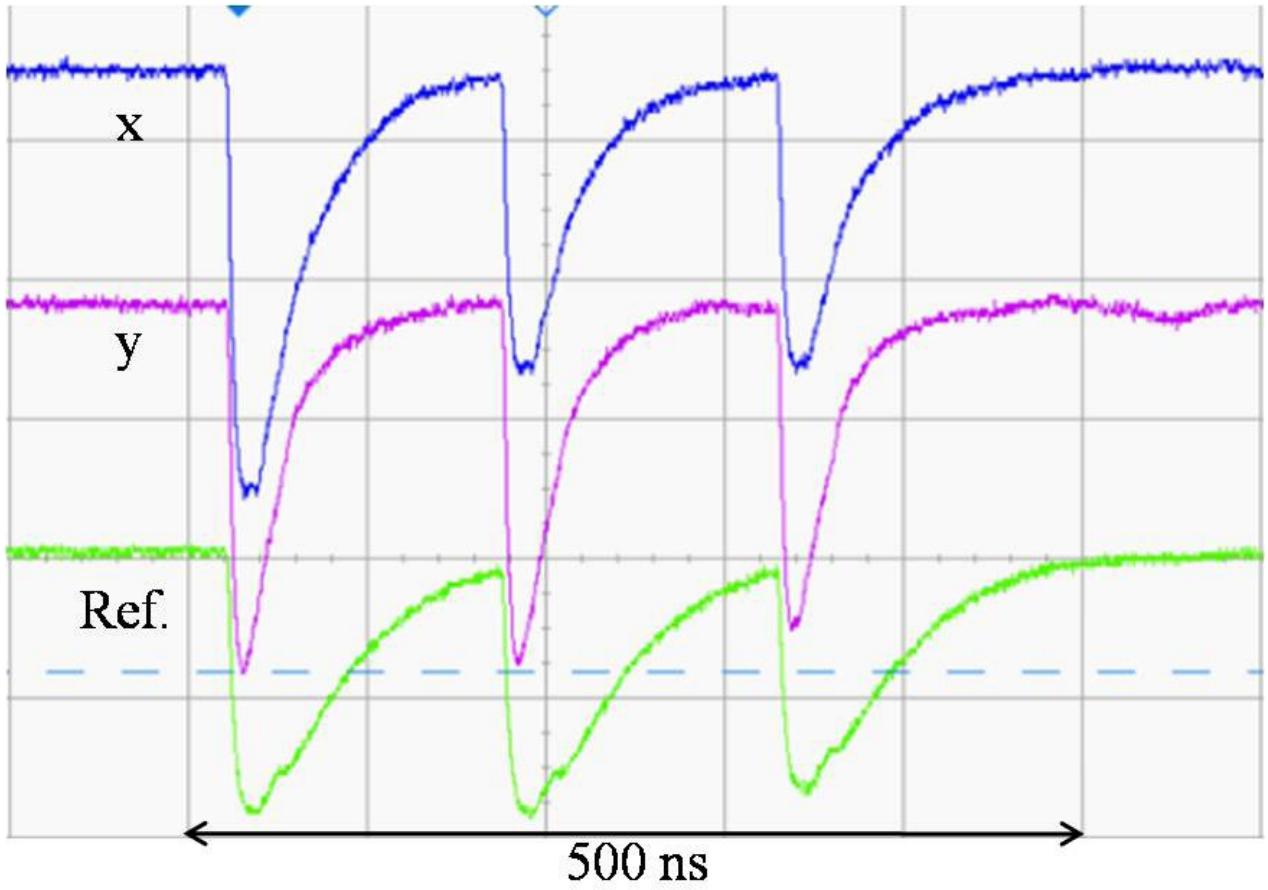

Multi-bunch beam position signals and beam intensity signal

Beam-offset vs. Power[1)] from the ports in Low-Q IPBPM

Beam offset	X-Port		Y-Port	
	Vout0 [V]	Power [dBm]	Vout0 [V]	Power [dBm]
1 nm	3.52E-06	-96.1	5.92E-06	-91.5
2 nm	7.04E-06	-90.0	1.18E-05	-85.5
3 nm	1.06E-05	-86.5	1.78E-05	-82.0
4 nm	1.41E-05	-84.0	2.37E-05	-79.5
5 nm	1.76E-05	-82.1	2.96E-05	-77.6
6 nm	2.11E-05	-80.5	3.55E-05	-76.0
7 nm	2.46E-05	-79.2	4.14E-05	-74.6
8 nm	2.82E-05	-78.0	4.74E-05	-73.5
9 nm	3.17E-05	-77.0	5.33E-05	-72.5
10 nm	3.52E-05	-76.1	5.92E-05	-71.5
11 nm	3.87E-05	-75.2	6.51E-05	-70.7
12 nm	4.22E-05	-74.5	7.10E-05	-70.0
13 nm	4.58E-05	-73.8	7.70E-05	-69.3
14 nm	4.93E-05	-73.1	8.29E-05	-68.6
15 nm	5.28E-05	-72.5	8.88E-05	-68.0
16 nm	5.63E-05	-72.0	9.47E-05	-67.5
17 nm	5.98E-05	-71.4	1.01E-04	-66.9
18 nm	6.34E-05	-71.0	1.07E-04	-66.4
19 nm	6.69E-05	-70.5	1.12E-04	-66.0
20 nm	7.04E-05	-70.0	1.18E-04	-65.5
100 nm	3.52E-04	-56.1	5.92E-04	-51.5
1 μm	3.52E-03	-36.1	5.92E-03	-31.5
10 μm	3.52E-02	-16.1	5.92E-02	-11.5
100 μm	3.52E-01	3.9	5.92E-01	8.5
1 mm	3.52E+00	23.9	5.92E+00	28.5

Thermal noise

BW [MHz]	N = kTB [dBm]
400	-88.0
300	-89.2
200	-91.0
100	-94.0
50	-97.0
40	-98.0
30	-99.2
20	-101.0
10	-104.0

noise decrease

latency decrease

k = Boltzmann's constant

$T_{in} = T_0 = 290K$, B = bandwidth

We will keep Δf b/t RF and LO within 100MHz. (from FONT)

Low-Q IPBPM Electronics v1

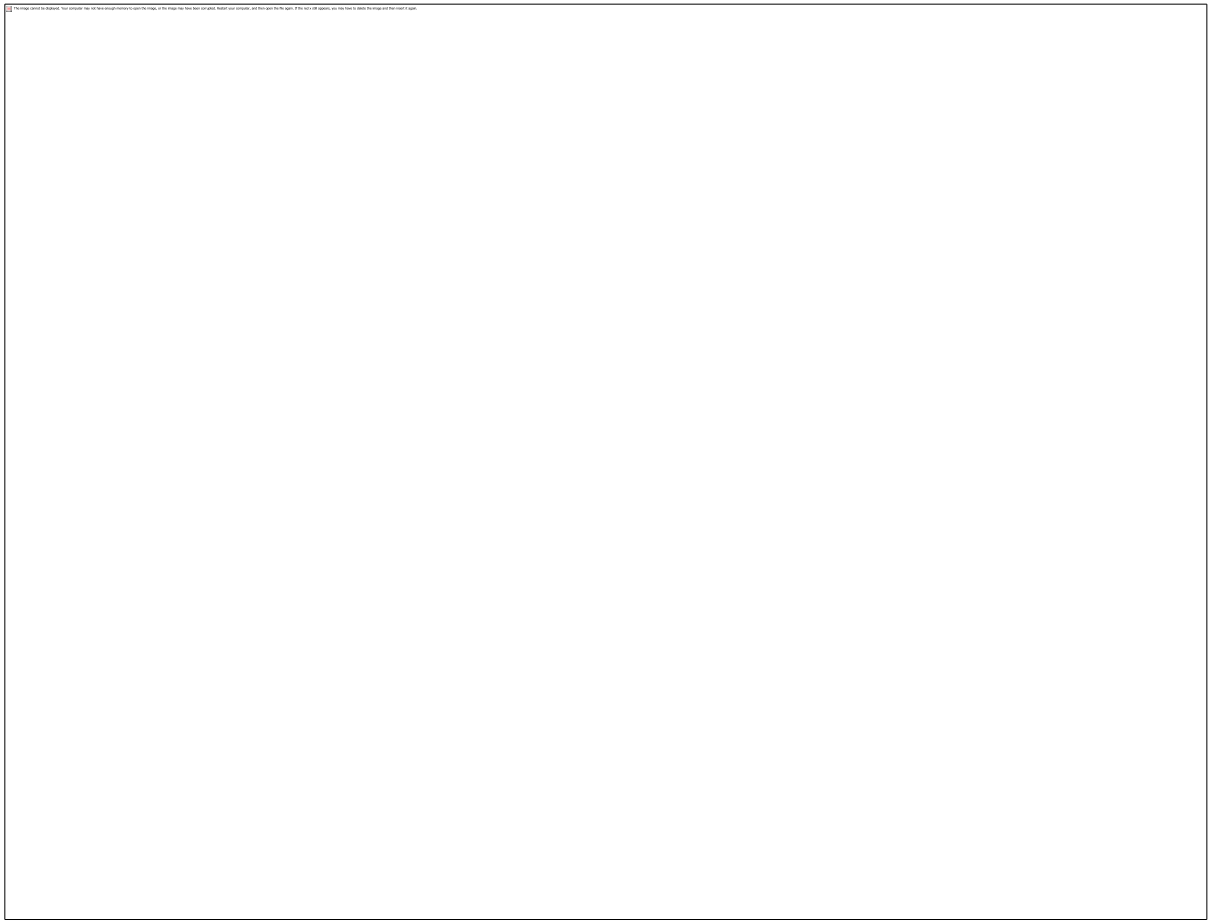

Position Sensitivity Test w/ Electronics v1 Dec. 2010

I-Q tuning (using phase shifer)

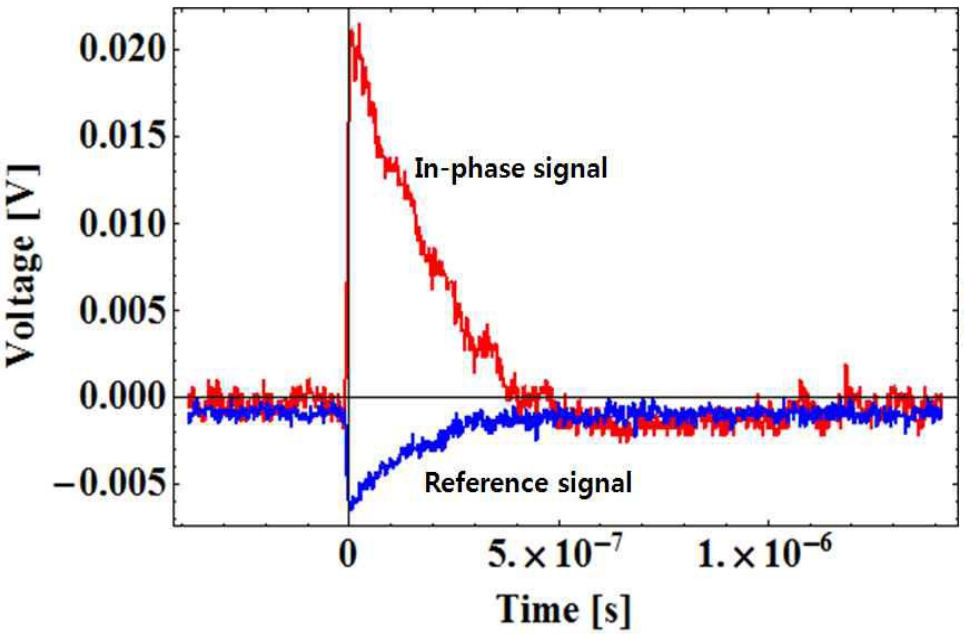

Position sensitivity 83.35mV/μm

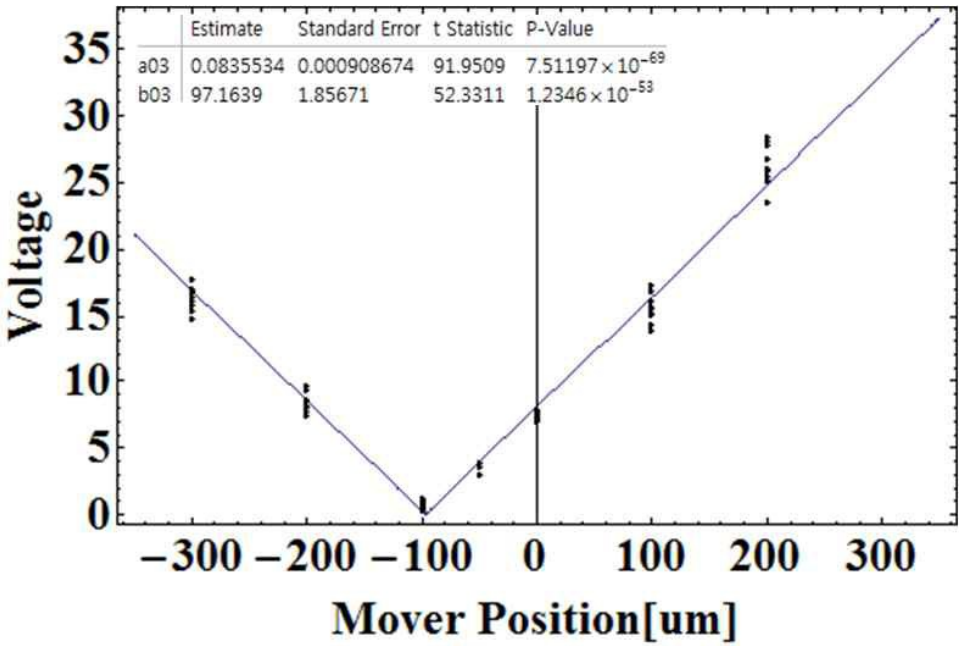

Electronics v1 w/ 10dB amp, MFB2FF BPM

KEK Electronics Layout for IPBPM

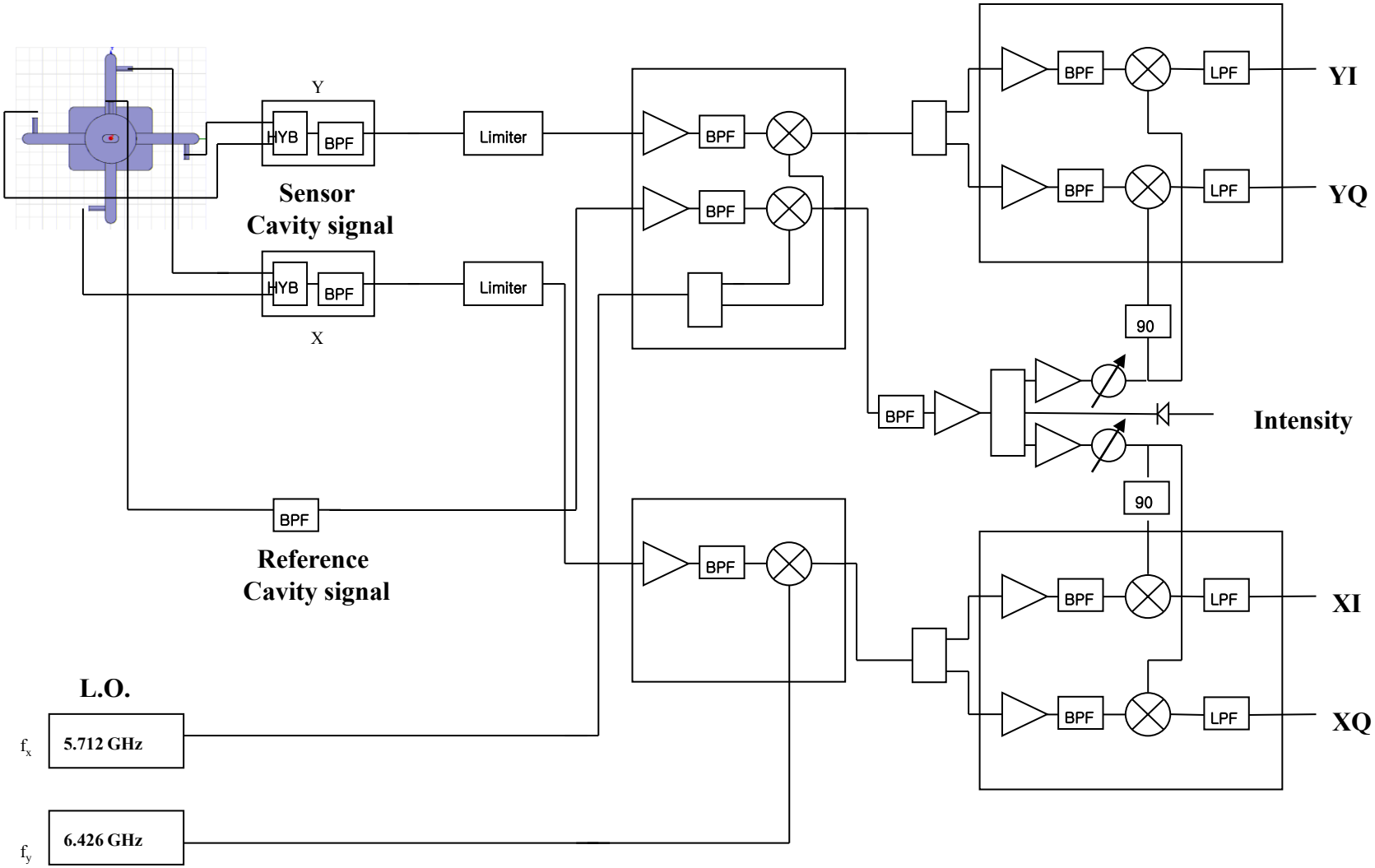

KNU Electronics v1 Layout for Low-Q IPBPM

Design Frequency

LO: 6426 MHz

RF: 6426 MHz

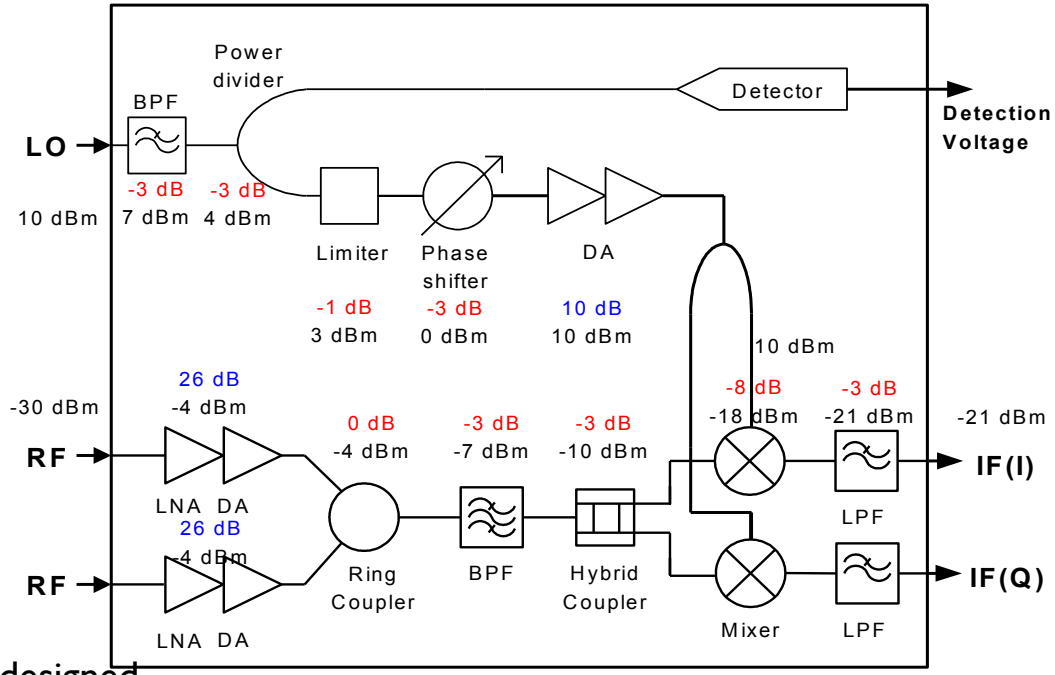

- Measured and designed Conversion Gain : 10 dB
- BW of LPF : 50MHz (Thermal Noise : -97 dBm)
- Measured N.F : 5dB (by NF analyzer) (equivalent noise power: -92dBm)
- Measured position resolution : not yet
- Measured Latency : 17ns

Low-Q IPBPM Electronics v1

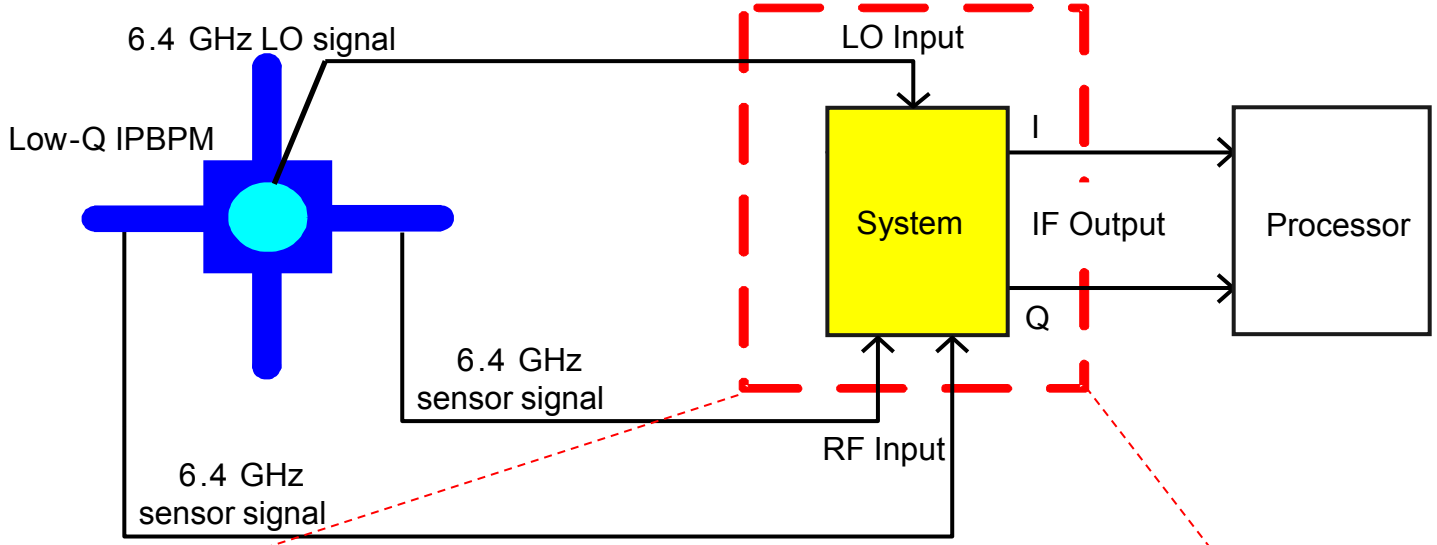

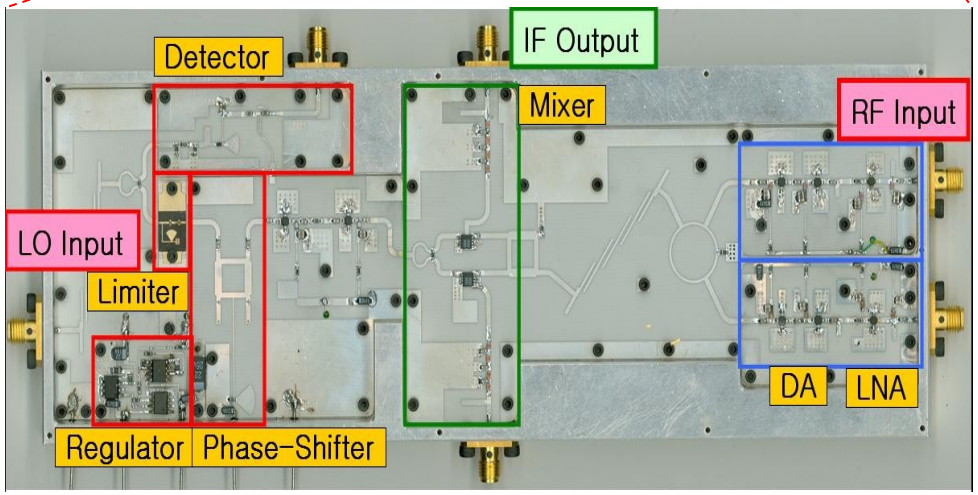

24.3 × 8 × 13.4 cm^3

N.F. Measurement in Electronics v1

*Freq [MHz]	First NF measurement [dB]	Second NF measurement [dB]
10	4.690	4.822
17	4.813	4.935
24	4.699	4.861
31	4.730	4.846
38	4.653	4.704
45	4.854	4.699

* Output frequency, namely difference between RF & LO
- Used NF analyzer : Agilent N8973A

➔ *Noise Figure of Electronics v1 : ~5dB*

$$N = k(T_{in}+(F-1)T_0)B$$

- N = Equivalent Noise Power
- k = Boltzmann's constant
- $T_{in} = T_0 = 290k$
- F = Noise Figure(NF)
- B = BandWidth(BW)

➔ *Equivalent input power: -92dBm*
➔ *Estimated resolution : ~2nm*
(considering only equivalent noise power with NF)

Gain measurement in Electronics of v1

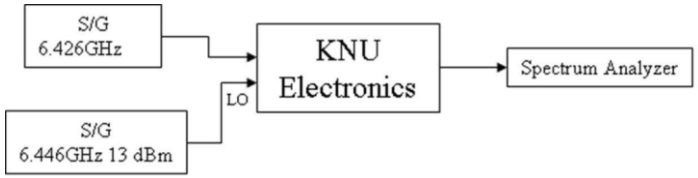

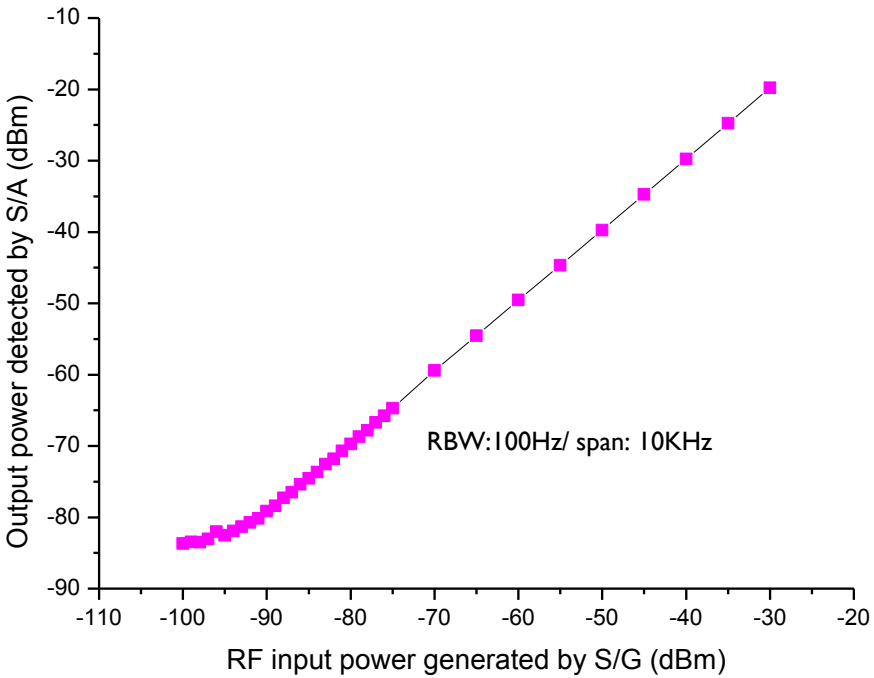

RF : 6.426GHz (Agilent E8557C)
LO: 6.446GHz, +13dBm (Anritzu MG3692B)
S/A: Agilent E4448A

Measured Conversion Gain: ~10dB

➔ *Electronics v1 cannot detect low input power such as power corresponding 2nm beam offset due to small conversion gain.*

➔ *when the gain is 10dB, sensitivity power is given by about -65.5dBm (with noise level of 366 uV in SIS3301)*

Required Parameters for Electronics v2

- Goals
  - Achievement of resolution of a few nanometers and the feedback of nanosecond time scale

- Latency < 40ns (X and Y ports)
- Dynamic Range: 2nm ~ 7nm, or ~1μm w/ add. variable attenuator (X and Y ports)
- Sensitivity and Gain

Port	Sensitivity for 2nm beam offset		Gain	
	0.5×10^{10} e^-	1×10^{10} e^-	0.5×10^{10} e^-	1×10^{10} e^-
X	3.52uV (-96.1dBm)	7.04uV (-90.0dBm)	40.3 dB	34.3 dB
Y	5.92uV (-91.5dBm)	11.84uV (-85.5dBm)	35.8 dB	29.8 dB
Ref.	2.62uV (21.4dBm)	5.23V (27.4dBm)	-	-

Calculation of Required Gain for 2 nm Resolution in Electronics v2

- When it is digitized by SIS3301
  - 14bit, +/-1V
  - Noise level (0~100MHz) ~ 2-3 ADC (244-366uV)
  - Gain = Noise level / sensitivity
    - 366uV / 7.04uV = 34.3dB in X (100% charge)
    - 366uV / 11.84uV = 29.8dB in Y (100% charge)
    - 366uV / 3.52uV = 40.3dB in X (50% charge)
    - 366uV / 5.92uV = 35.8dB in Y (50% charge)
- Higher gain than version 1 with 10 dB are necessary.
  - larger than 40.3dB in X (in 50% charge)
  - larger than 35.8dB in Y (in 50% charge)

Design for Electronics of Version 2

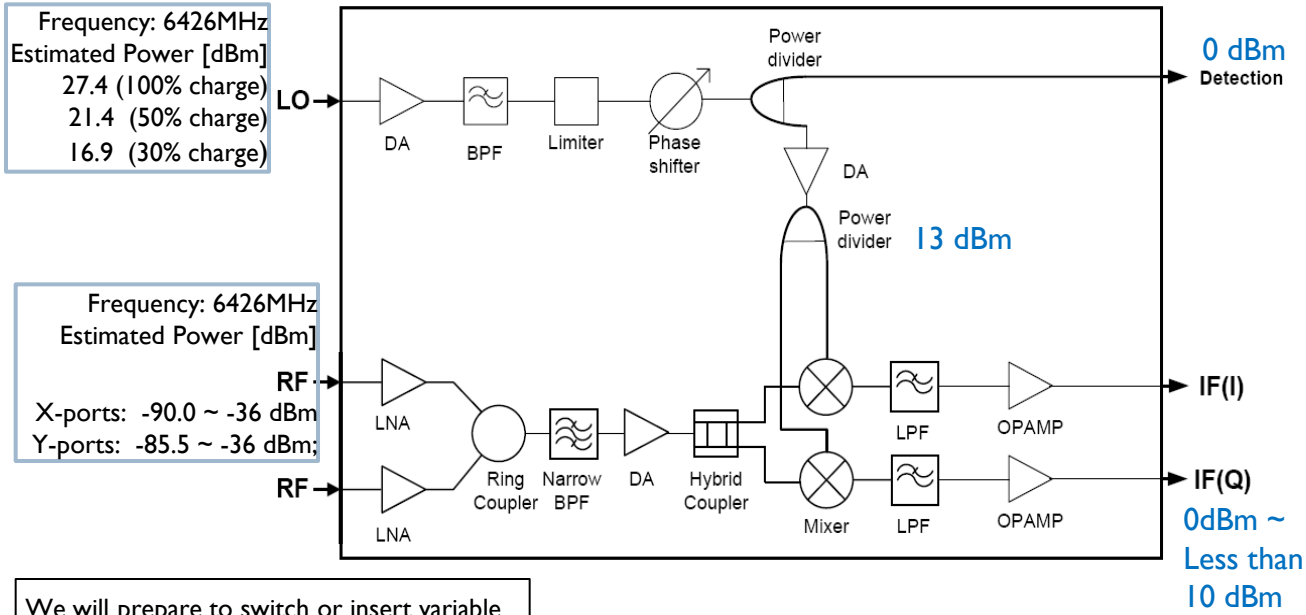

We will prepare to switch or insert variable attenuators before RF input ports (outside electronics)

	Values
BW of LPF	50MHz
Gain	45dB
Thermal Noise	-97dBm
Estimated Resolution due to thermal noise	1nm
Cascaded NF	2.88dB
Estimated Resolution considering NF	1nm (NF 2.88dB)
Estimated Latency	20ns
Estimated Latency due to only LPF test	17ns

- Conversion Gain : 40dB(X), 36dB(Y)
- BW of LPF : 50MHz
  (Thermal Noise : -97 dBm)
- Cascaded N.F : 2.88dB
  (equivalent noise power: -94dBm)
- Estimated position resolution : ~1nm
- Estimated Latency : 20ns

Beam Test w/ Low-Q IPBPM and Electronics v1 in this winter, and v2 will be fixed

KNU low-Q IP-BPM electronics v1

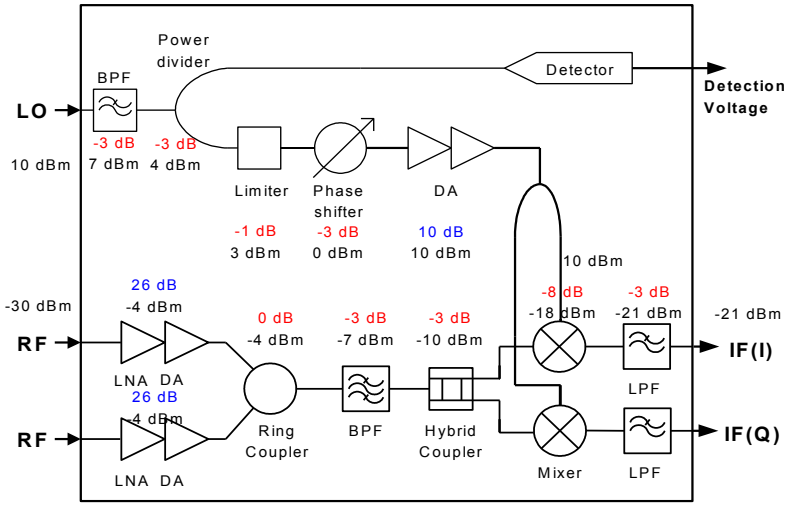

KNU low-Q IP-BPM electronics v2 (tentative)

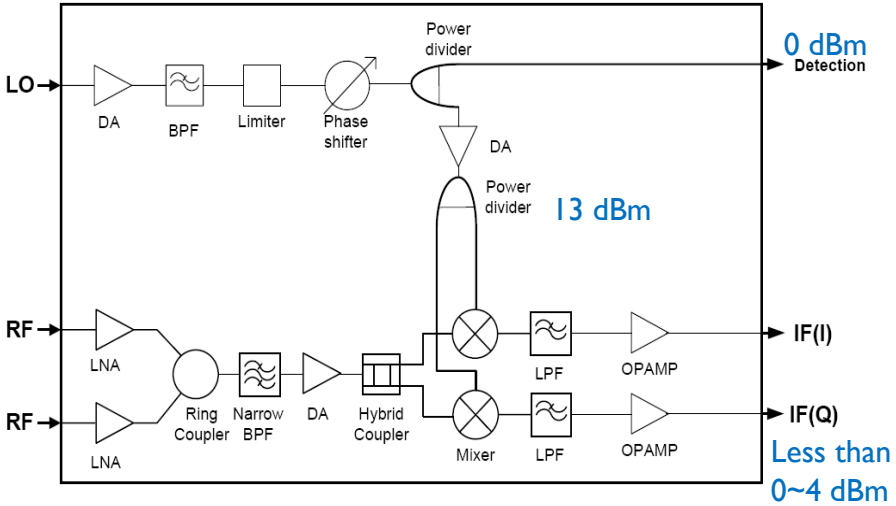

BEAM TEST (Jan. & March, '11)
-Position sensitivity
-Resolution measurement

High position sensitivity
Multi-bunch available

Experiment Layout (Jan. 2011)

- **Low-Q IPBPM Layout** **(1 KNU IP-BPM + 2 KEK IP-BPM)**

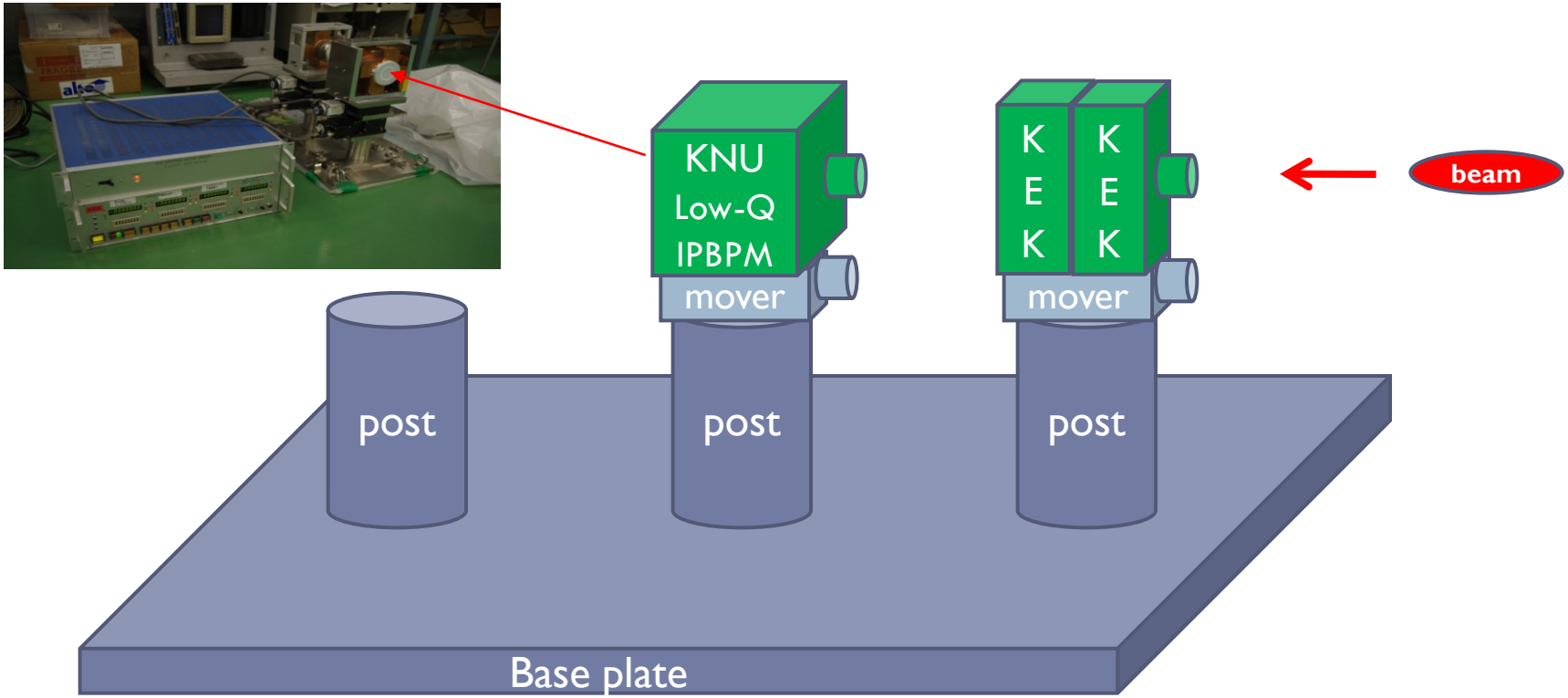

Experiment Layout (Jan. 2011)

- **Cable connection**

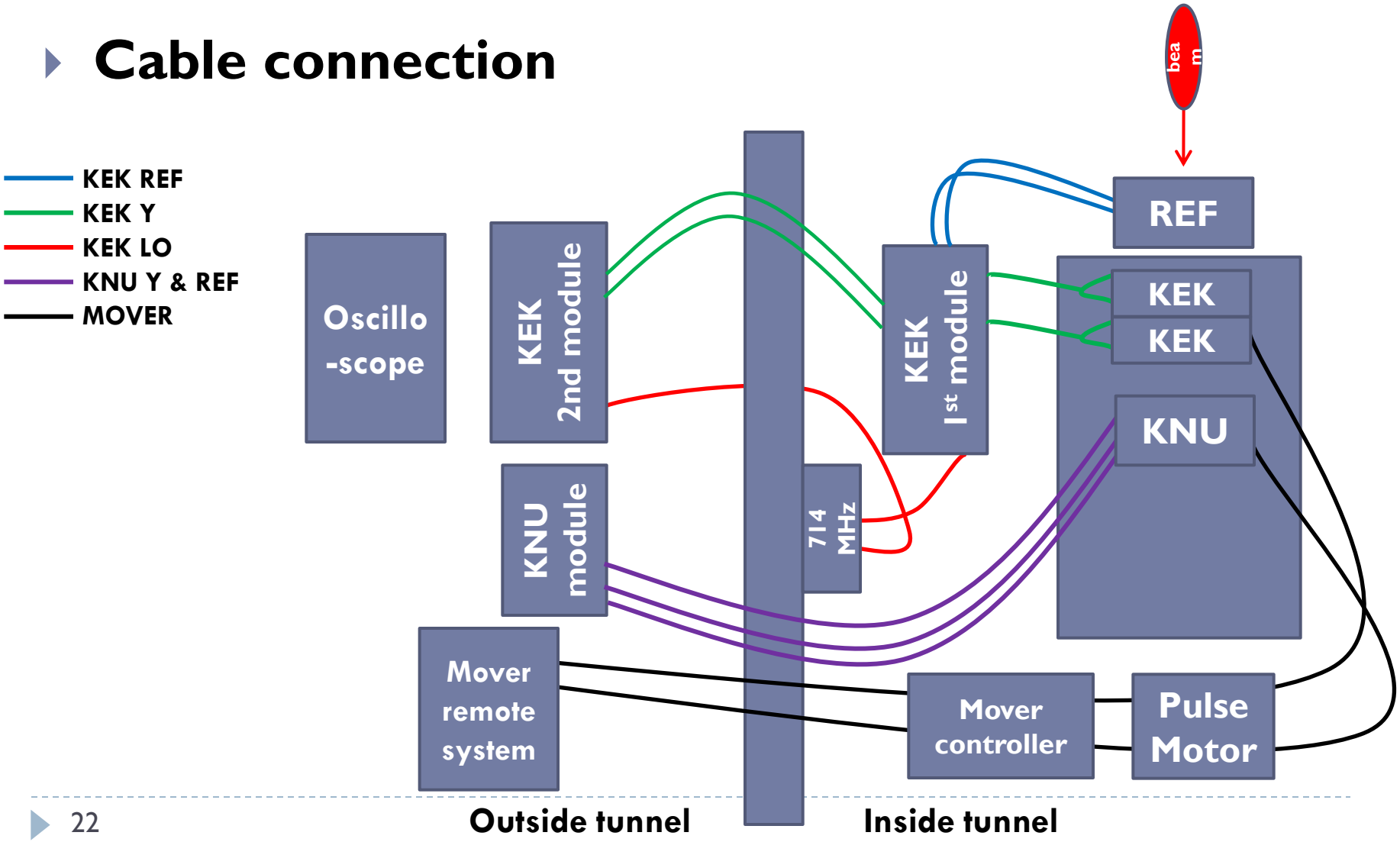

Experiment Plan (Jan. 2011)

- KNU electronics sensitivity for C-BPM
  - **w/ 10 dB Amp : 83.35uV/nm (-68.57 dBm) [Dec. 2010]**
  - w/o 10 dB Amp : 26.36uV/nm (-78.57 dBm)

- Convert to that of IPBPM
  - 1 μm for C-BPM [MFB2FF] => 0.234 μm for IPBPM
  - **w/ 10 dB Amp : 356.2uV/nm (-55.96dBm)**
  - w/o 10 dB Amp : 112.64uV/nm (-45.96dBm)
  - w/ 20 dB Amp : 1126.4uV/nm (−35.96dBm) (expected)

Experiment Plan (Jan. 2011)

- KNU electronics sensitivity for IPBPM
  - 122uV(ADC 14bit w/o amp) / (112.64uV/nm) = 1.083nm
  - **122uV(ADC 14bit 10dB amp) / (356.2uV/nm) = 0.343nm**
  - 122uV(ADC 14bit 20dB amp) / (1126.4uV/nm) = 0.108nm (expected)

  - 480uV(OSC 11bit w/o amp) / (112.64uV/nm) = 4.332nm
  - **480uV(OSC 11bit 10dB amp) / (356.2uV/nm) = 1.370nm**
  - 480uV(OSC 11bit 20dB amp) / (1126.4uV/nm) = 0.433nm (expected)

Further Study

- Low-Q IPBPM Calibration w/ Electronics v1
- Position Sensitivity test w/ Electronics v1 for Low-Q IPBPM depending on DAQ instruments (11bit Osc. and brand-new ADC)
- Resolution Measurement w/ add. 10 dB amp. and 20 dB amp.
- Revision on the Design of the Electronics v2, and Fab.
- Beam Study w/ Low-Q IPBPM and Electronics v2

- Compact 4 IPBPMs w/ Electronics v2 in IP region