Flux Concentrator
for SuperKEKB

Takuya Kamitani (KEK)

Motivation

- We have been developing a flux concentrator (FC) for SuperKEKB based on the SLAC/IHEP design.

- A QWT system of pulsed coil (2.0T) is replaced with an AMD system of the FC (3.5T) and the bridge coils (1.0T).

SuperKEKB positron station

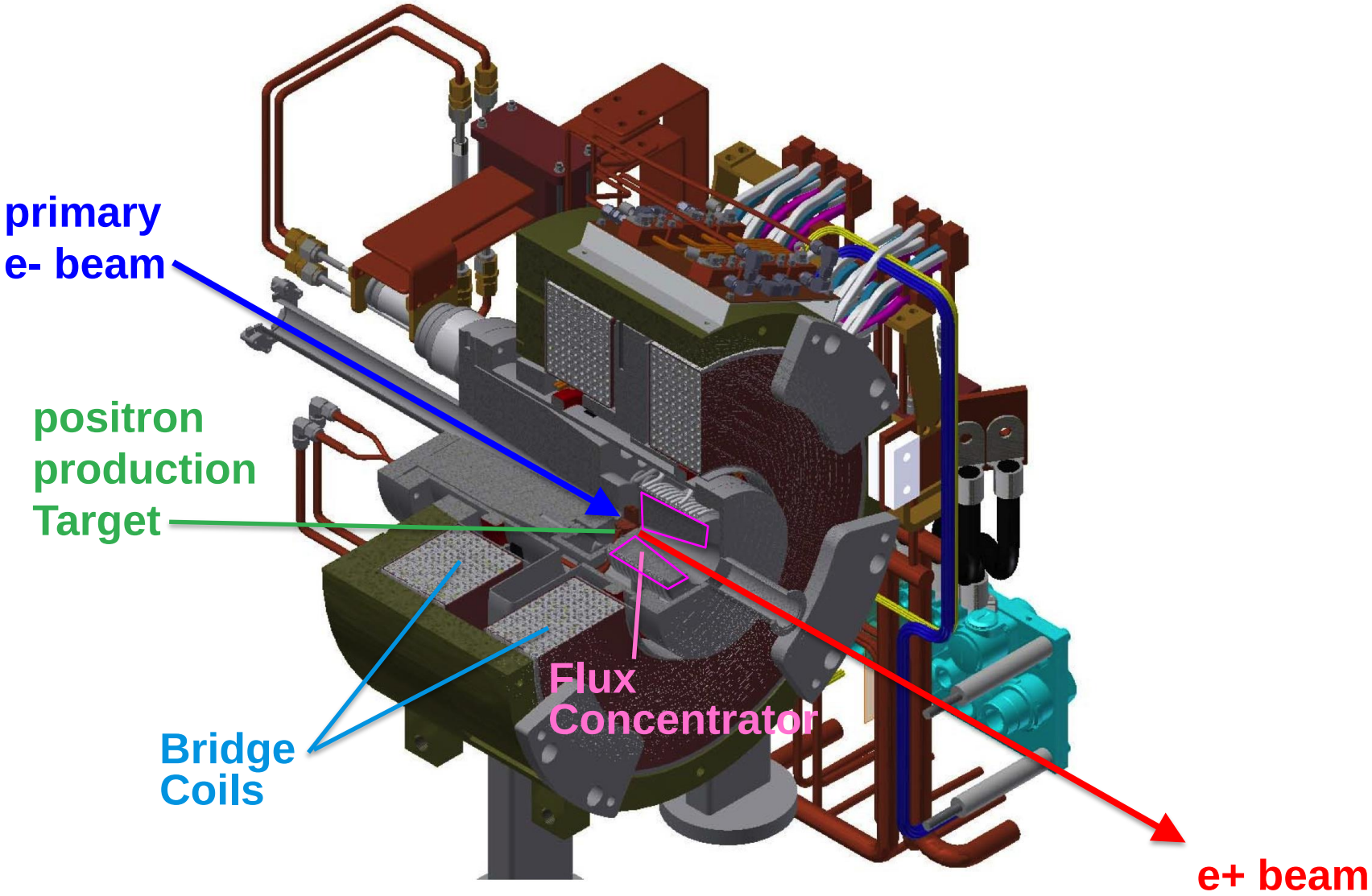

Positron Capture Section

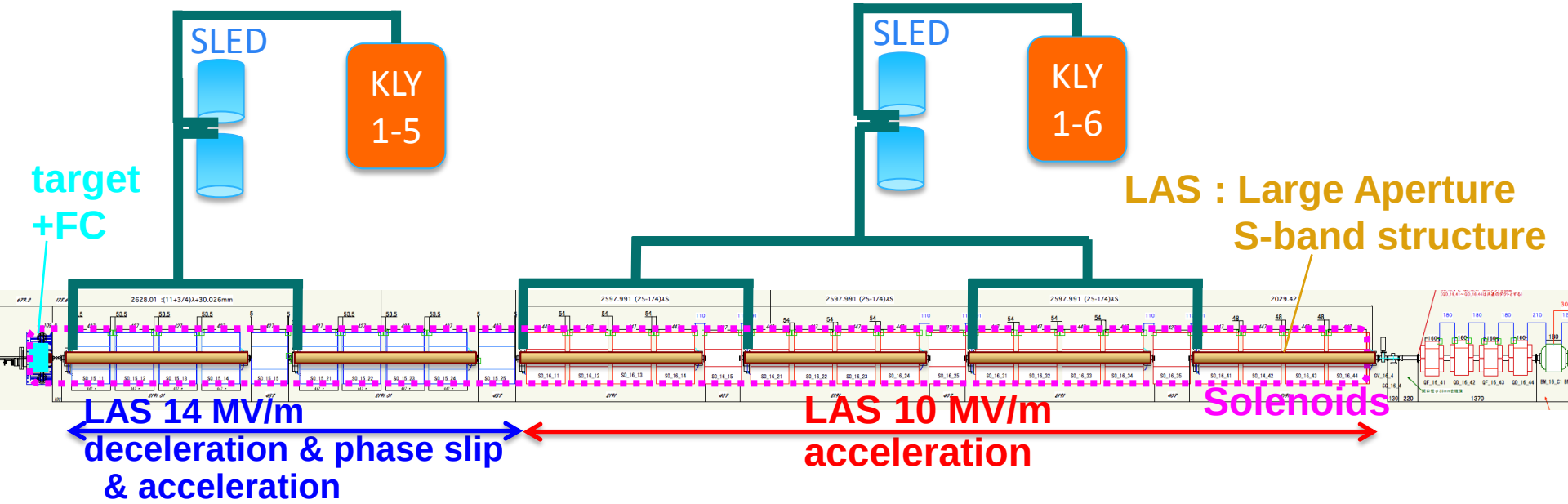

- Positrons are captured by (2m x6) large-aperture S-band structures (iris diameter 30mm) immersed in a solenoidal field (0.4T).

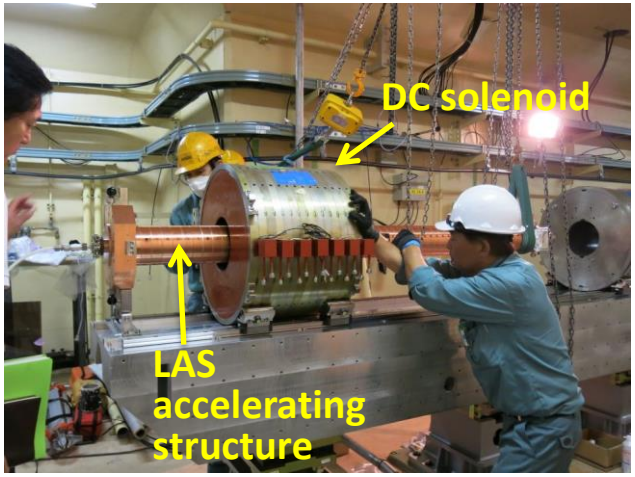

Offset layout of target & beam-hole

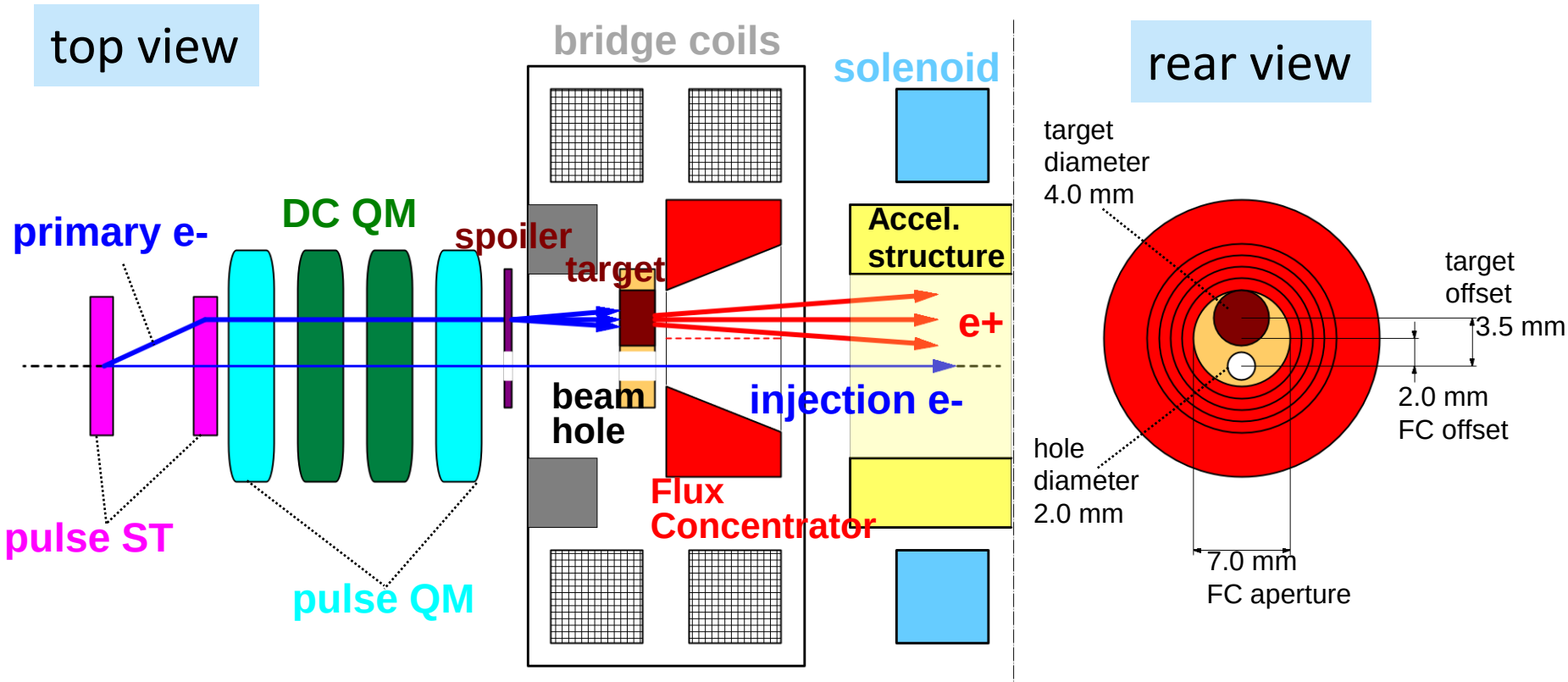

- For pulse-by-pulse switching of e+/e- injections, we have 3.5mm target offset from beam-line axis and 2.0mm dia. beam-hole on the axis.
- Both of them should be within 7.0mm FC aperture.

Positron production target

- A tungsten target (14mm => 4.0 X_0) is installed in front of FC with 2mm gap.

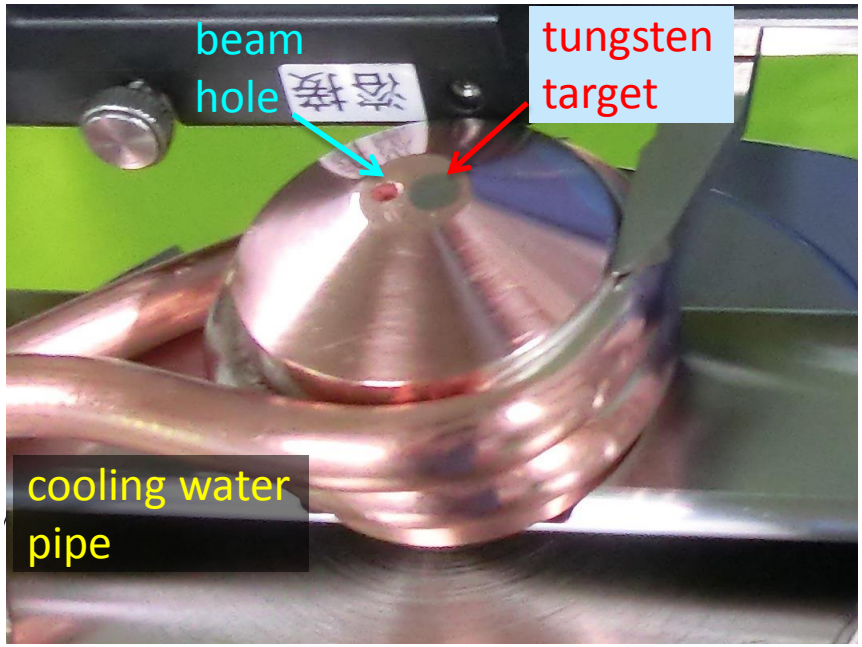

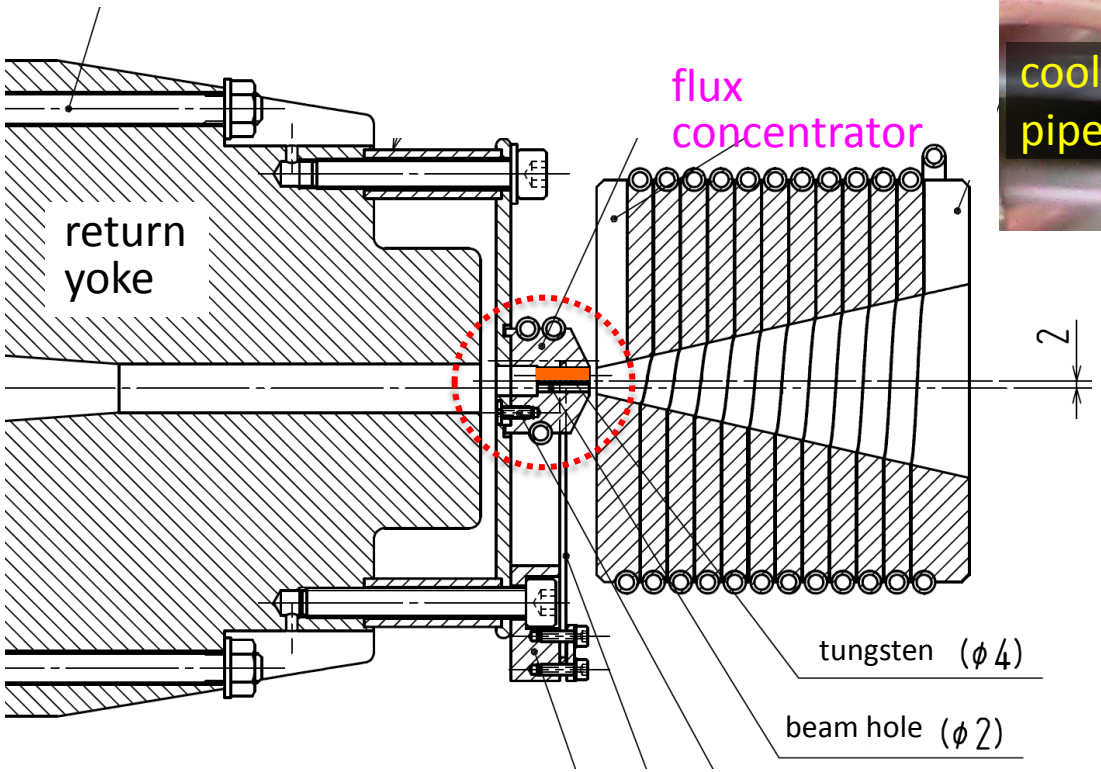

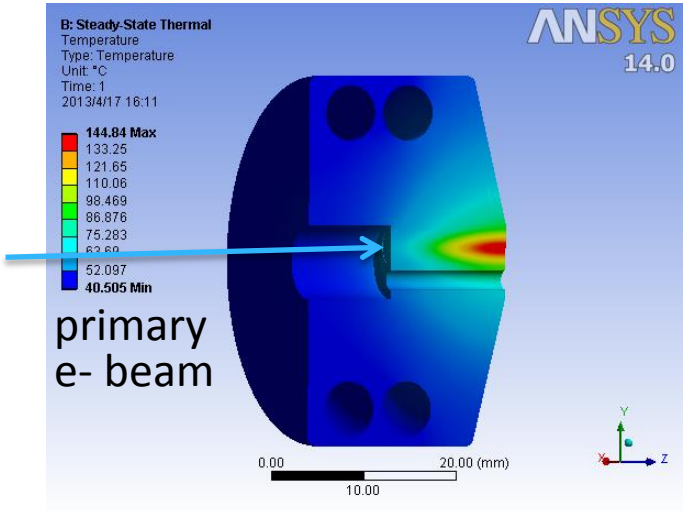

Spiral slit FC

- The SLAC-type FC has a conical hole and a spiral slit in a copper conductor
- slit gap is 0.2 ~ 0.3 mm

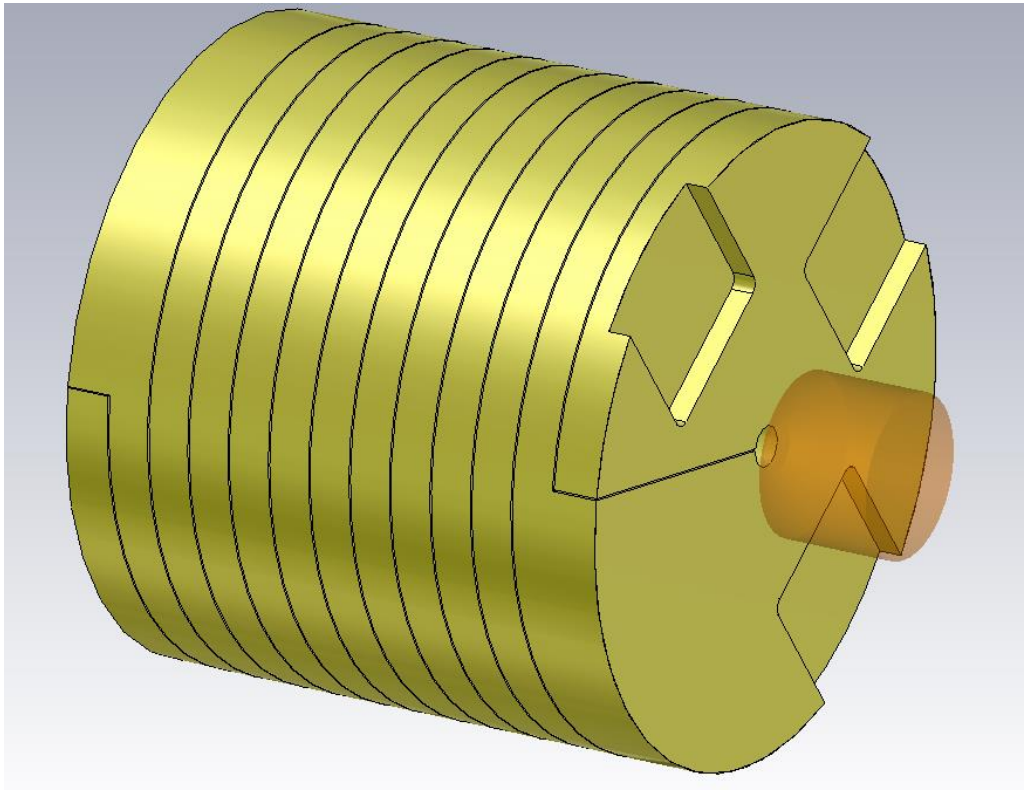

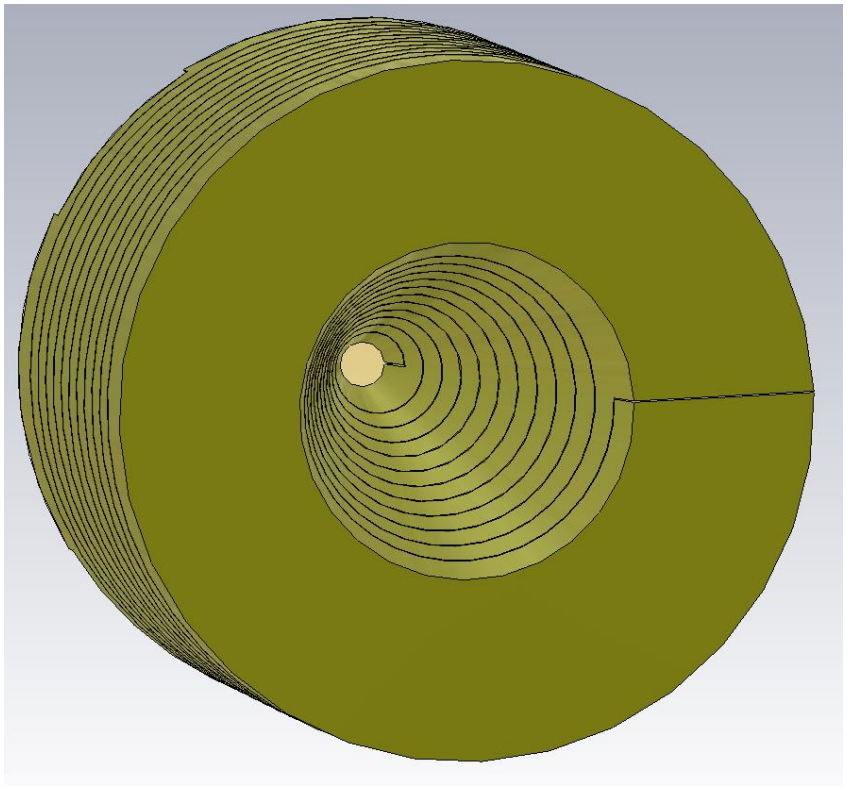

conductor pipe of FC

- a hollow conductor pipe is silver-brazed along the spiral.
- pulse currents are driven through the conductor pipe.

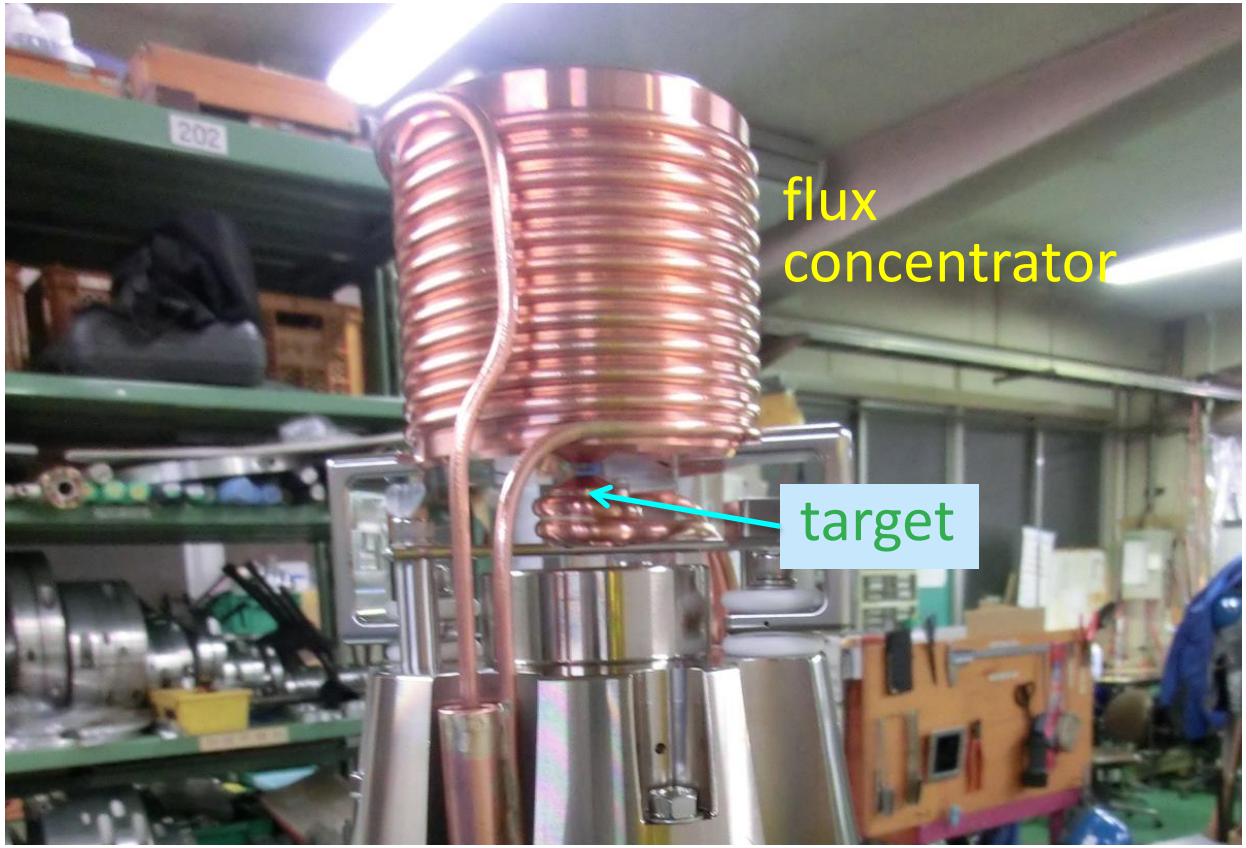

FC aperture, target & beam-hole

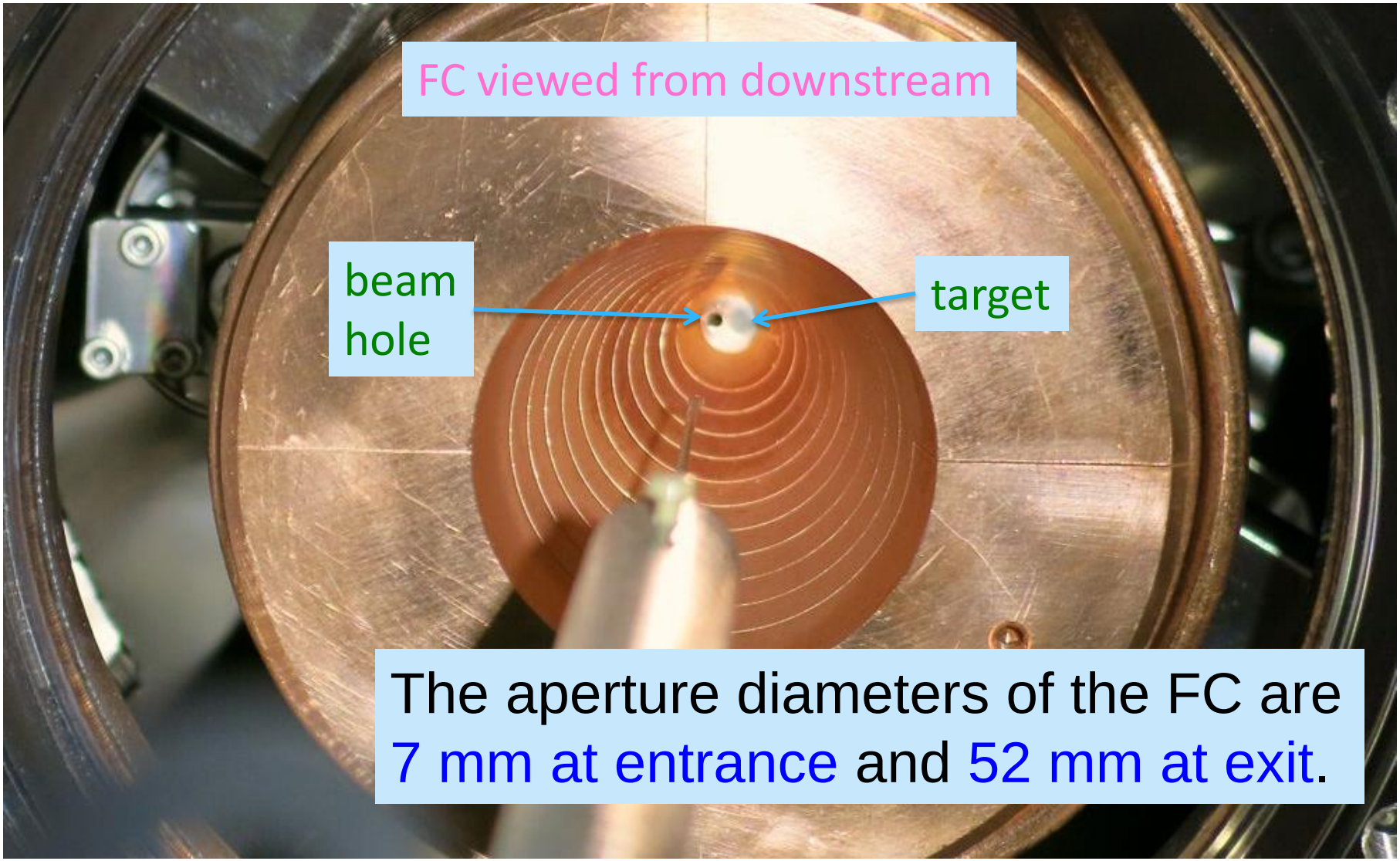

The aperture diameters of the FC are 7 mm at entrance and 52 mm at exit.

FC pulse modulator

- Pulse currents are driven from a half-spec (max 6 kA) temporary pulse modulator. (field strength ~ 1.9 T)
- pulse width is 5 μs.
- A full-spec (max 12 kA) modulator will replace this in 2015 March. The field strength will be 3.5 T.

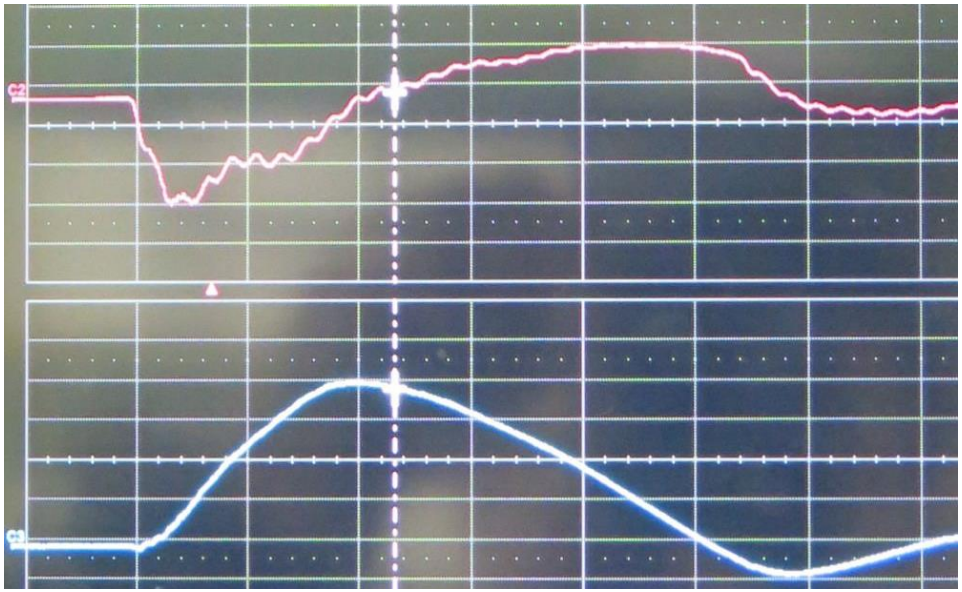

e+ capture section in linac tunnel

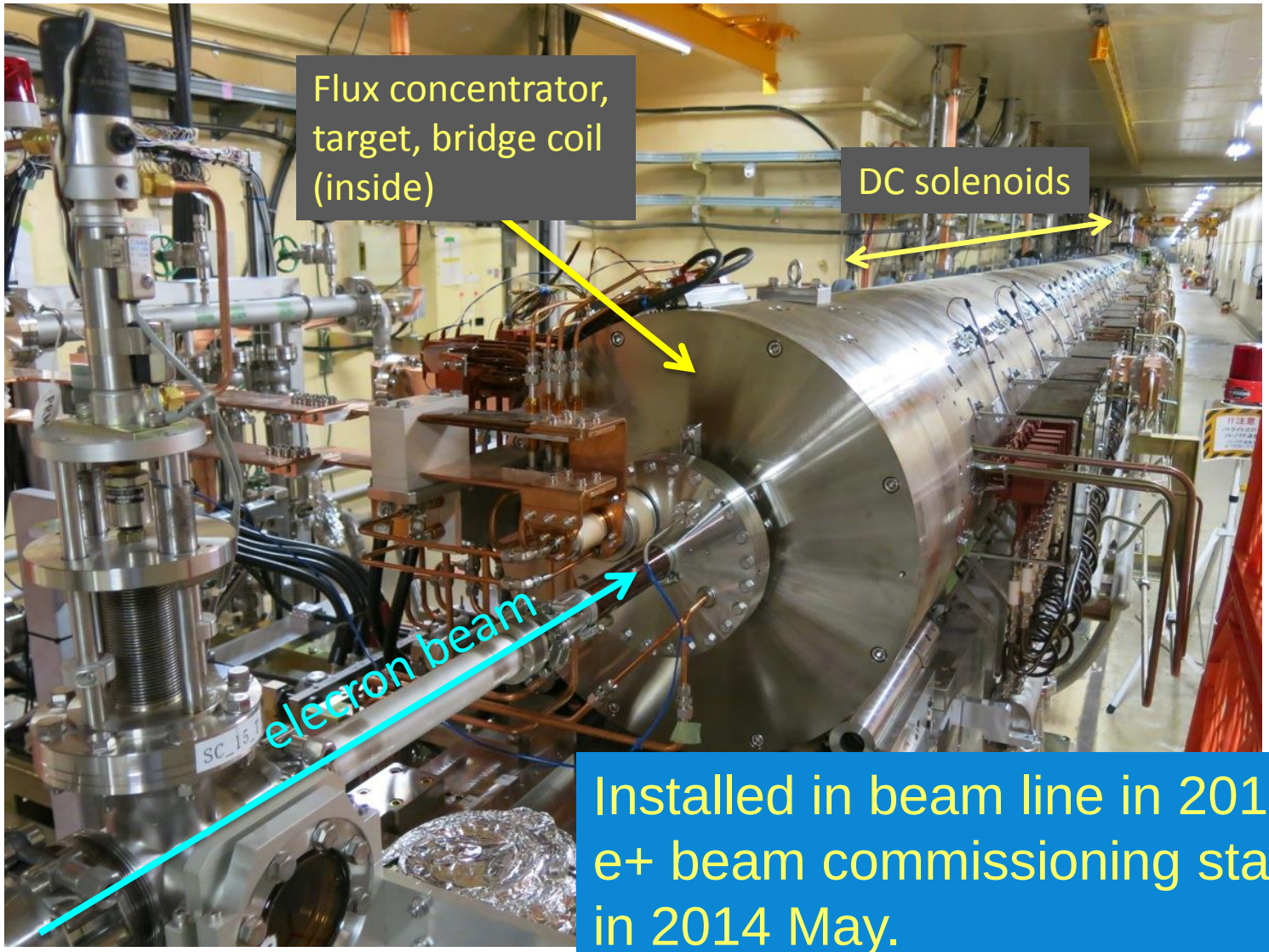

Installed in beam line in 2014 Apr.
e+ beam commissioning started in 2014 May.

FC pulse power line

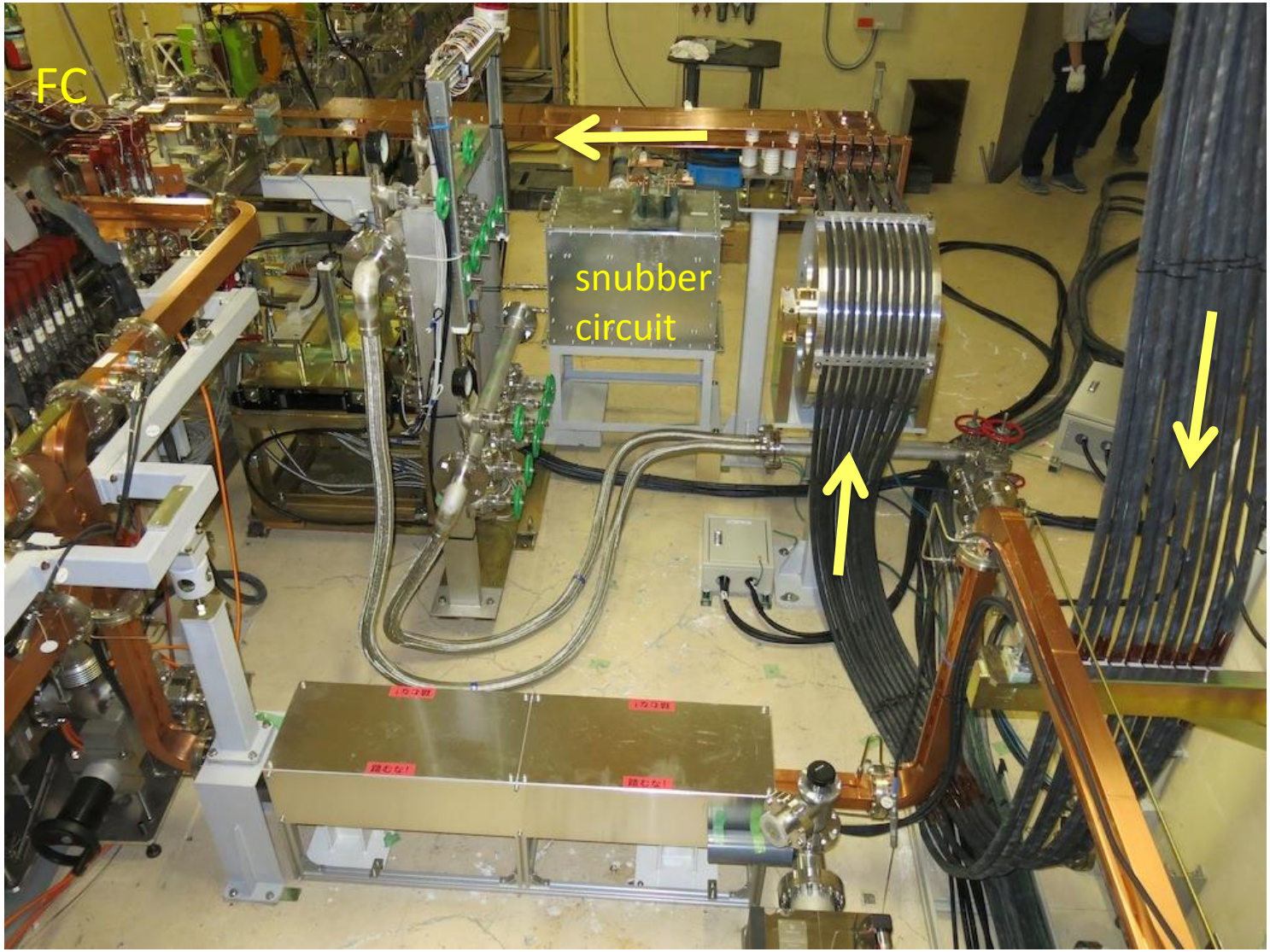

The first positron beam after the upgrade

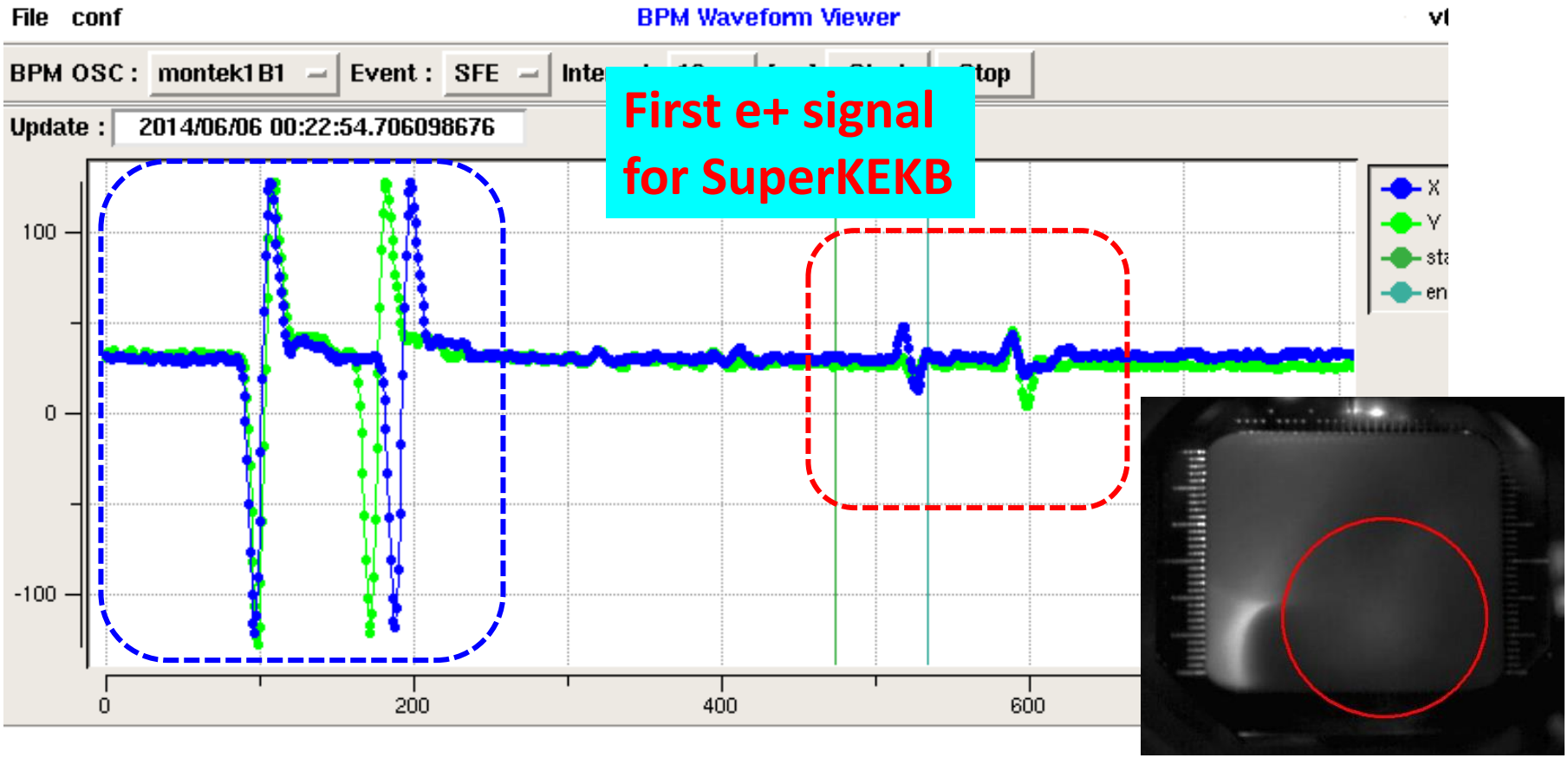

BPM: SP_15_T in front of target
negative charged particles (e- beam)
give **(-)(+)** bipolar signal

BPM: SP_16_5 after e+ capture section
(+)(-) signal indicates
positive charged particles (e+) !

e+ yield (achieved 2014 June)

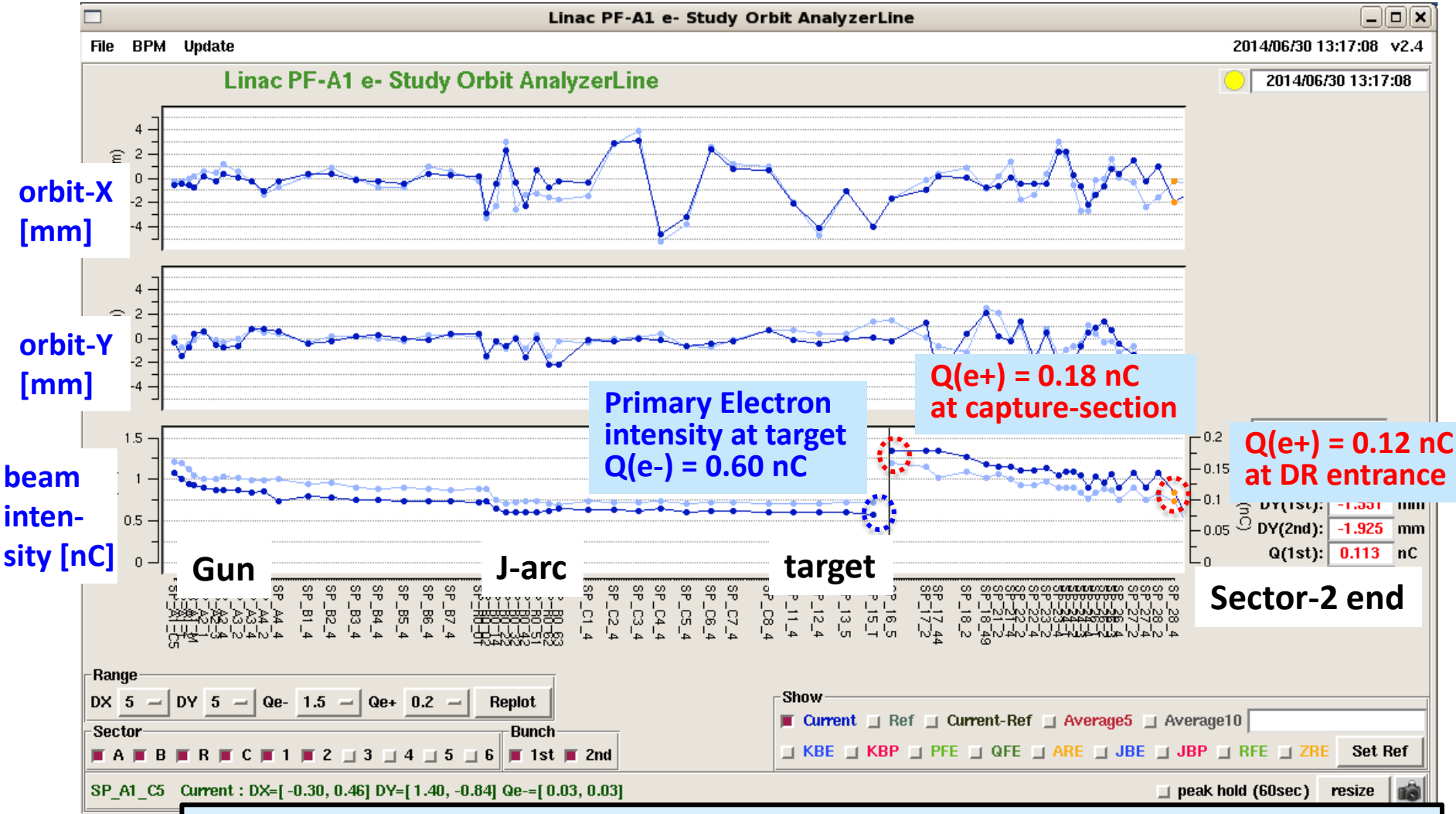

e+ yield (Ye+) = e+ charge (Qe+)/primary e- charge (Qe-)

Ye+ = 30% at capture section、Ye+ = 20% at SY2 for damping ring

e+ yield vs. FC current

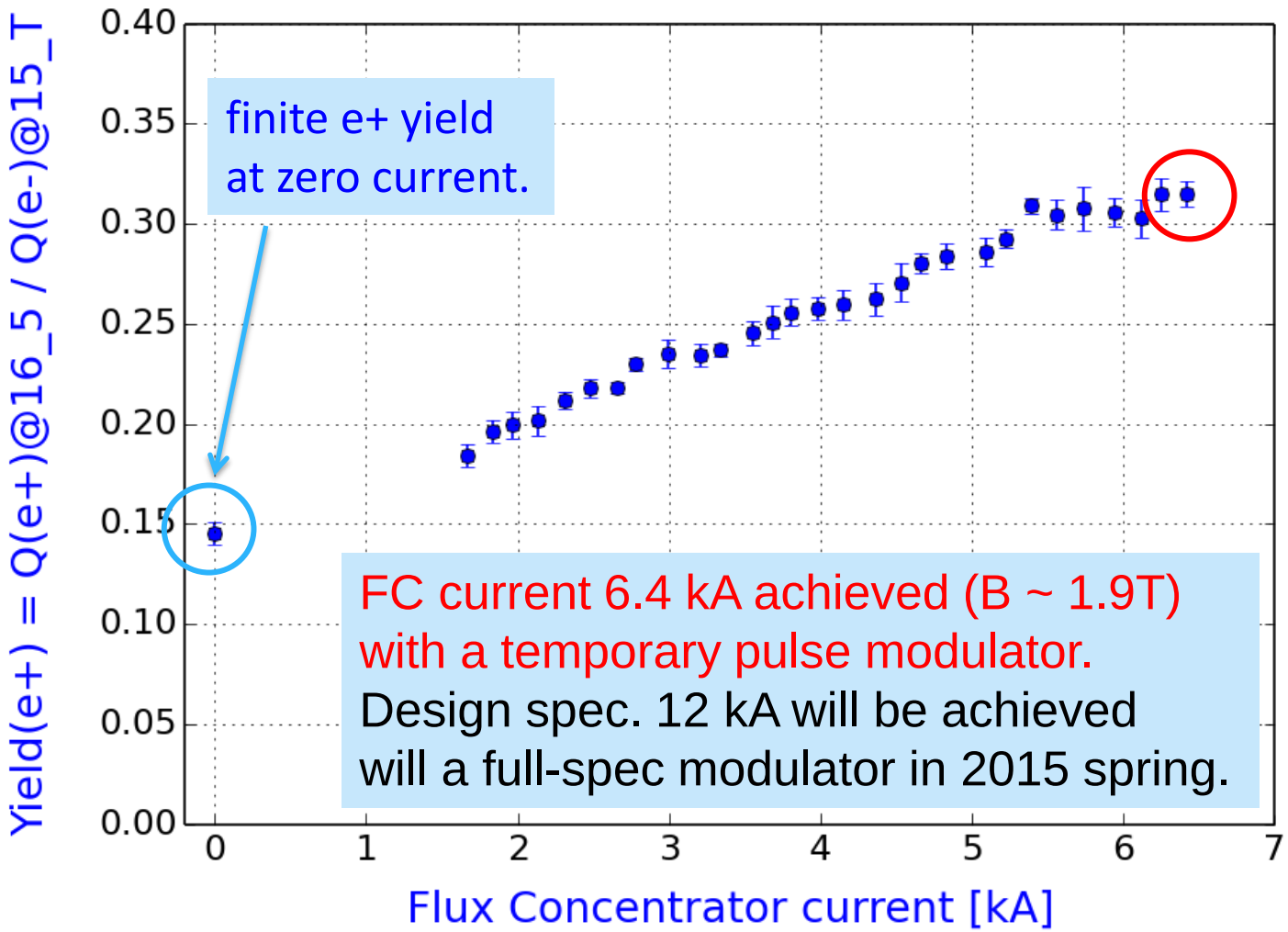

e+ yield vs. bridge coil current

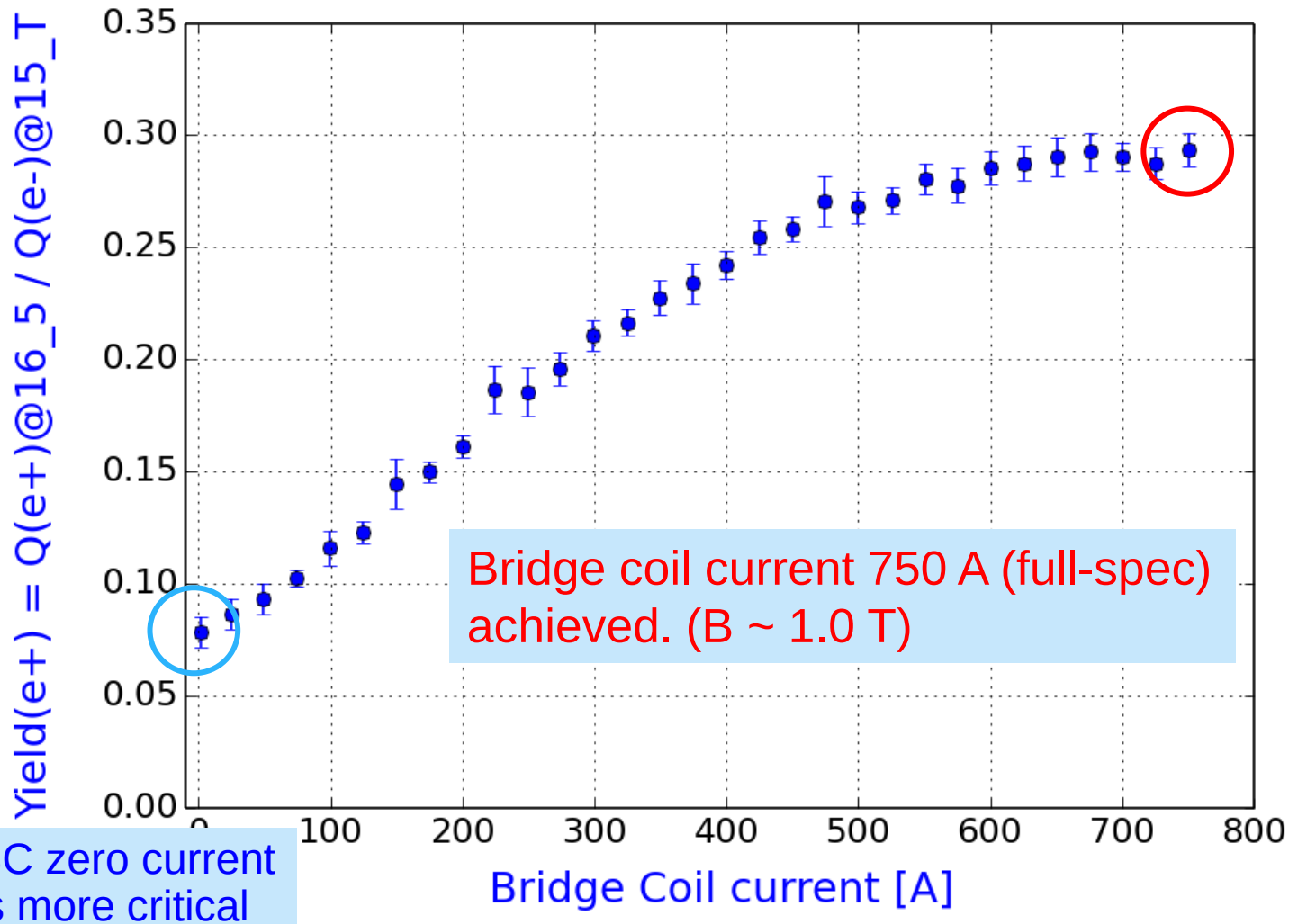

Bridge coil current 750 A (full-spec) achieved. (B ~ 1.0 T)

BC zero current is more critical than FC.

Summary

1) A flux concentrator for SuperKEKB has been developed and installed in the positron station with the capture section in 2014 April.

2) Operation current (6.4 kA => 1.9 T) is still lower than the design (12 kA => 3.5 T) due to performance limit of the temporary modulator.

3) Initial e+ beam commssioning started and first e+ for SuperKEKB observed in 2014 June, e+ charge and yield still low, but to be improved by boosting FC current and other parameters.