MDI/CFS Developments in Japan

on behalf of the MDI, CFS working groups in Japan

Toshiaki Tauchi, Special SiD Workshop in Japan,
University of Tokyo, 2-3 September 2014

ILC Time Line: Progress and Prospect

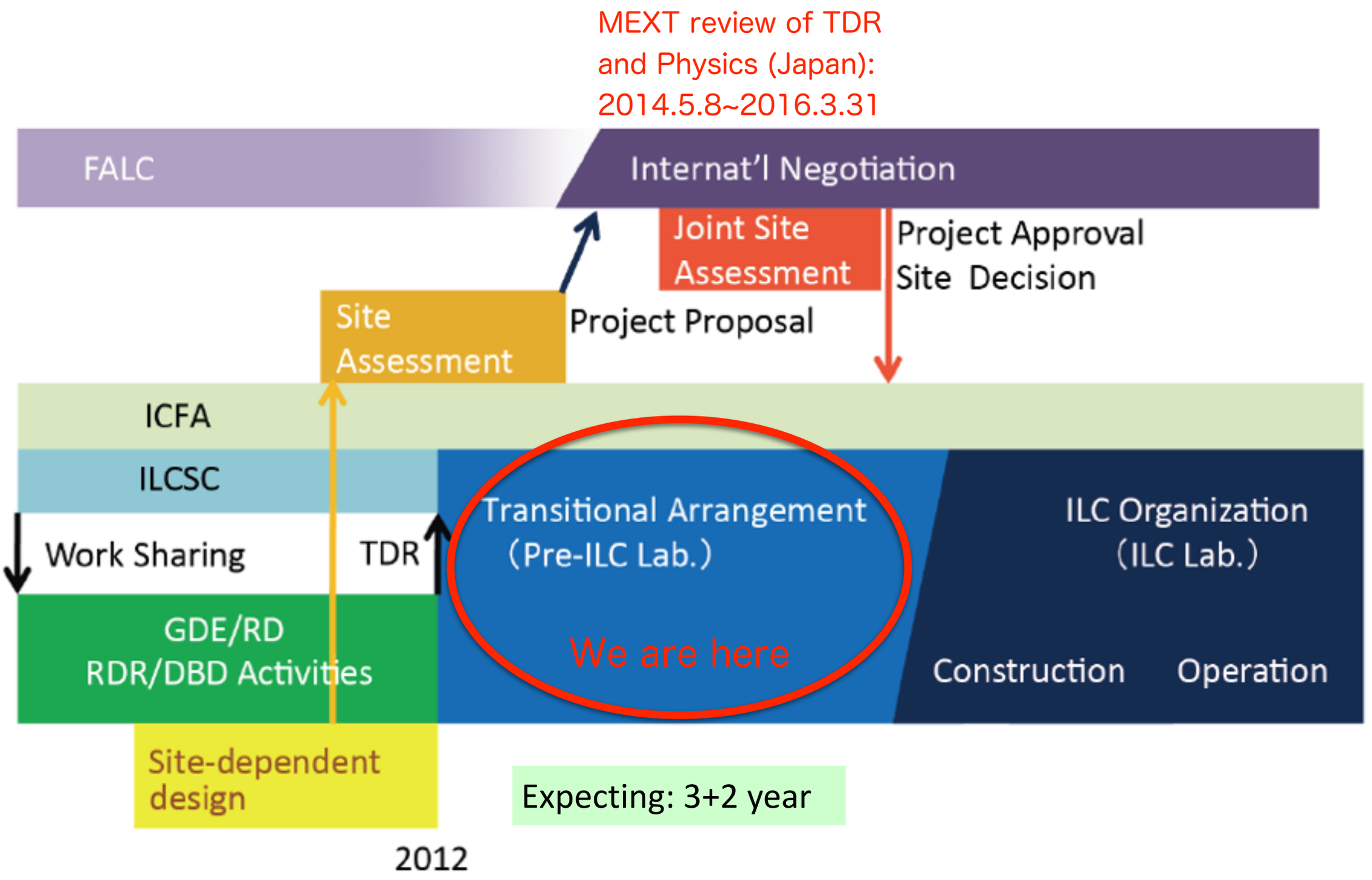

A.Yamamoto, April 2014, modified by T.Tauchi

LCC-ILC Accelerator Organization

Major Task: Fix technical design parameters to be optimized, and reflect them to CFS design optimization, within a few years.

LCC-ILC Director: M.Harrison, Deputies: N.Walker and H.Hayano *KEK LC Project Office Head: A.Yamamoto

Sub-Group	Global Leader Deputy/Contact p.	KEK-Leader* Deputy	Sub-Group	Global Leader Deputy/Contact Persons	KEK-Leader* Deputy
Acc. Design Integr.	N. Walker (DESY) K. Yokoya(KEK)	K. Yokoya	SRF	H. Hayano (KEK) C. Ginsburg (Fermi), E. Montesinos (CERN)	H. Hayano Y. Yamamoto
Sources (e-, e+)	W. Gai (ANL) M. Kuriki (Hiroshima U.)	J. Urakawa T. Omori	RF Power & Cntl	S. Michizono (KEK) TBD (AMs , EU)	Michizono T. Matsumoto
Damping Ring	D. Rubin (Cornell) N. Terunuma(KEK)	N. Terunuma	Cryogenics w/ HP gas issues	H. Nakai: KEK T. Peterson (Fermi), D. Delikaris (CERN)	H. Nakai T. Okamura
RTML	S. Kuroda (KEK) A. Latina (CERN)	S. Kuroda	CFS	A. Enomoto (KEK) V. Kuchler (Fermi), J. Osborne (CERN),	A. Enomoto M. Miyahara
Main Linac w/ B. Compr. B. Dynamics	N. Solyak (Fermi) K. Kubo (KEK)	K. Kubo	Radiation Safety	T. Sanami (KEK) TBD (AMs, EU)	T. Sanami T. Sanuki
BDS	G. White (SLAC), R. Tomas (Cern) T. Okugi(KEK)	T. Okugi	Electrical Support (Power Supply etc.)	TBD	TBD
MDI	K. Buesser (DESY) T. Tauchi (KEK)	T. Tauchi Y.Sugimoto	Mechanical S. (Vac. & others)	TBD	TBD
			Domestic Program, Hub Lab. Facilities	TBD	H. Hayano T. Saeki

MDI/CFS : Weekly meetings of ILC Detector Hall/CFS and CFS liaison

A.Yamamoto, April 2014, modified by T.Tauchi

ILC Layout in the TDR

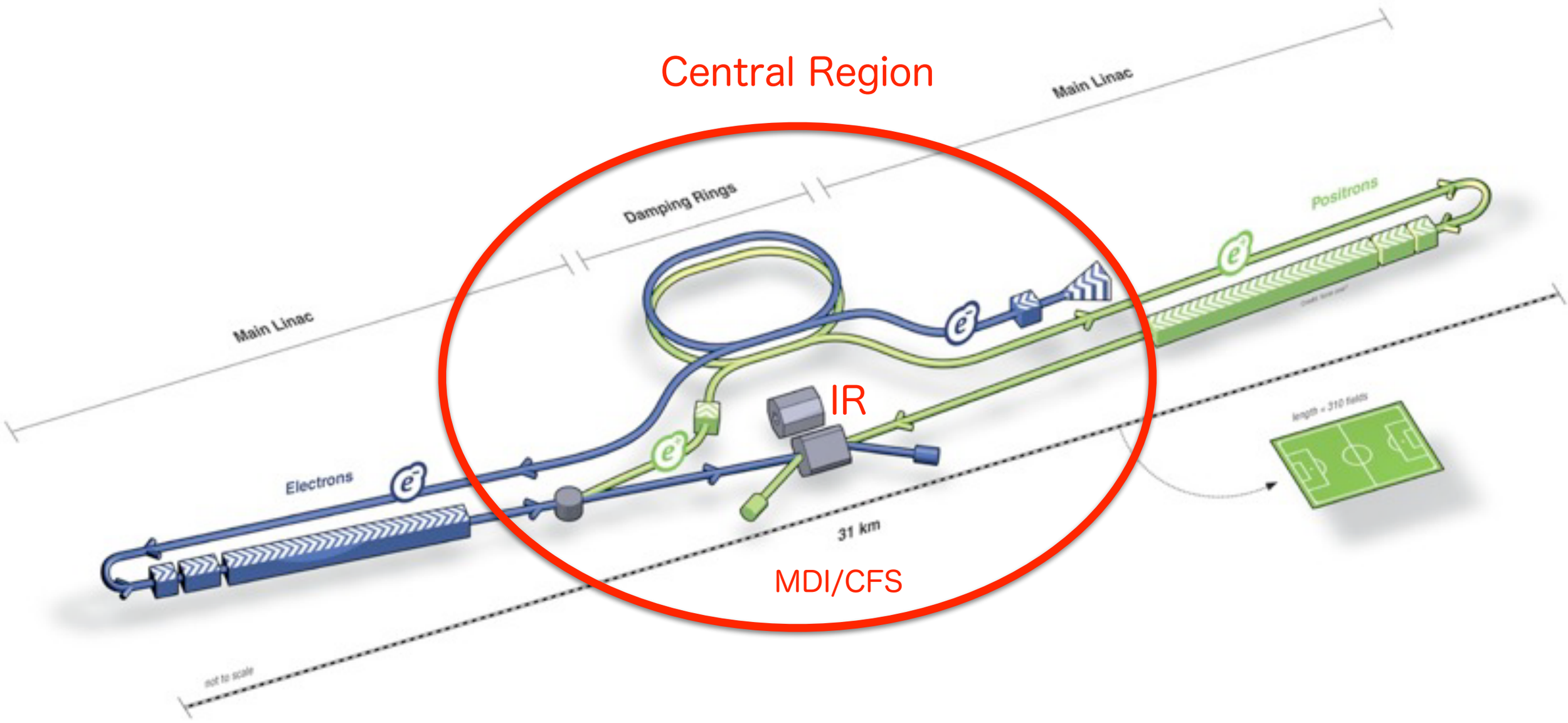

ILC Candidate Location: Kitakami Area

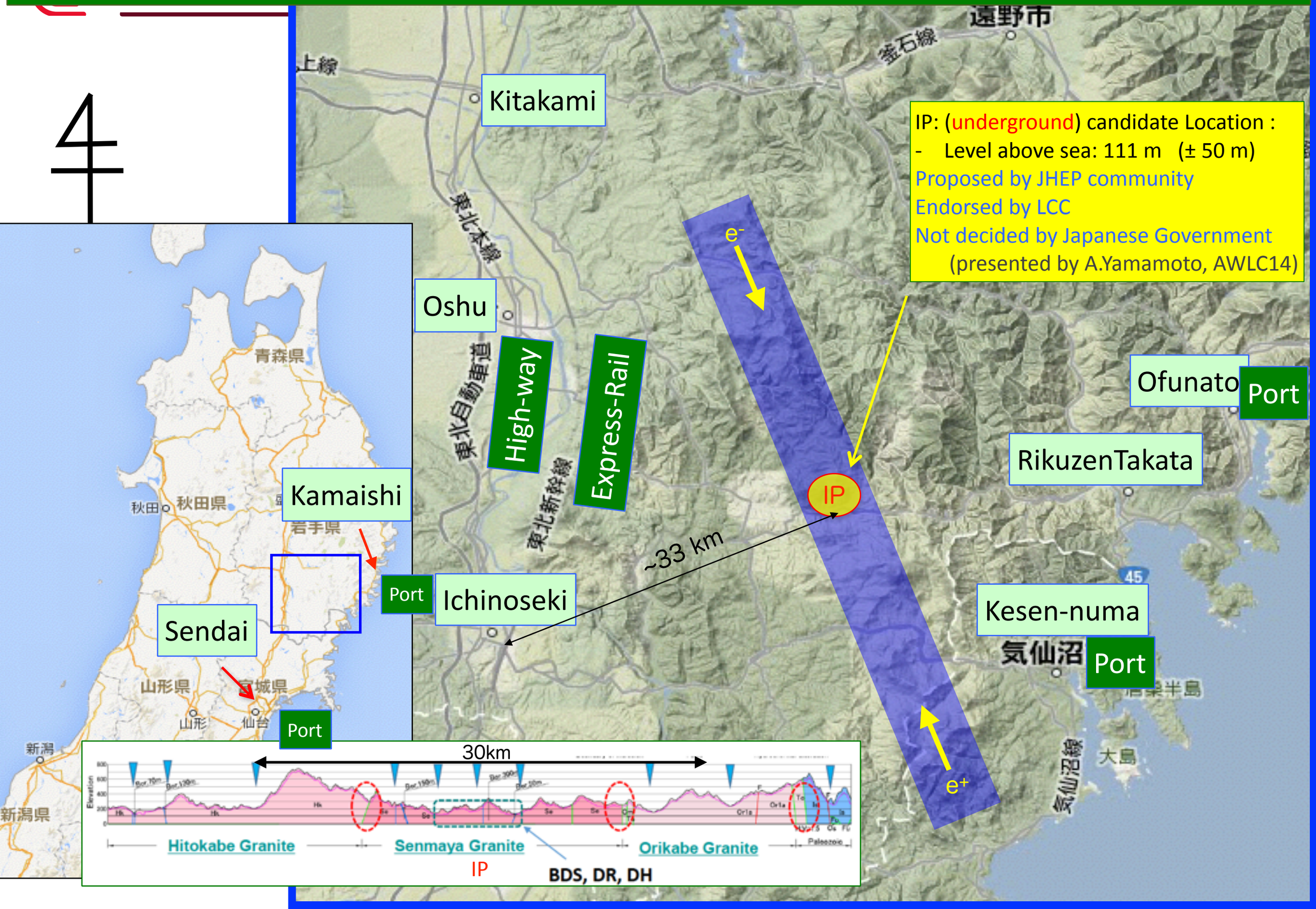

IP Region

Geological feature

- **KITAKAMI site has good Geological conditions for tunneling and machine stability.**

Findings

- **Distribution of the hard bedrock by length more than 50 kilometers.**
- **No active fault zones along the ILC route area.**
- **Low seismic noise of constantly.**

Depth of decomposed granite soil (boring survey) ?

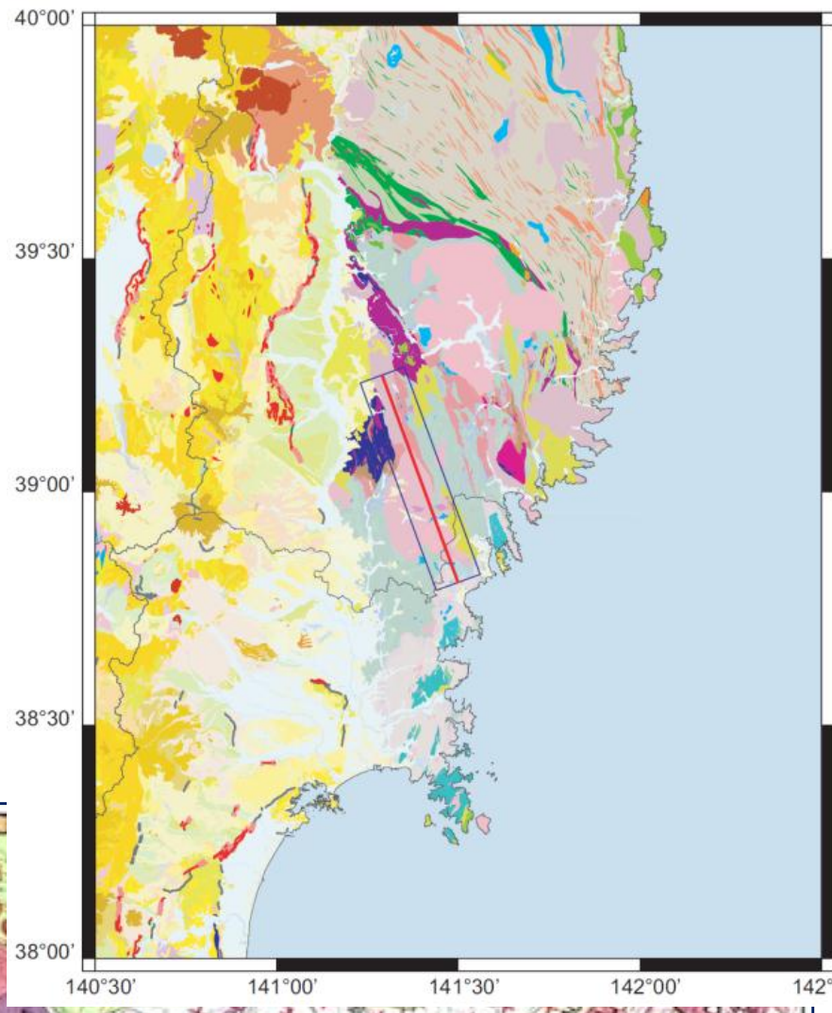

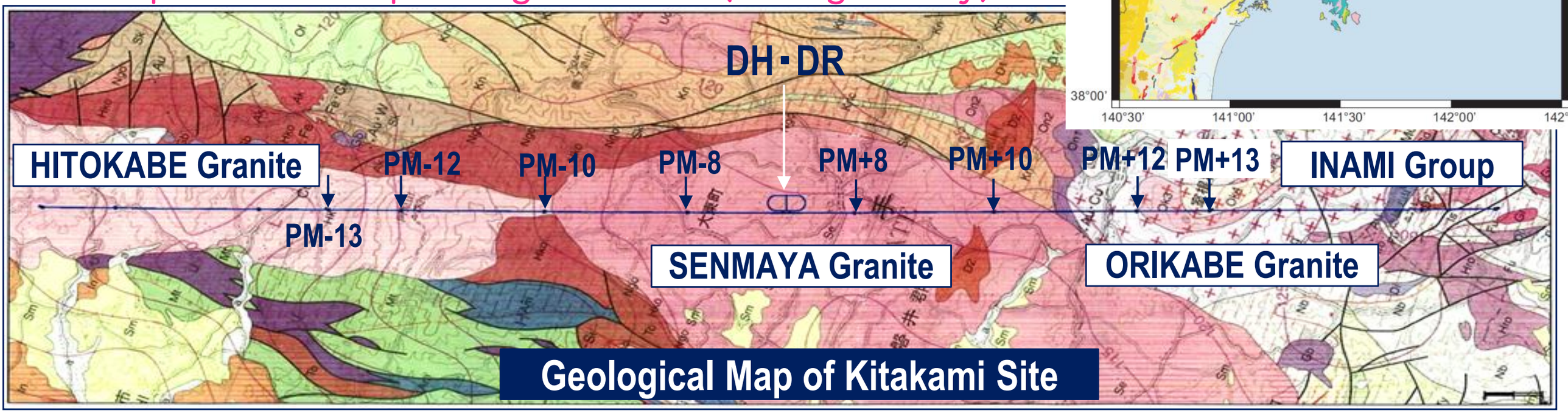

Timeline of ILD assembly

- Assembly Hall will be completed in 2 years since the ground-breaking ceremony.
- Timelines of assembly on site before the underground installation to be updated

ILD assembly timeline for Hybrid option (CMS style assembly))

Sub-detector	Y-3	Y-2	Y-1	Y1	Y2	Y3	Y4	Y5	Y6	Y7	Y8	Y9	Y10
	Q1 Q2 Q3 Q4	Q1 Q2 Q3 Q4	Q1 Q2 Q3 Q4	Q1 Q2 Q3 Q4	Q1 Q2 Q3 Q4	Q1 Q2 Q3 Q4	Q1 Q2 Q3 Q4	Q1 Q2 Q3 Q4	Q1 Q2 Q3 Q4	Q1 Q2 Q3 Q4	Q1 Q2 Q3 Q4	Q1 Q2 Q3 Q4	Q1 Q2 Q3 Q4
Detector Hall				Excavation/Utilities									
Assembly Hall		Platform?		Construction	?				Extention				
VTX				TDR	Construction off site					Assembly on site	Ins	Detector commissioning	Accelerator commissioning
SIT				TDR	Construction off site					Assembly on site	Ins		
FTD				TDR	Construction off site					Assembly on site	Ins		
TPC		TDR			Construction off site					Assembly on site	Ins		
FCAL		TDR			Construction off site					Assembly on site	Ins		
ECAL (Barrel)		TDR			Construction off site			Ass. On site	Install				
ECAL (End cap)		TDR			Construction off site		Ass. On site	Install					
HCAL (Barrel)		TDR			Construction off site			Ass. On site	Install				
HCAL (End cap)		TDR			Construction off site		Ass. On site	Install					
Coil		TDR	Bid	Modules construction off site	Modules const. off site/assembly on site			Ins	?	FM	Detector lowering		
Iron Yoke		TDR	Bid	Modules construction off site	Modules construction off site/ring assembly on site								
Muon det		TDR			Construction off site		Ass. On site	Install					
DAQ				TDR	Construction off site			Assembly on site		Commissioning		Operation	
Computing/software						TDR	Bid	Delivery on site		Operation			
Physics	Simulation					TDR		Simulation					Analysis

Ground-breaking

Ins: Install

FM: Field mapping

Y. Sugimoto,ILC Detector Hall/CFS meeting, 9 July, 2014

DR schedule of construction and commissioning (TDR)

The Gantt chart in Fig. 14.7 shows that the DR and PLTR should be ready for early commissioning by Y7 Q1. This means that by the time the BDS and ML become available for early commissioning, the DR and PLTR should also be ready. The commissioning exercise would then start by Y7 Q2.

ID	Task Name	Duration
1	**DR and PLTR construction**	**1850.5 days**
2	Excavate PMA0 and PMBo	52 wks
3	Excavate DR caverns	40 wks
4	Setup TBM	15 wks
5	Excavate DR	21.6 wks
6	Excavate PLTR	18 wks
7	Invert and finishing for DR and PLTR	15 wks
8	Install ceiling partitions (DR PLTR)	15 wks
9	Survey + supports setout	31.5 wks
10	Electrics	45 wks
11	Piping and ventilation	45 wks
12	Cabling	45 wks
13	Supports installation	15 wks
14	Machine installation	70 wks
15	DR and PLTR ready for commissioning	0 days
16	BDS ready for commissioning	0 days
17	e- injector system to 5GeV and dump	13 wks
18	e+ source and systems to 5GeV and dump	13 wks
19	Hardware commissioning of injection lines and DR	13 wks
20	Commissioning with beam of DR	39 wks
21	Early commissioning complete	0 days

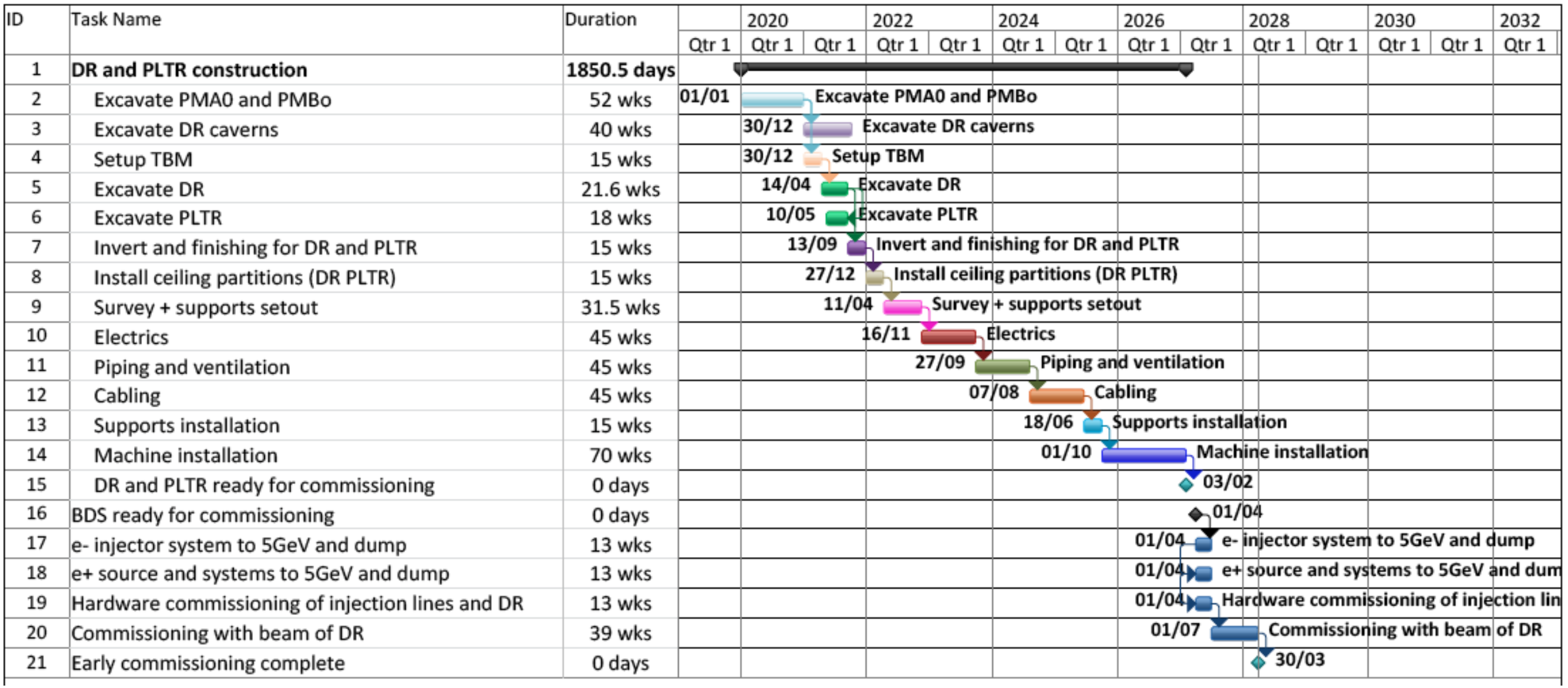

Figure 14.7. Draft schedule for delivery of DR and PLTR for commissioning

Hybrid Access Optional Study

	Baseline (TDR)	Hybrid A´(Revision)
Conceptual Image	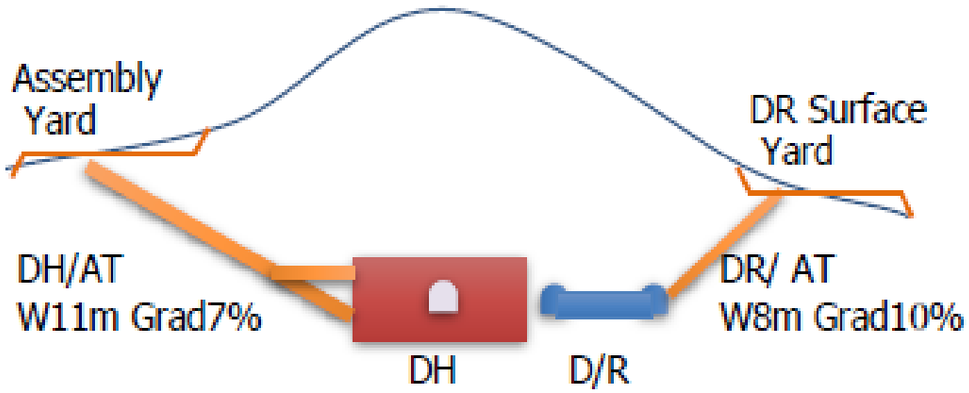	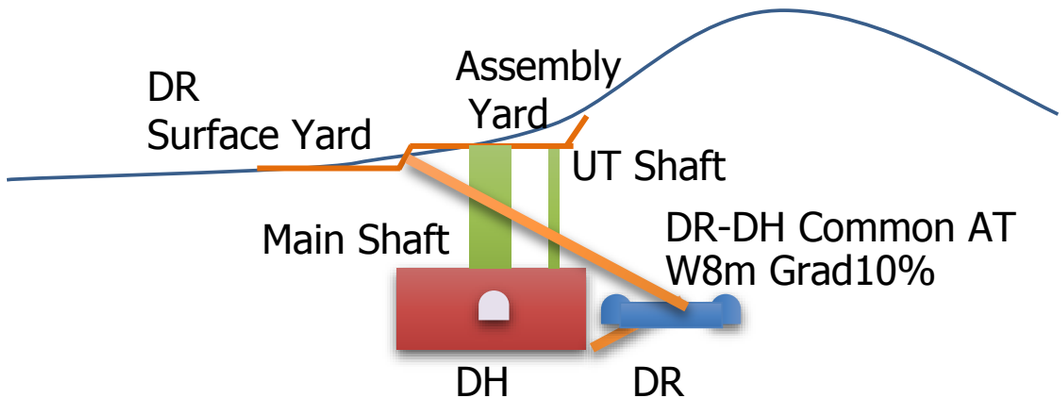
Detector H	L=142m*D25m*H42m	L108m*D25m*H42m
Installation Method	Access Tunnel (W8m*H7.5m)	Vertical Shaft (D18m) +AT(DR,W8m*H7.5m)
	Special Carrier (200 t)	Gantry Crane (4,000t?)+Trailer
Utility Access	Access Tunnel (Common use) Common use with Detector-install	Vertical shaft (D10m) With EV shaft
Cost Estimate	100 (Baseline)	?? Under study

Baseline

- One Access Tunnel

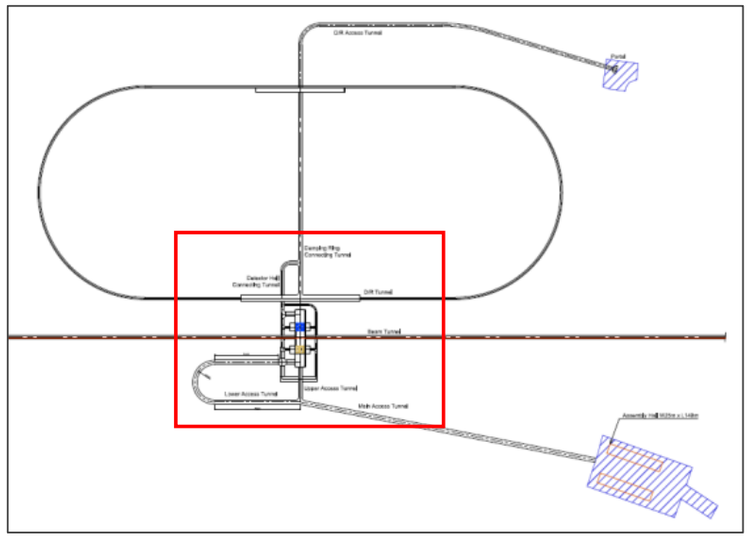

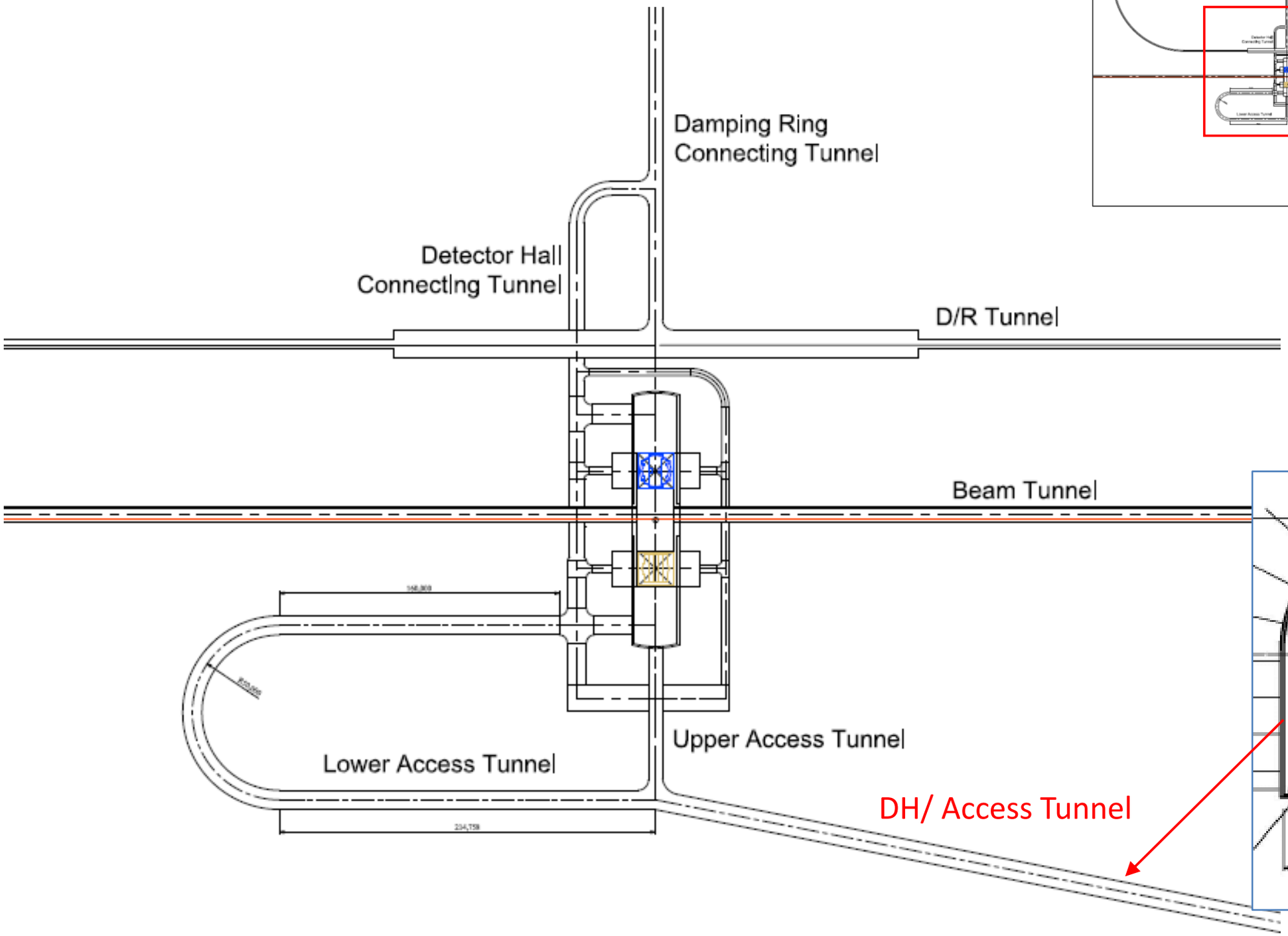

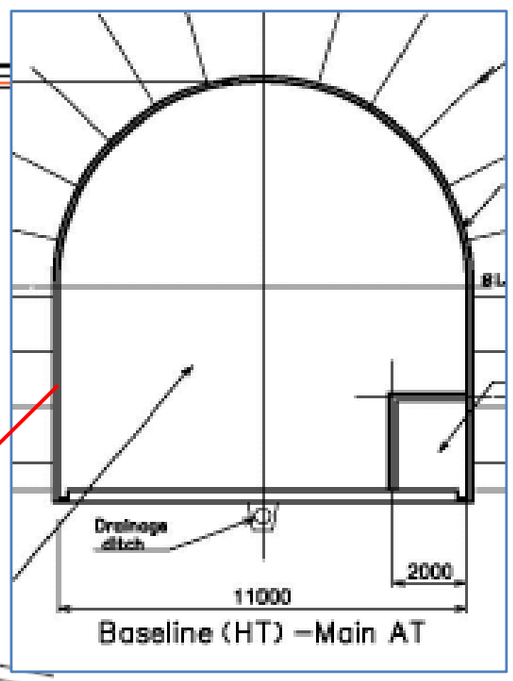

Hybrid – A´ Revision

- One Vertical Shaft
- One Access Tunnel
  (for DH/DR)

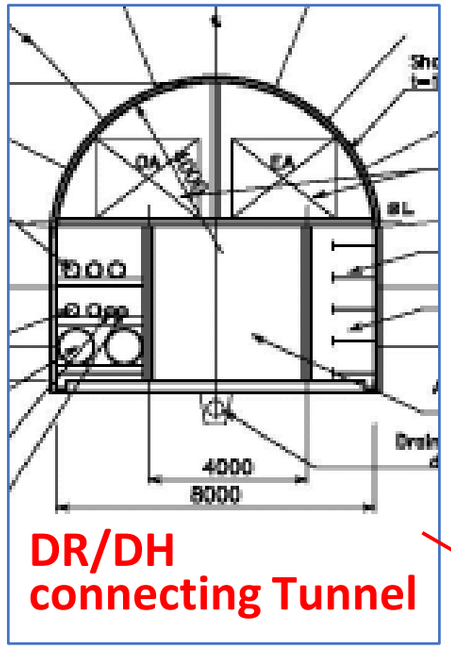

DR/DH connecting Tunnel

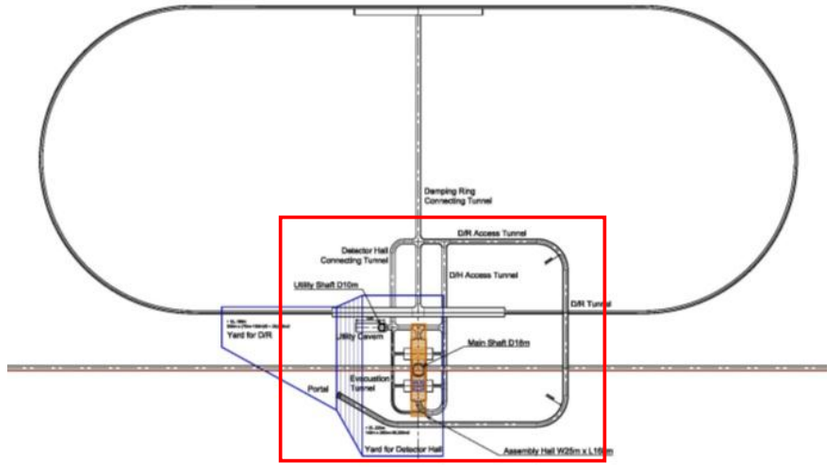

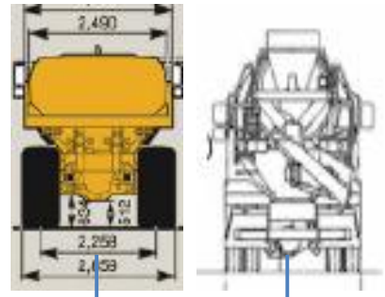

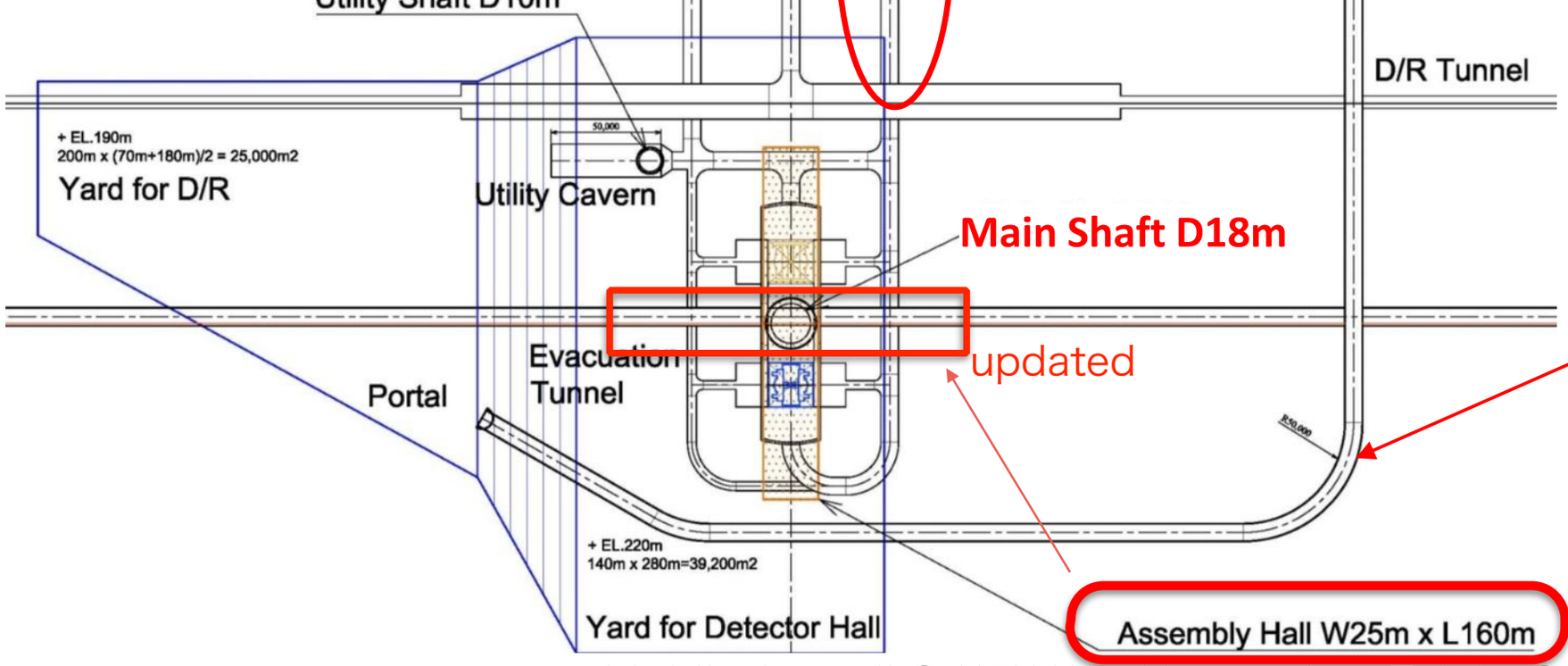

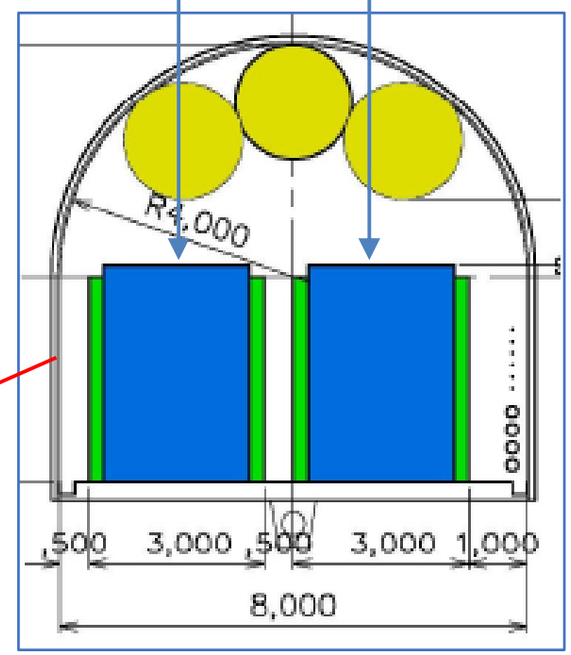

DR/DH Access Tunnel

Main Shaft

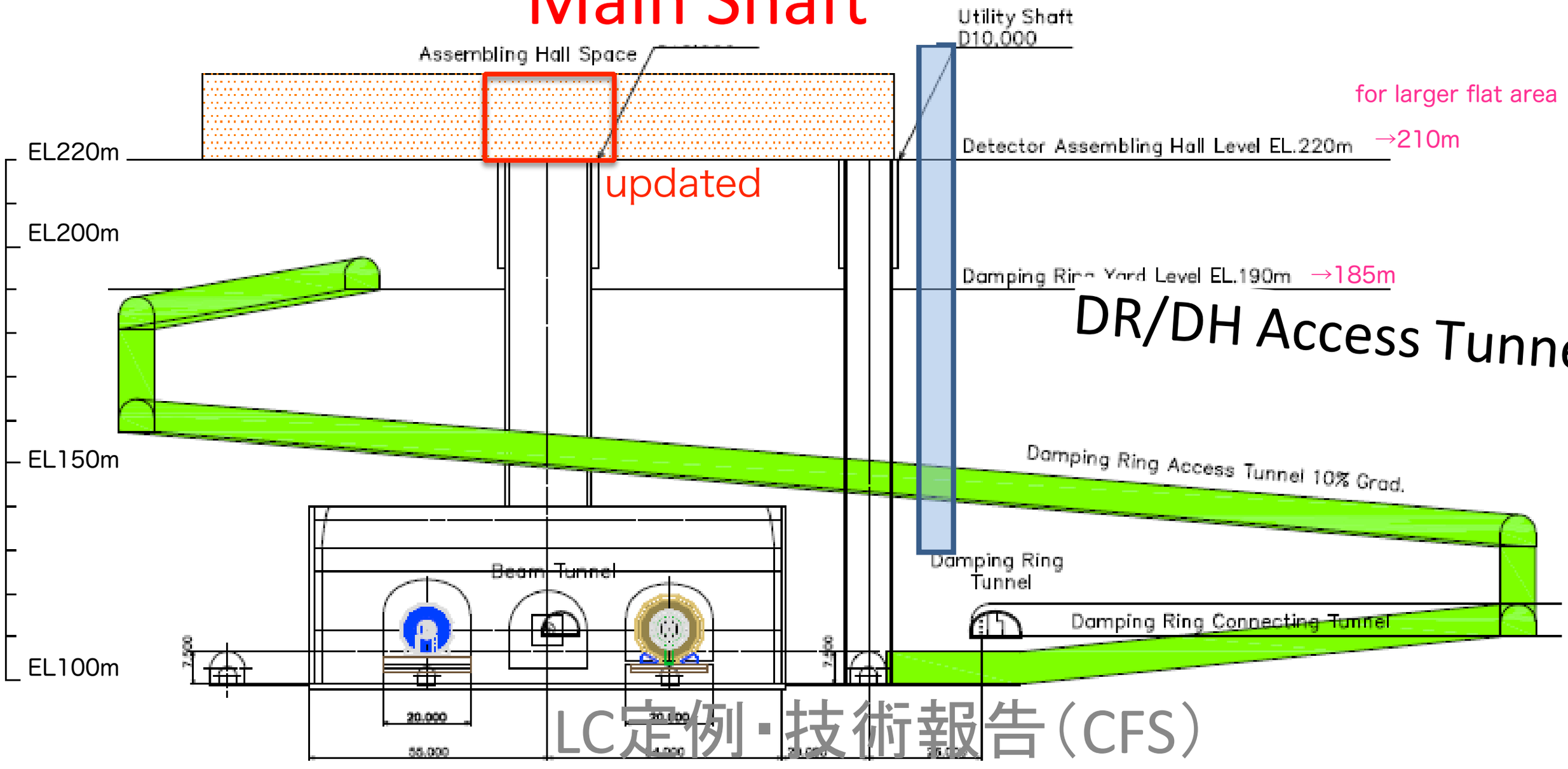

LC定例・技術報告（CFS）

Underground

Detector hall: floor plan & utility space

Update :Cold boxes for SiD and ILD installed on the platforms

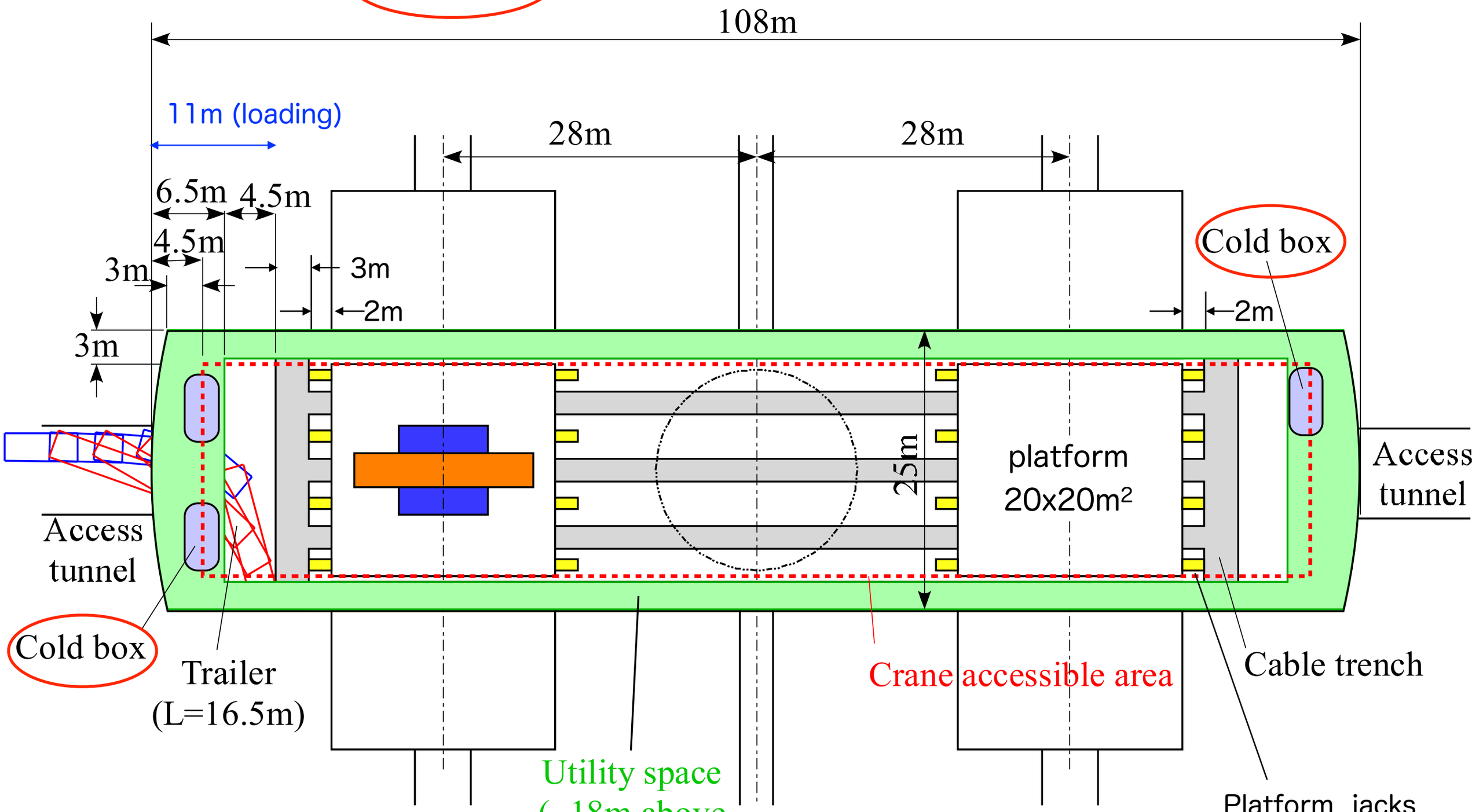

Y. Sugimoto, 24 July, 2014

Land surface

Consideration with respect to land use

Assembly Hall Option

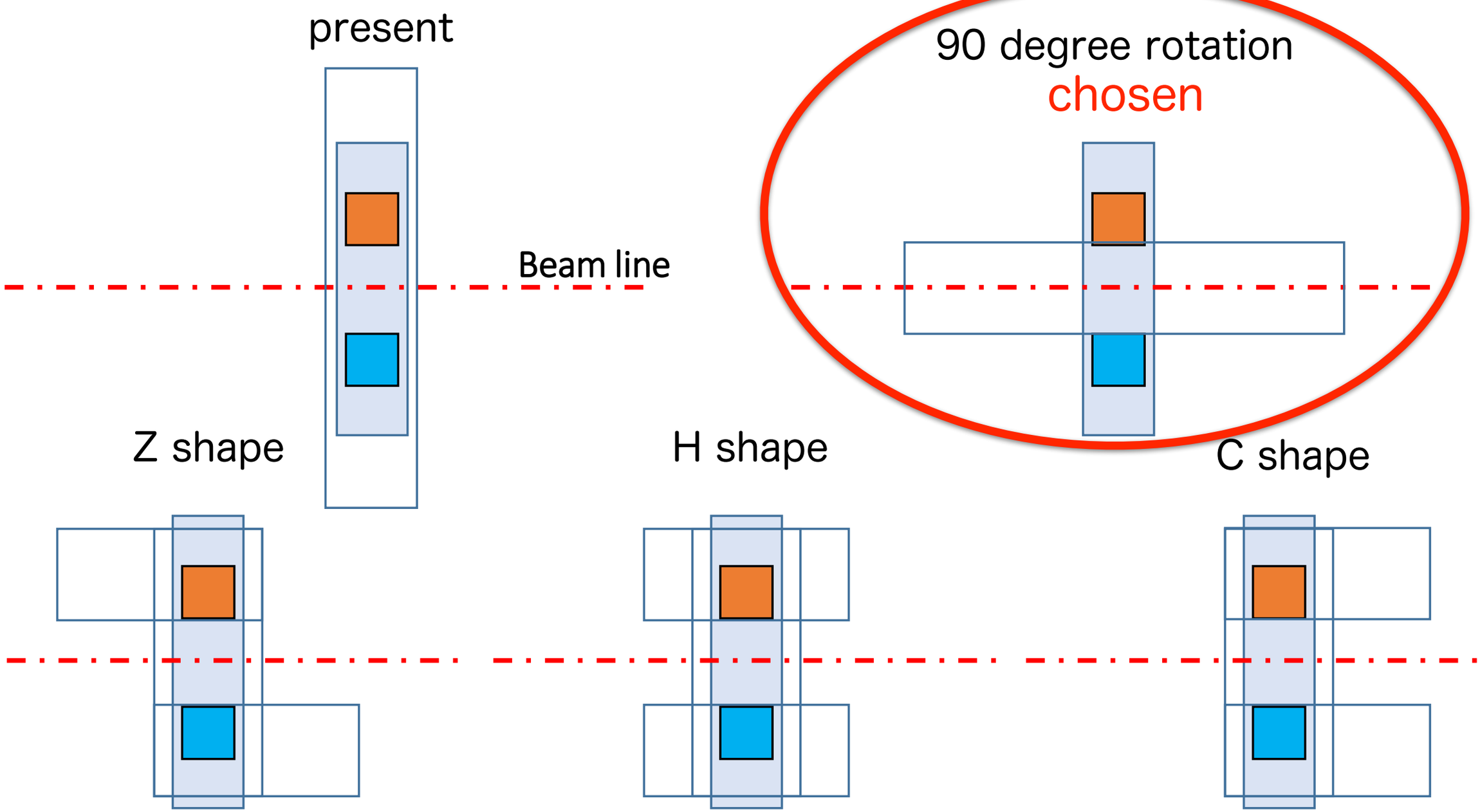

Land use → H or C shapes ?

M. Miyahara, ILC-KEK Weekly meeting, 7 July, 2014

Size of Assembly hall : W25m x L160m ?

ILD : Lowering order

- YE- → YB- → YB0 → YB+ → YE+ seems OK as Marco pointed out
- No need for an alcove for assembly hall from the view point of detector lowering
- But we have to check if YB0 with cryogenic system can fit in the underground alcove
  - Probably no space for overhead crane in the alcove
  - Small crawler crane through access tunnel connected to the alcove, if necessary

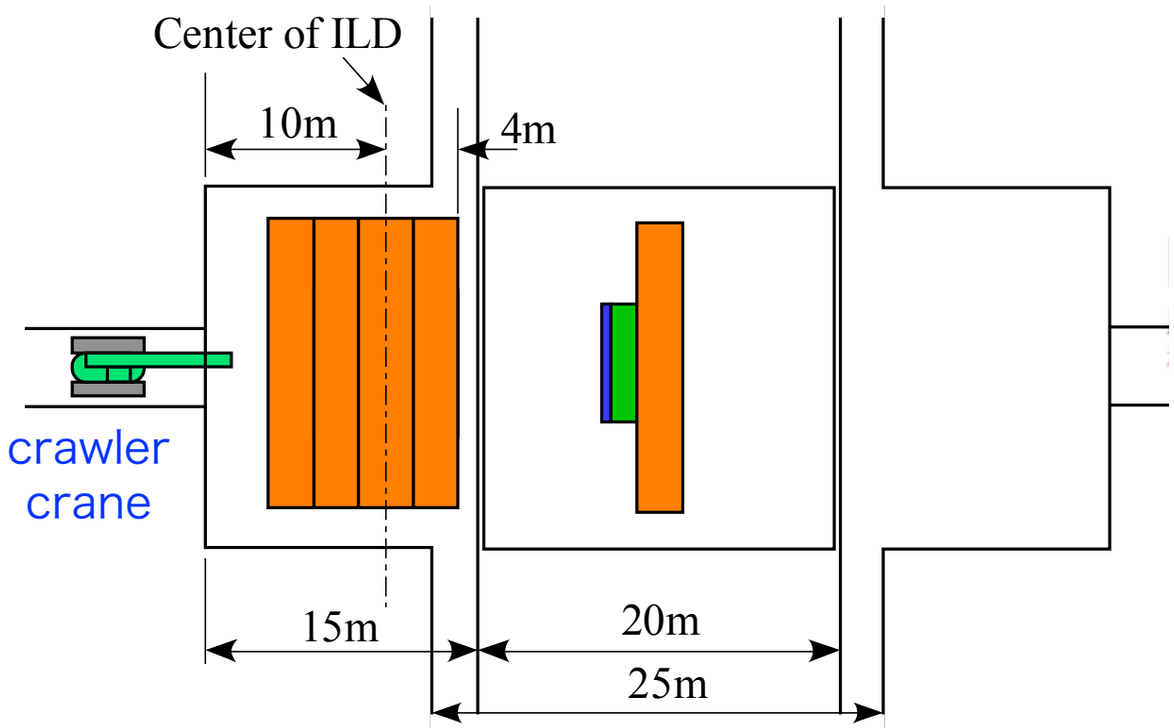

Underground Detector Hall

4.9ton, 15.4m crawler crane

Outline dimensional drawing (mm, CK90UR,CK120UR)

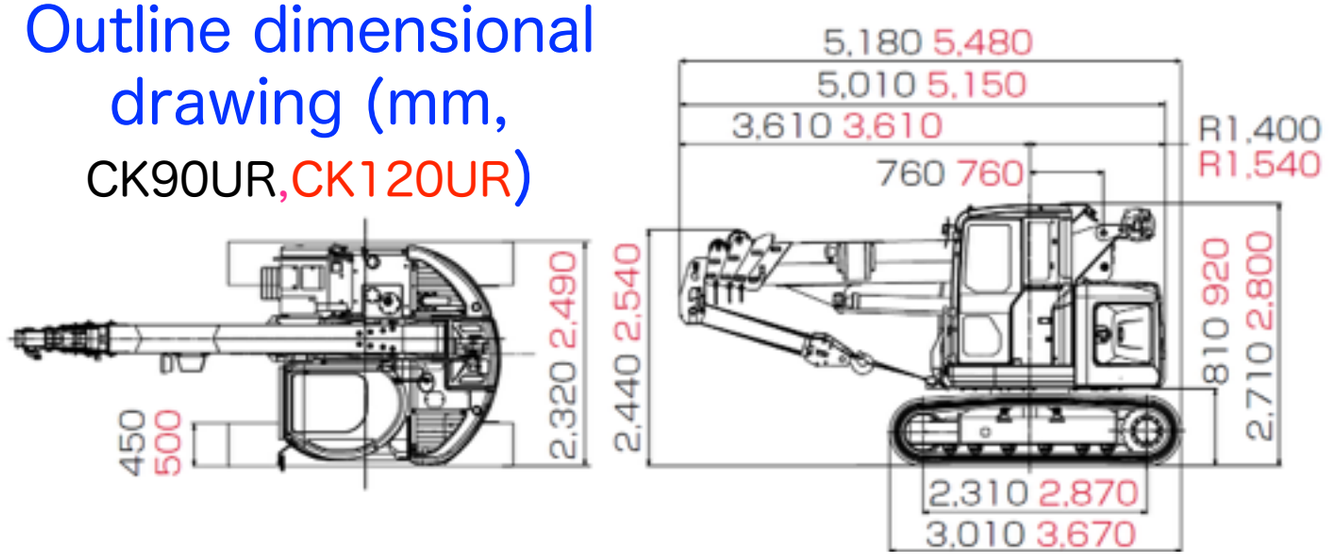

Assembly order on surface

Without alcoves

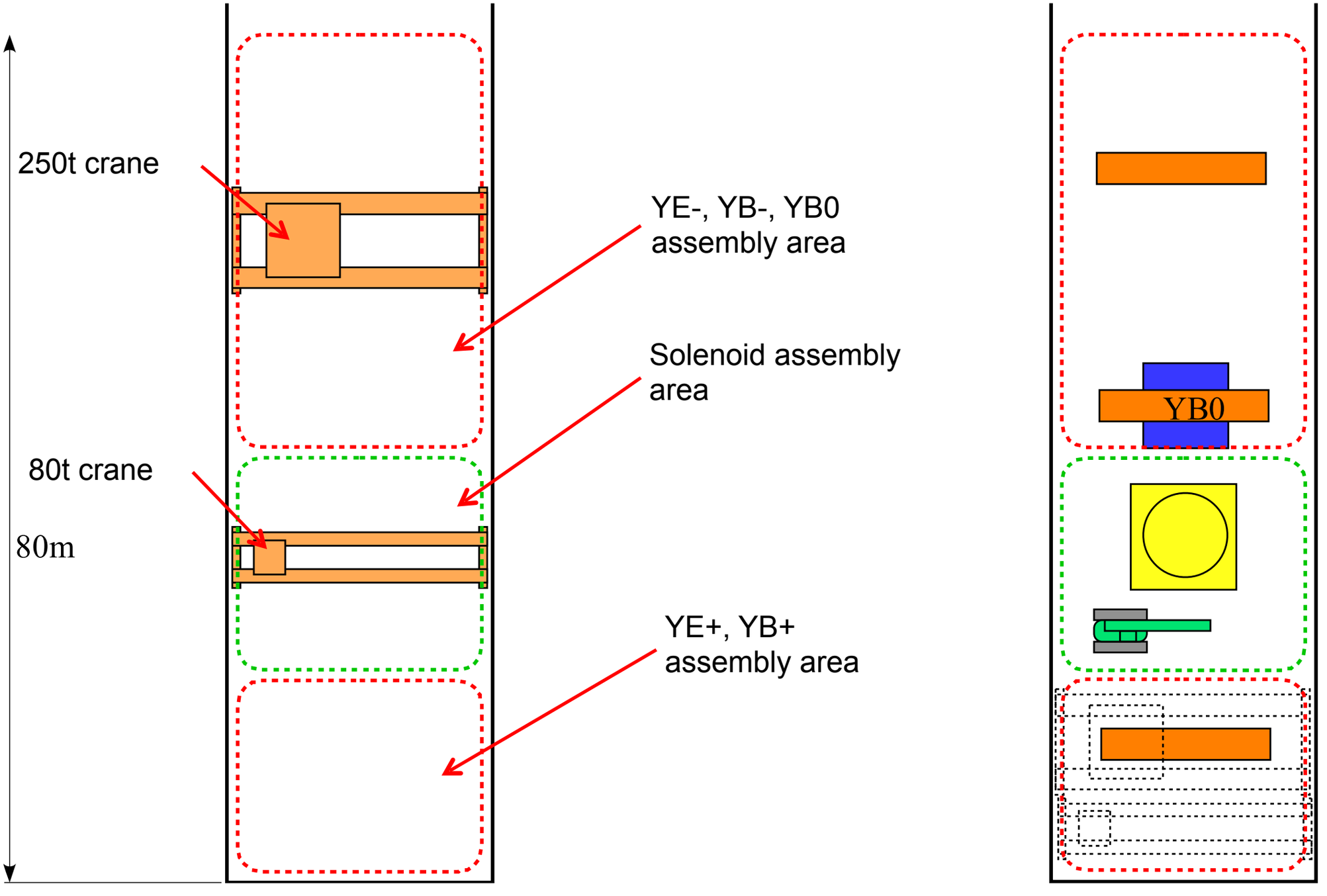

80t crane has no task at this stage

Assembly order on surface

With alcoves

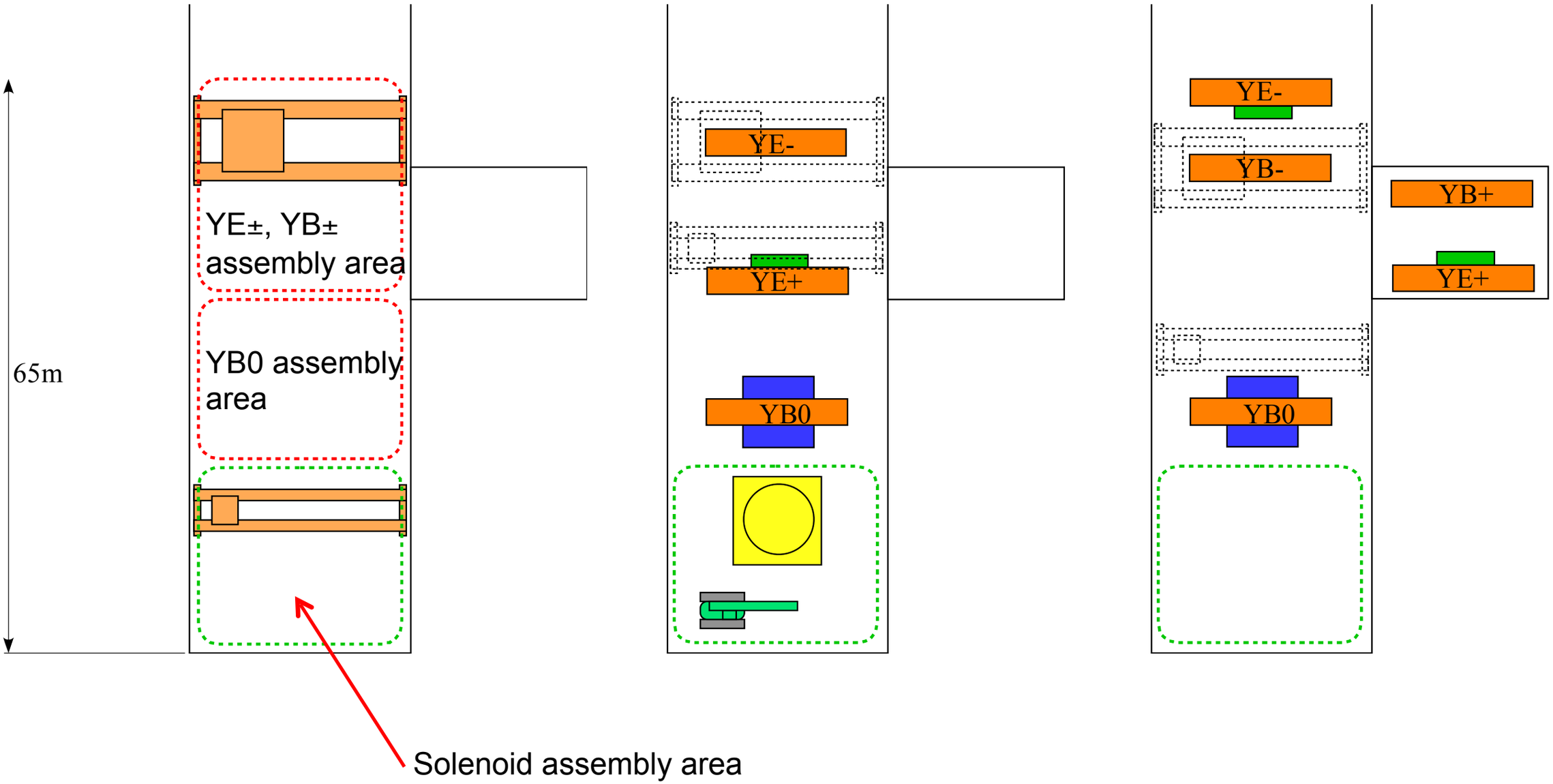

Main LINAC

ILC Cryogenics Component Location Proposed

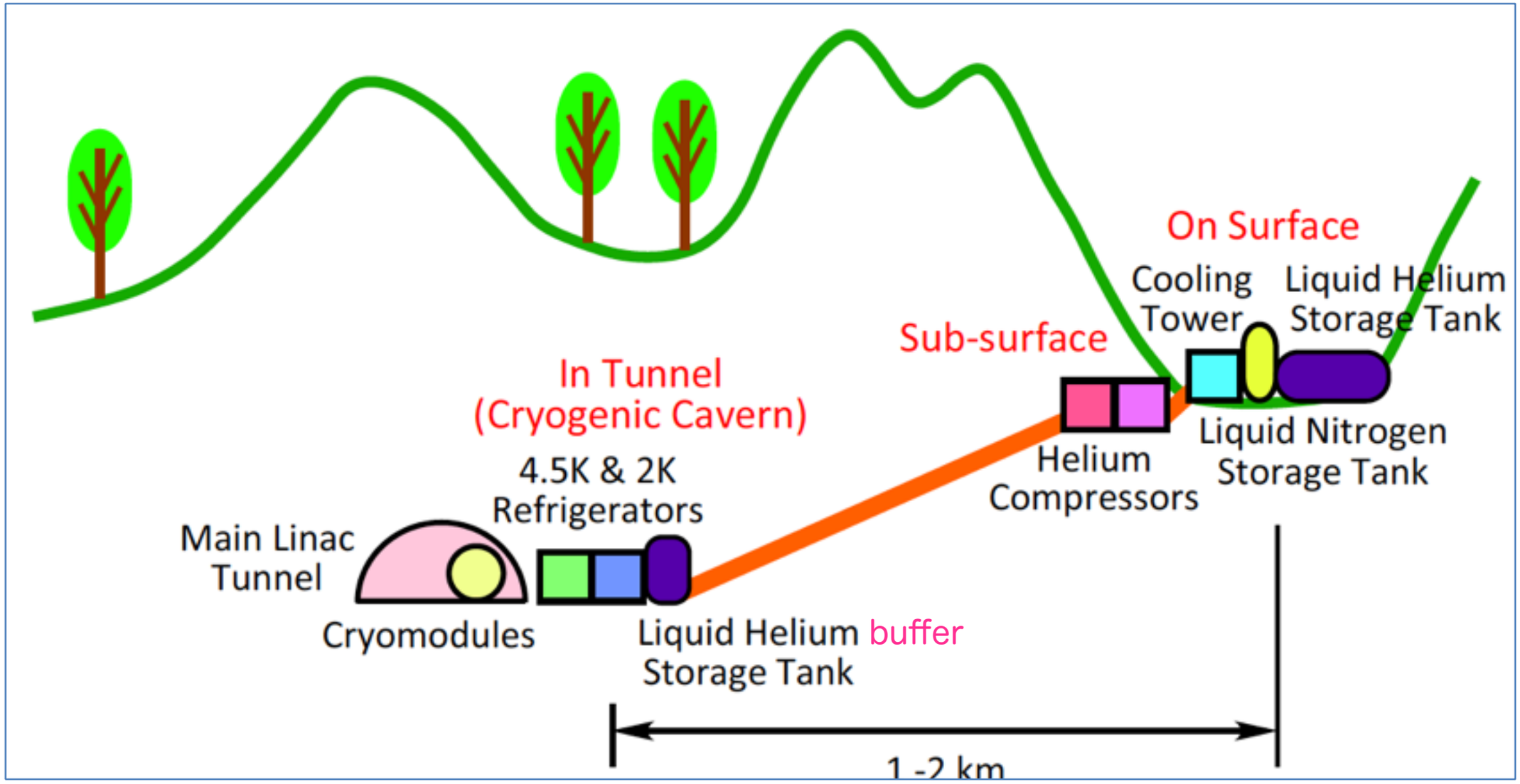

H. Nakai, Mini-workshop on the ILC cryogenics and He inventory, CERN,18-19 June, 2014

- **Accelerator and Detector Cryogenics at IP**
  - IP region cryogenics for detectors and accelerator, the compressor station may be unified, and the cold box locations may be optimized dedicated depending on the operational features and cold-mass inertia.
- **Energy Efficiency**
  - It may be important to innovate efficient ways of using thermal energy from compressors operation, according to "Green energy" concept.
- **Safety**
  - Safety condition at underground cavern may become much relaxed, based on the consideration above, although the safety condition remain unchanged in accelerator tunnel

Schematic diagram for IR cryogenics (1)

Layout of IR crygenics including DR is shown below.

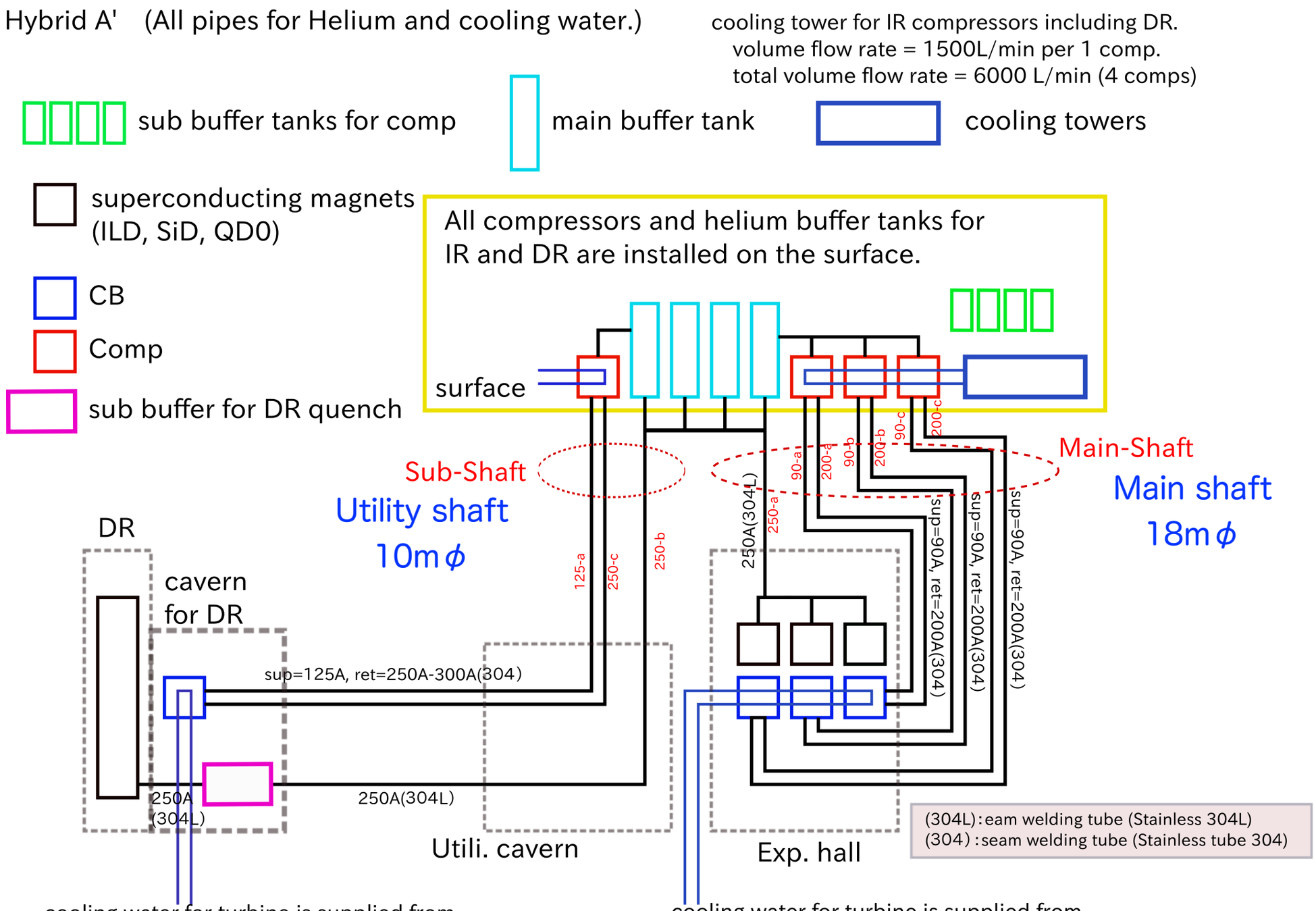

cooling water for turbine is supplied from cooling water system located in the underground
100L/min per one CB.
Inlet temp = 31 deg.

cooling water for turbine is supplied from cooling water system located in the underground
100L/min per one CB.
Inlet temp = 31 deg.

Yard size example on the surface

Surface cryogenics system for IR & DR

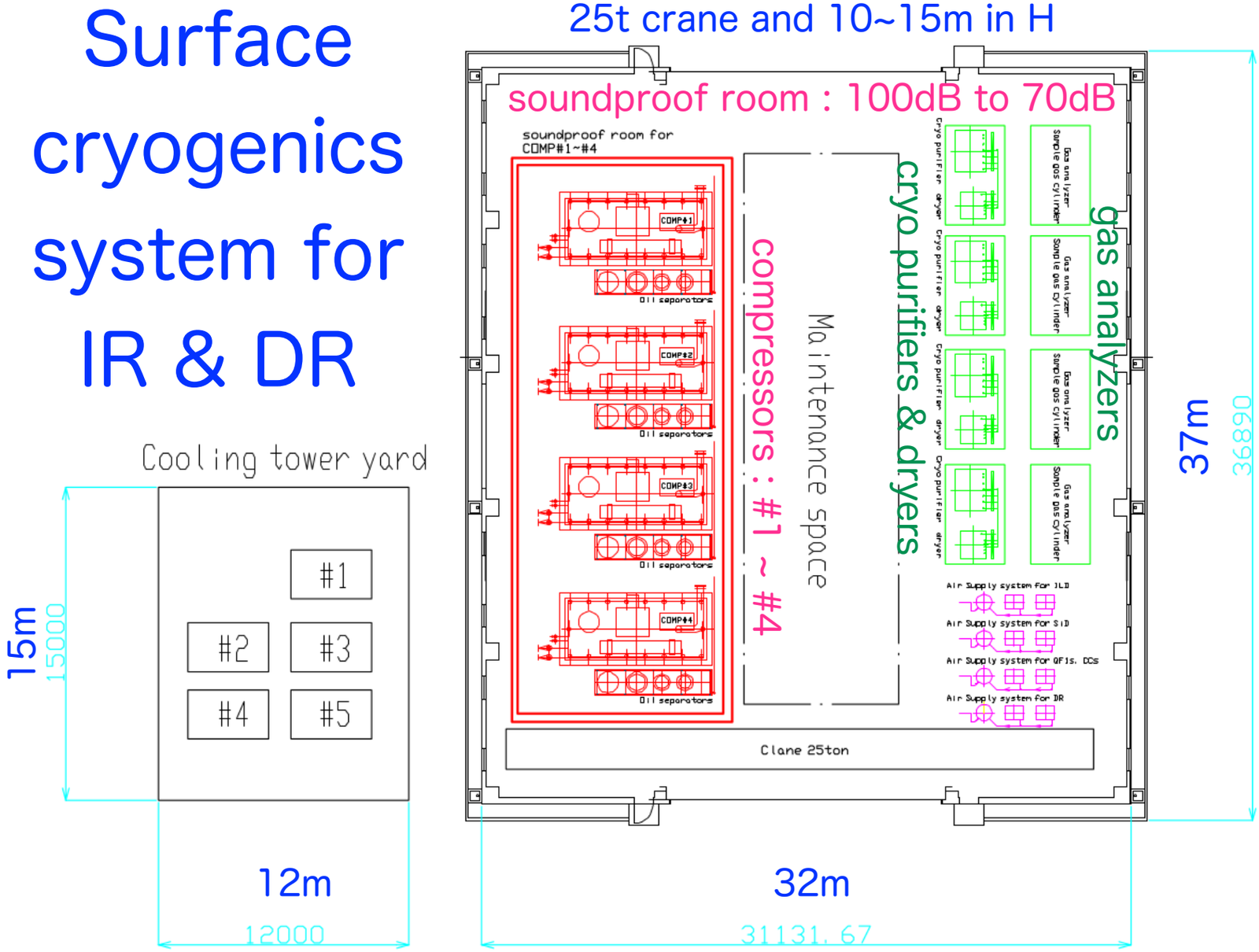

Compressor: main specification

- COMP #1 : for ILD+QDOs (500 kW)
- COMP #2 : for SiD+QDOs (500 kW)
- COMP #3 : for QF1s, CCs (300 kW)
- COMP #4 : for DR (600 kW?)

Total Cooling water for each compressor

- COMP #1 : 1700 L/min (cooling tower #1
- COMP #2 : 1700 L/min (cooling tower #2
- COMP #3 : 1000 L/min (cooling tower #3
- COMP #4 : 2000 L/min (cooling tower #4

Cooling tower #5 is for other equipmen

- Cooling tower yard had better be located near the compressor house.
- Liquid nitrogen tank of around $\sim$ 5000 L had better be employed for cryogenic purifier and compressor maintenance.

Transportation

■ Port facilities, railway, highway

Cryomodule

Detector

International Marine Container(45F)

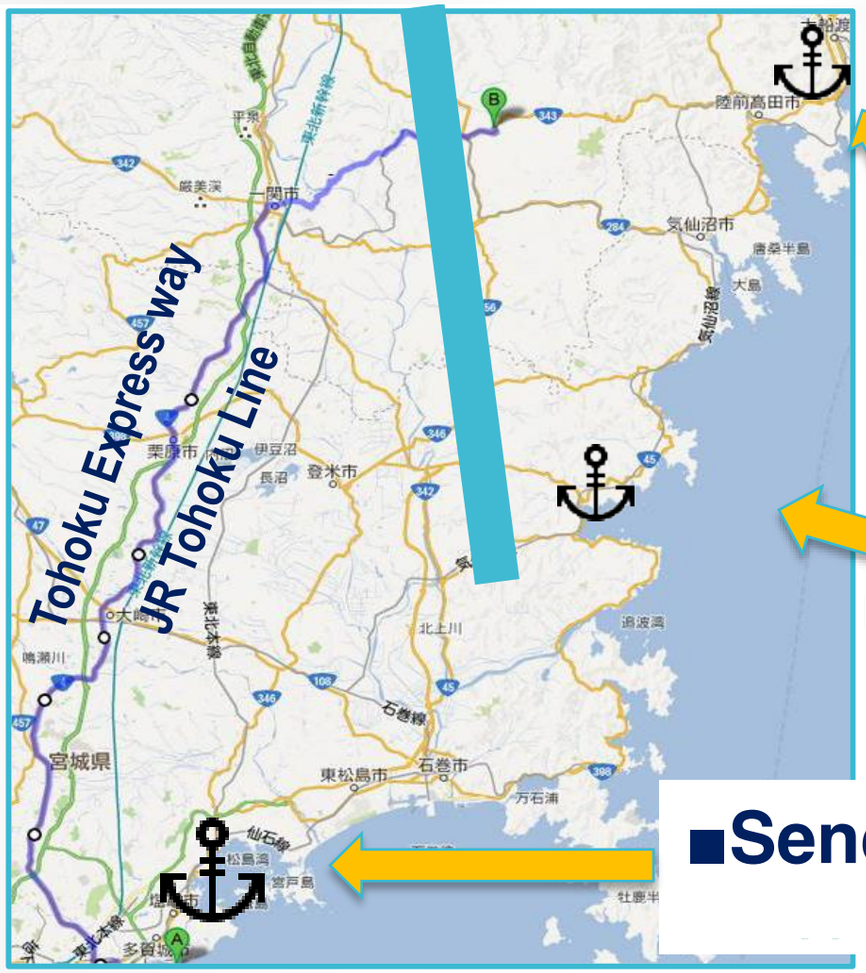

□ Transport object

Object	W(m)	L(m)	H(m)	W(t)
Return York	2.0	2.0	2.0	50
Solenoid coil	6.2	6.2	2.8	65
TPC	4.0	5.0	4.0	2
Cryomodule	1.0	15.0	1.0	10

□ Overview of the neighboring port facilities

Port name	Facility	Depth(m)	Ship scale	Unloading machine
Kamaishi	Quay	-11.0	18,000 D/W	30.5t(Rating load)
Ofunato	Quay	-13.0	40,000 D/W	51.6t/45.0t
Kesennuma	Quay	-7.5	5,000 D/W	None
Sendai	Quay	-14.0	50,000 D/W	56.2t/40.6t/36.0t

ILD Barrel Yoke Segment

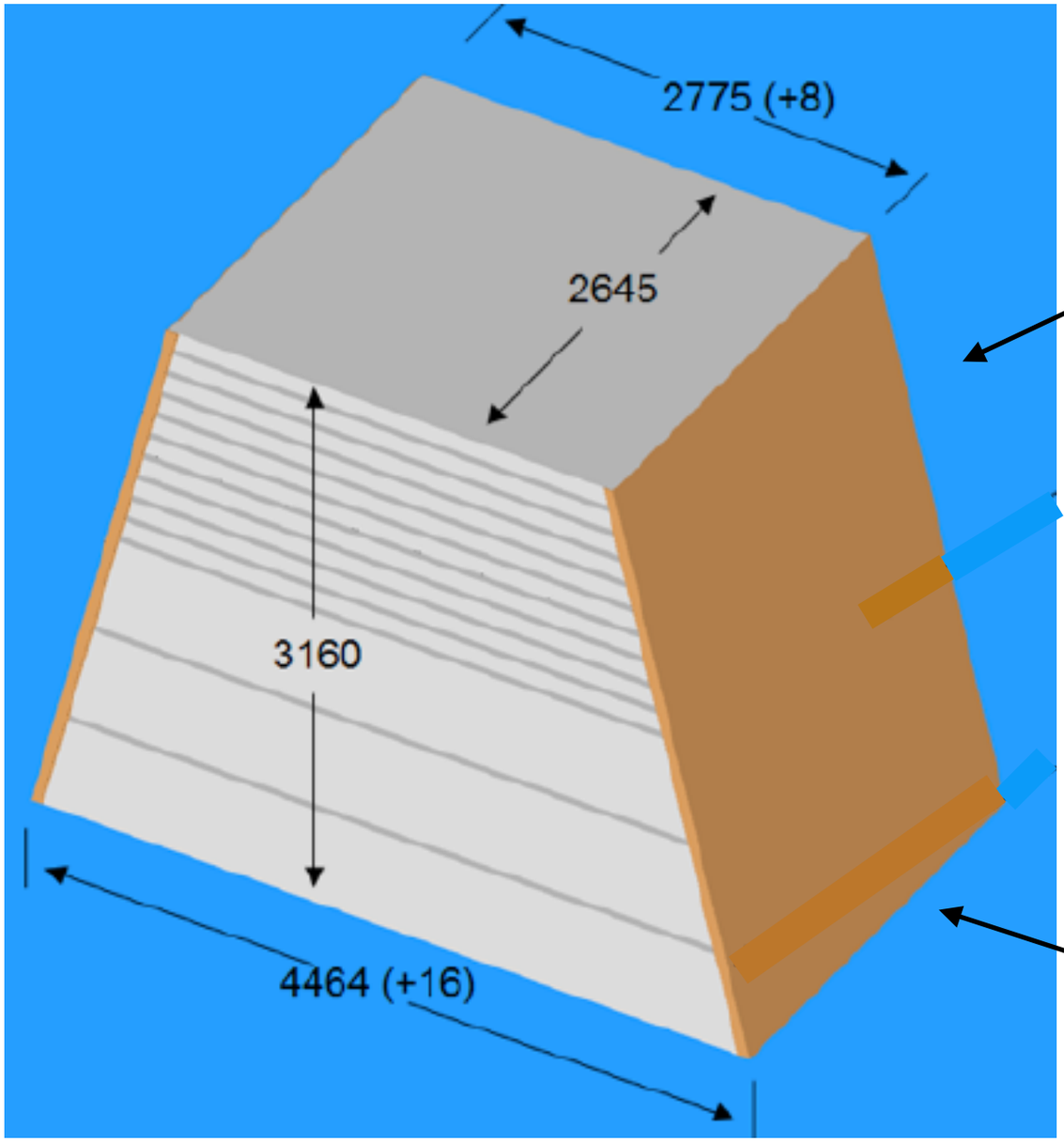

Weight ~210t
18 pieces
18=6x3ring
Plus 18 slightly smaller pieces
weight ~170t

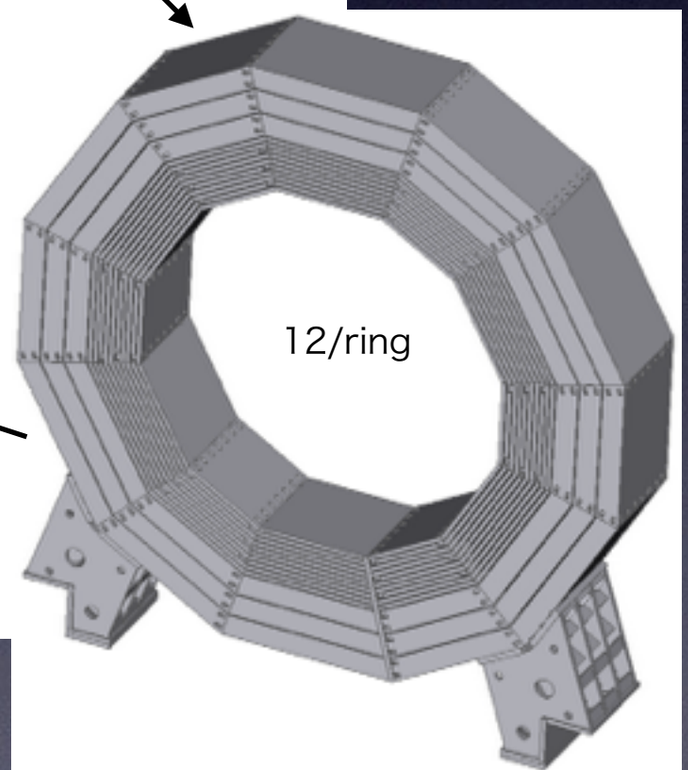

This issue is still under consideration

From Sanuki-san, 9th July 2014

I would say it is safe for us to design our detectors so that the heaviest items should be lighter than 70tons, because...

- Bridges are designed so that a 25ton-truck (5tons on the front wheels, 20tons on rear wheels) can pass them safely. (a safety factor=1.7)

- Since some of the existing bridges were built some decades ago, it is very difficult (almost impossible) to estimate physical property of the material used for them.
  Therefore, nobody can tell us the absolute maximum weight we can transport.

- To reinforce the bridges, we will build independent pillars in a river to support the bridges, or will build another bridge over the existing one. Unfortunately, we have to remove them just after our package passes the bridge, and we'll be allowed to build a structure in a river only in winter, when no heavy rain is expected. Since the number of very-heavy packages (>~100t) is 30 only for ILD, it is not realistic to reinforce the bridges.

- In 2011, big/heavy transformers (4.1m x 3.1m x 3.7m / 70tons) have been transported from Ofunato port (a nearby port) to Ichinoseki. If there is a precedent, we can expect that it would be easy to obtain permission.

- Therefore, it is safe for us to design our detectors so that the heaviest items should be lighter than 70 tons.

- "70 tons" is a guideline. If you'd like to transport a few packages slightly heavier than 70 tons, we will try to find a novel method.

Very recent plan to be discussed

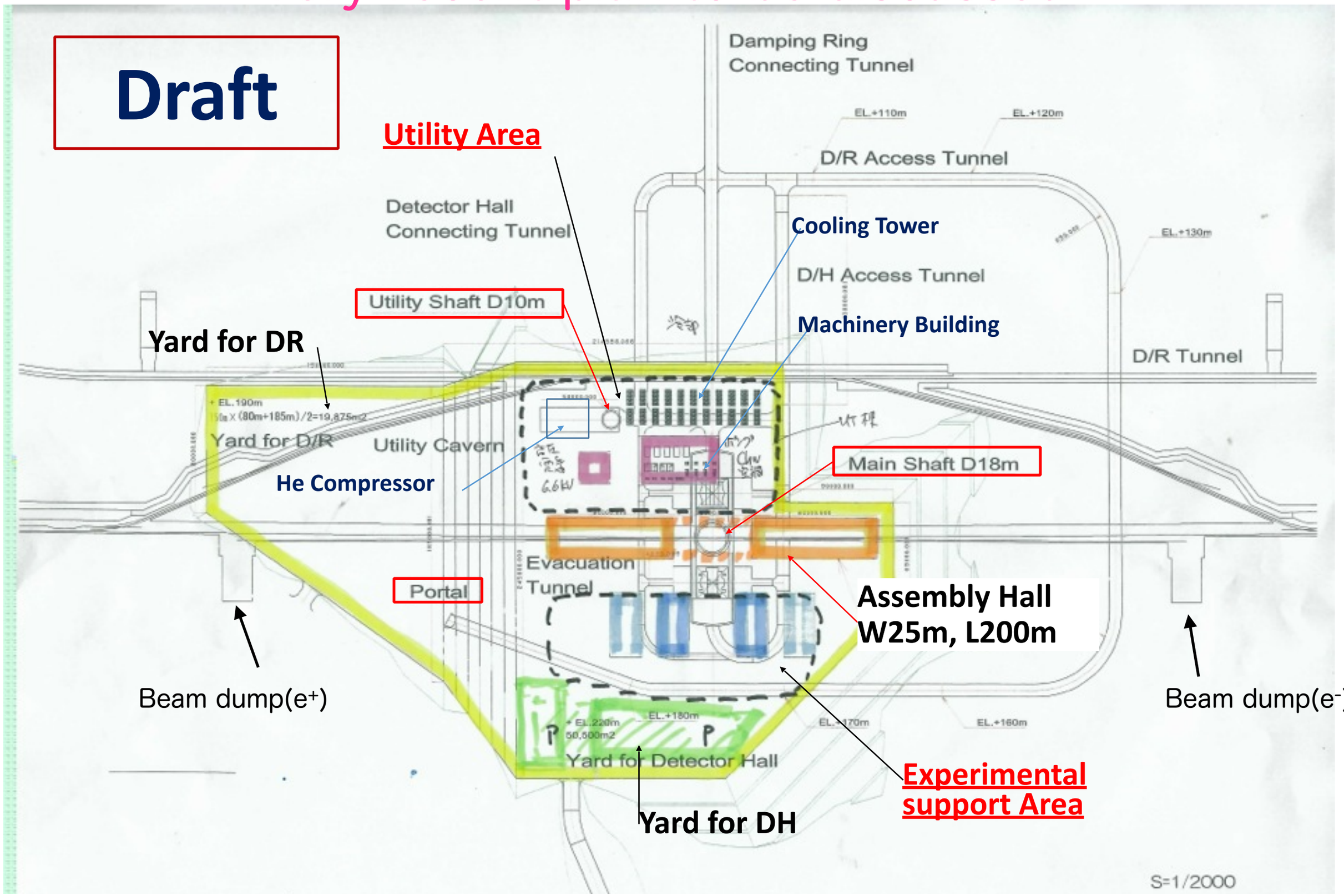

- This layout is in the preliminary draft for discussion

M. Miyahara, CFS Weekly meeting, 26 August, 2014

No Conclusion

We will discuss these issues in details at the MDI-CFS Meeting on ILC Interaction Region Issues, 4-6 September 2014, Ichinoseki Library, Ichinoseki, Iwate, Japan

https://agenda.linearcollider.org/conferenceDisplay.py?confId=6404

See you soon in Ichinoseki.