Summary of next Asian GEM module mockup studies

Katsumasa Ikematsu (Saga Univ.)

LCTPC-Japan Face-to-Face Meeting 2015

19 April, 2015 @KEK

Mockup studies for the next Asian GEM module originally launched at KEK side by our experiences of four DESY beam tests (2009-2012).

After TM decided to leave the KEK team, KI took over the responsible person of the activities.

2 major issues for the next Asian GEM module

- **Structure to stretch GEMs inside the module elements**

  - The current structure requires hand tuning of the tensions of the two 100um thick GEMs supported by the common metal posts which are not strong enough. We need some adjustment for the first (bottom) GEM when we mount the second (top) GEM.

  - The current structure may be good for R&D but may not the best suited for the mass production.

- **HV supply to GEMs from the pad plane**

  - The current structure of the HV connection of the Asian GEM module uses rather large components and may not be able to provide many HV channels necessary for the future module, for more sub-divisions of the GEM electrodes (and additional electrodes/strips to minimize the distortion).

  - The individual components of the current HV connection may increase the risk that any lost (metal) component might cause a serious HV breakdown. This happened in one of beam tests in 2010.

Current strategy for mockup studies

- **GEM frames**
  - Glued to the GEM using a simple aluminum jig (with no pre tension) **such that a certain amount of the GEM stretching would be realized automatically when we mount the framed GEM on the pad plane.** The amount of the stretch, or the GEM tension on the module, may be adjustable according to the type of GEM and it quality by using different gluing jig.
  - The amount of the stretch is chosen to be 100 μm currently based on some experiences in the past. (It is certainly necessary to measure the expansion coefficient and its temperature dependence of the GEM used.)
- **Positioning of a framed GEM**
  - Fixed on the pad plane or on the other framed GEM by using a matching step structure cut on the pad plane and the frames.
- **HV connection**
  - Made by a tiny metal pin and its two receptors commercially available. One receptors are soldered to the GEM electrode (molded in the frame) and another to the HV line on the pad plane. These pins are inserted after the framed GEM are mounted on the modules.

Module Mockup in 2014

Still Stretch GEMs on the Pad Plane, but simpler

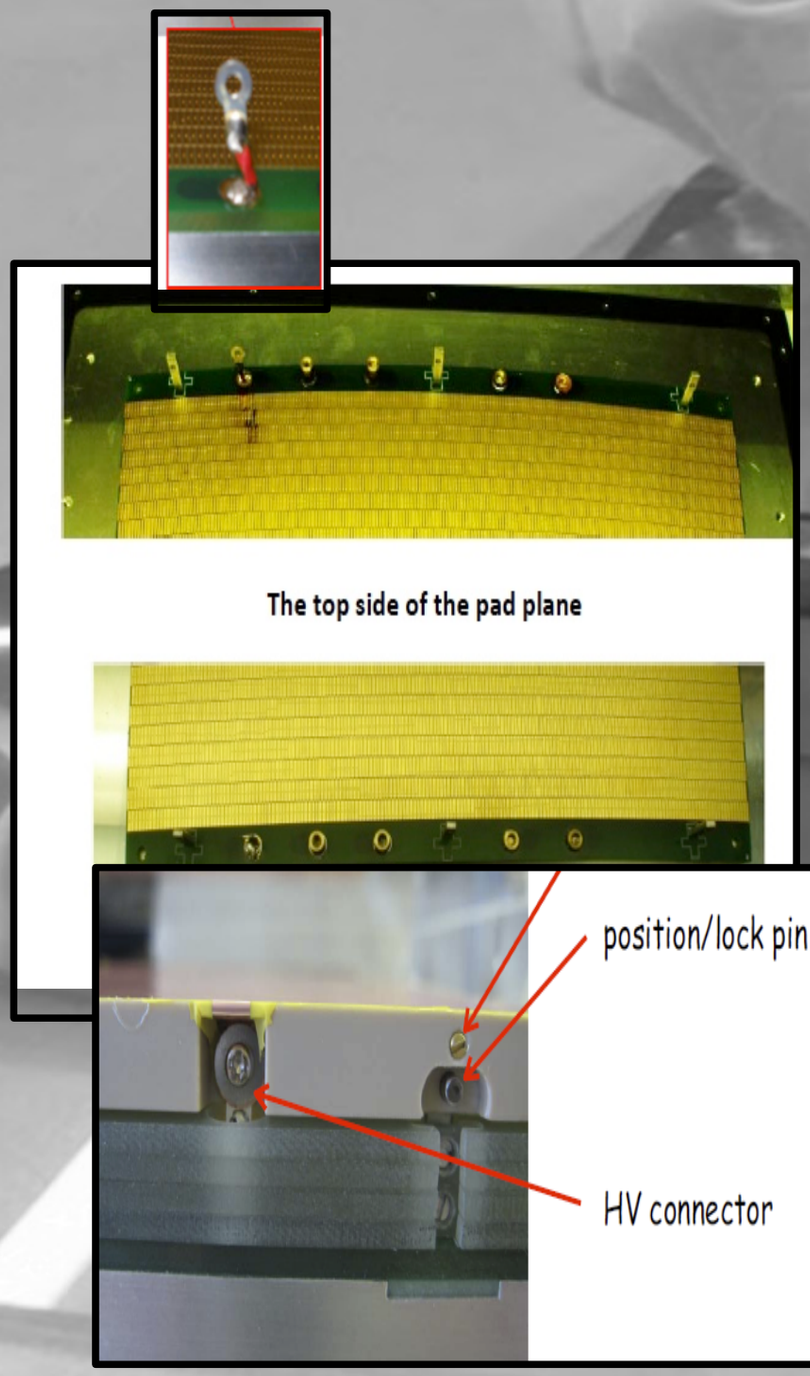

Current module

Only 1 GEM in Dec 2014

Gem flatness ≤ 100 microns (measured)

Stretch GEM by a fit-in structure of the frame

HV connection by a pin-hole

Mock-up for next module

Upper mechanical structure

R&D for 50um GEM triple-stack

GEM3

GEM2

GEM1

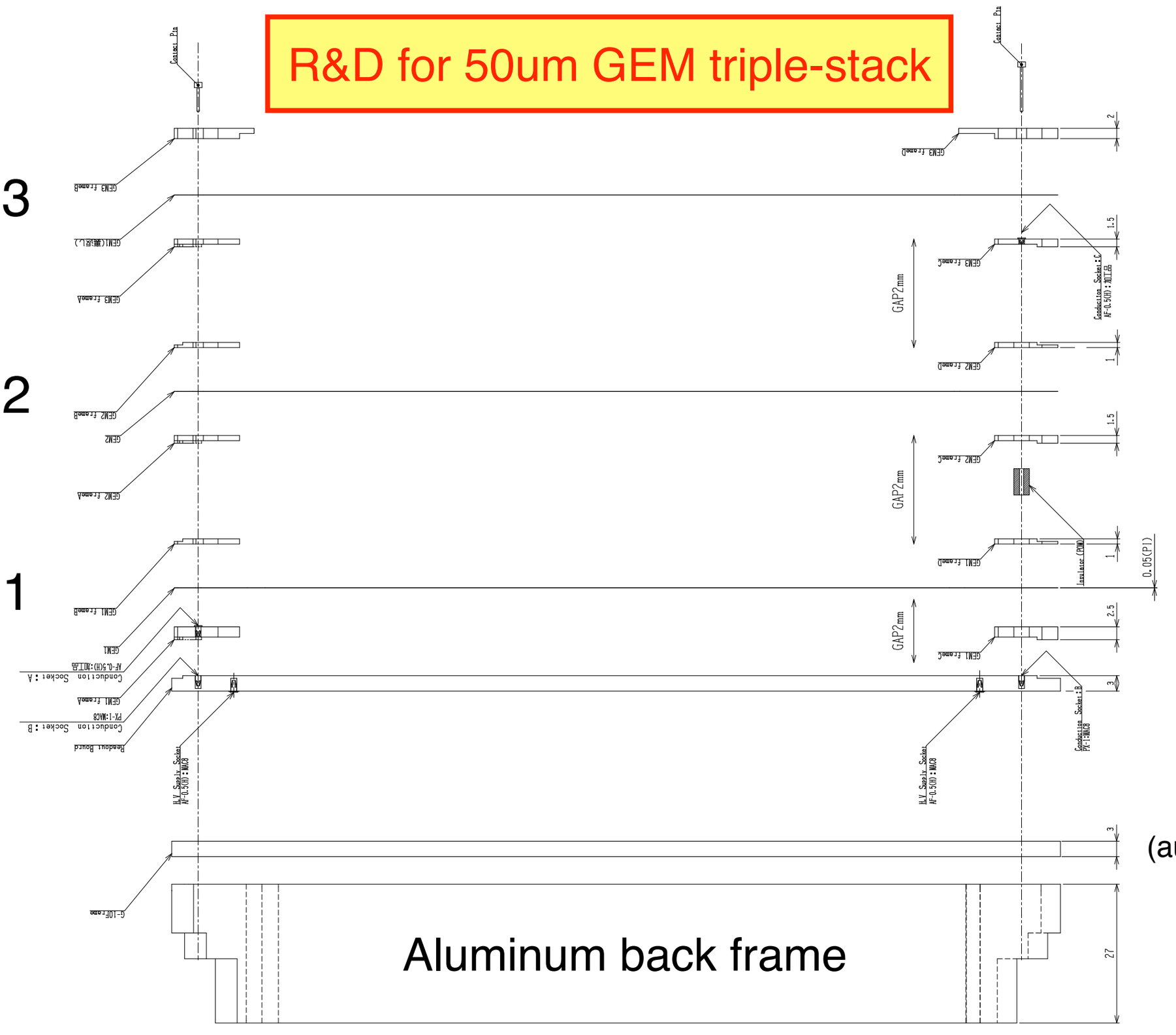

Pad plane

(auxiliary G10 frame)

Upper mechanical structure (Frame)

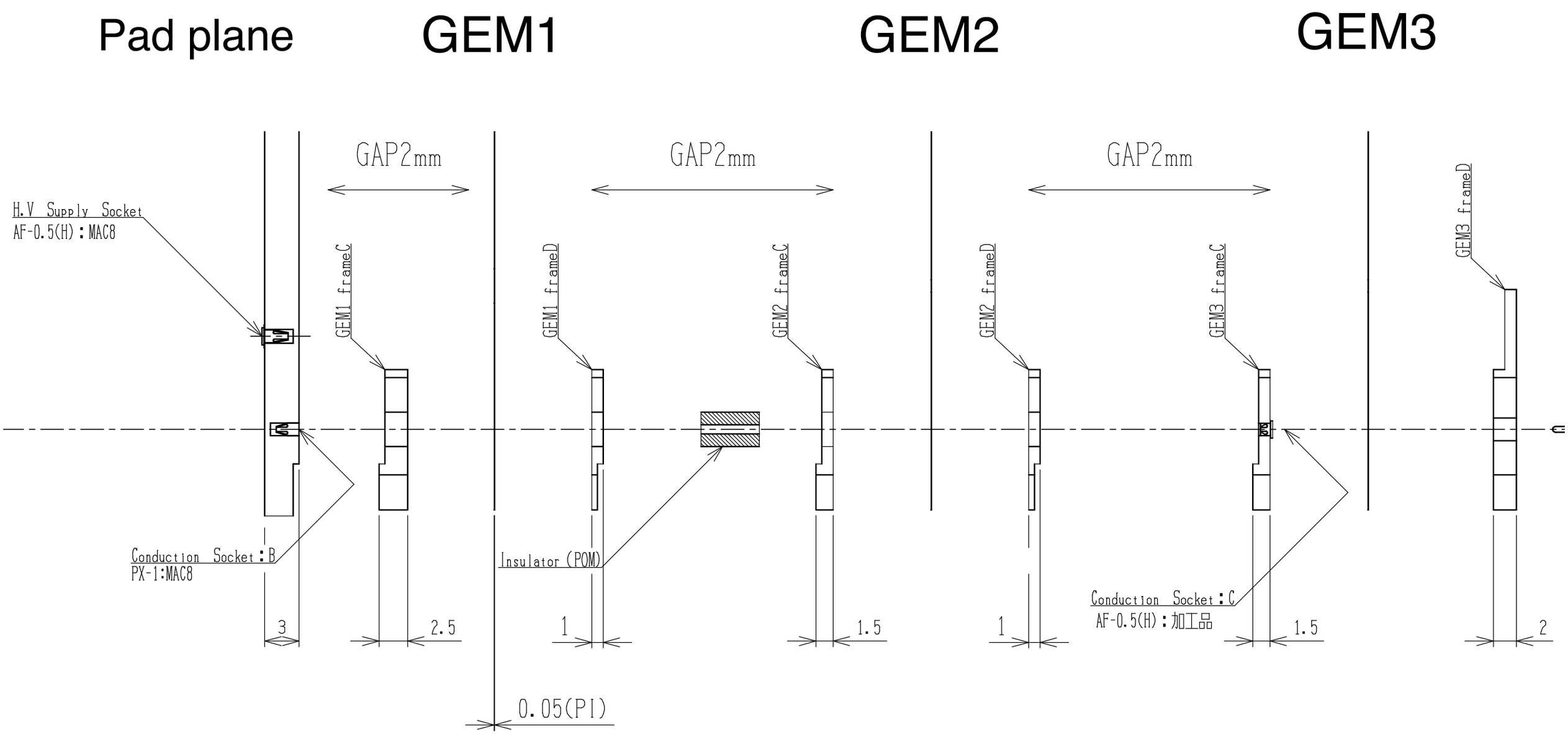

Upper mechanical structure (Frame)

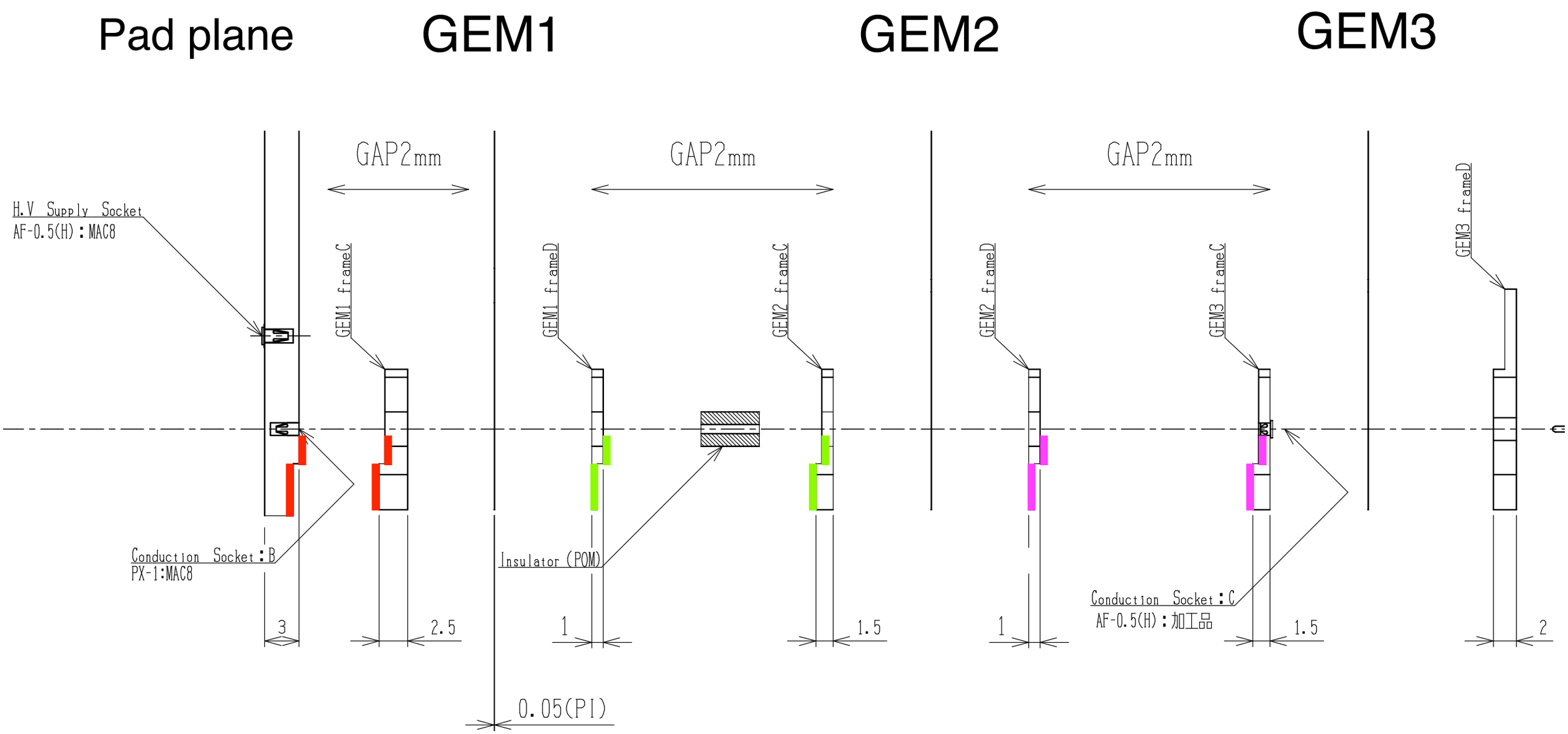

Fit-in structure of the frames

Upper mechanical structure (Frame)

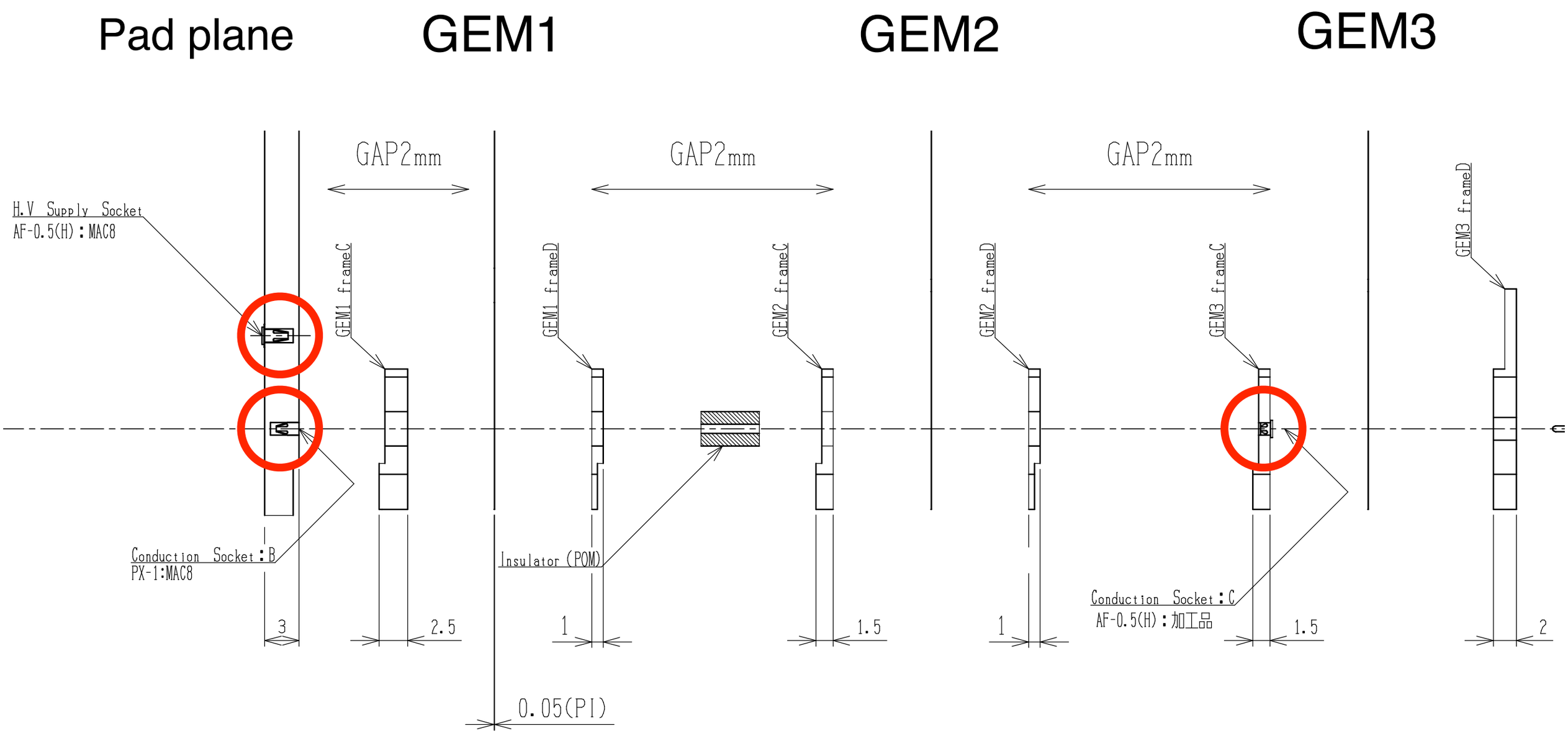

H.V. contact by using conduction sockets

Upper mechanical structure (GEM3)

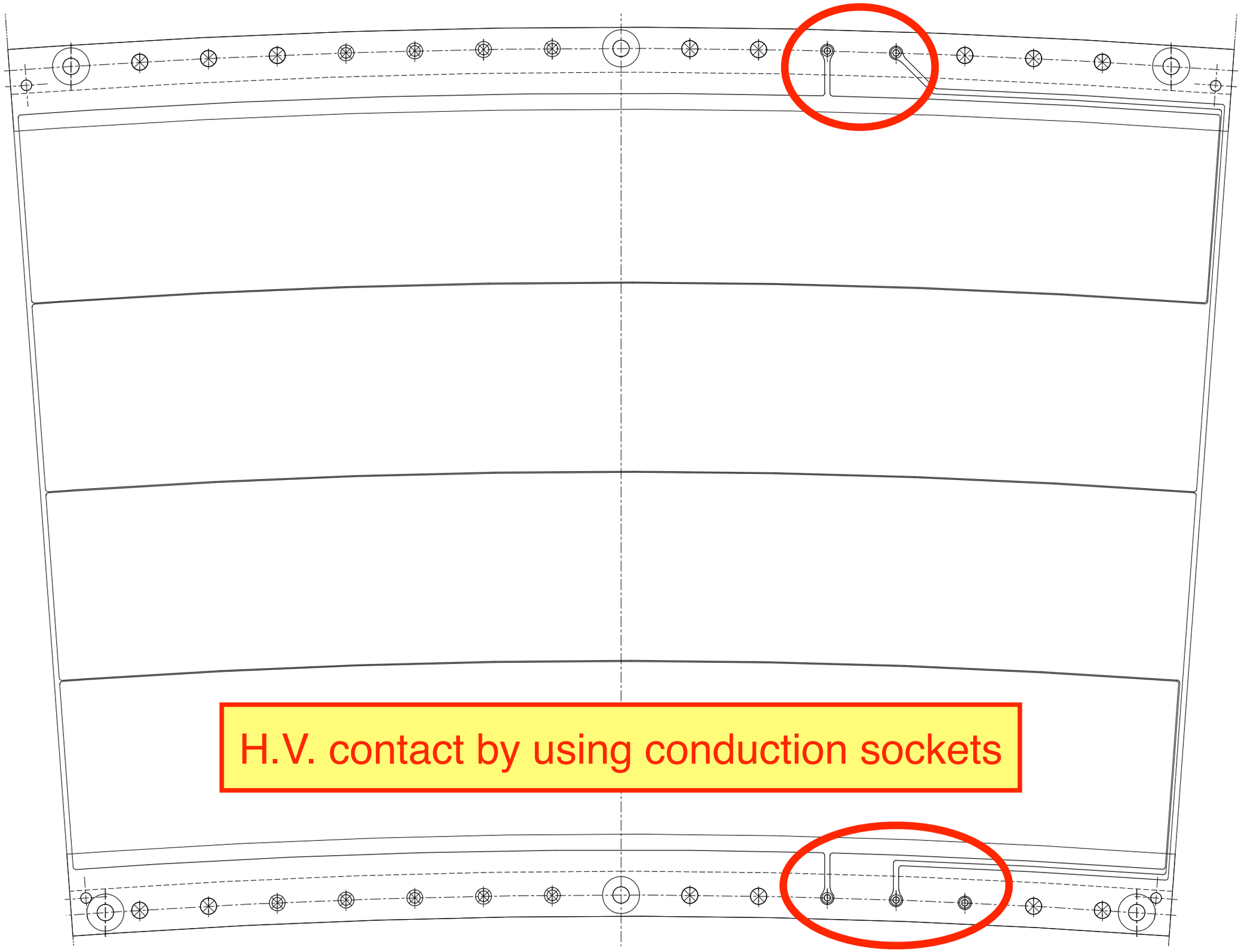

Upper mechanical structure (GEM3)

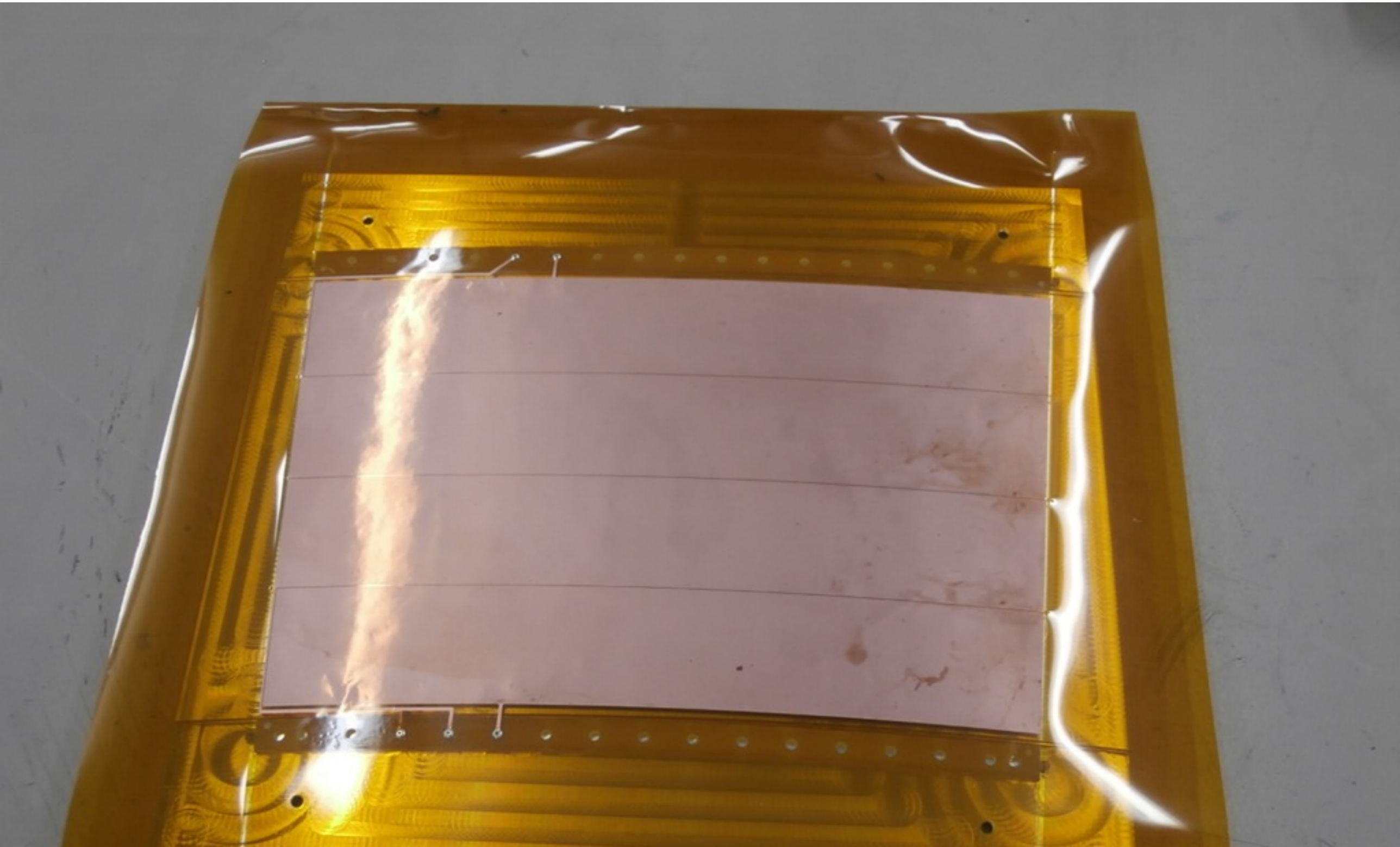

Upper mechanical structure (GEM3)

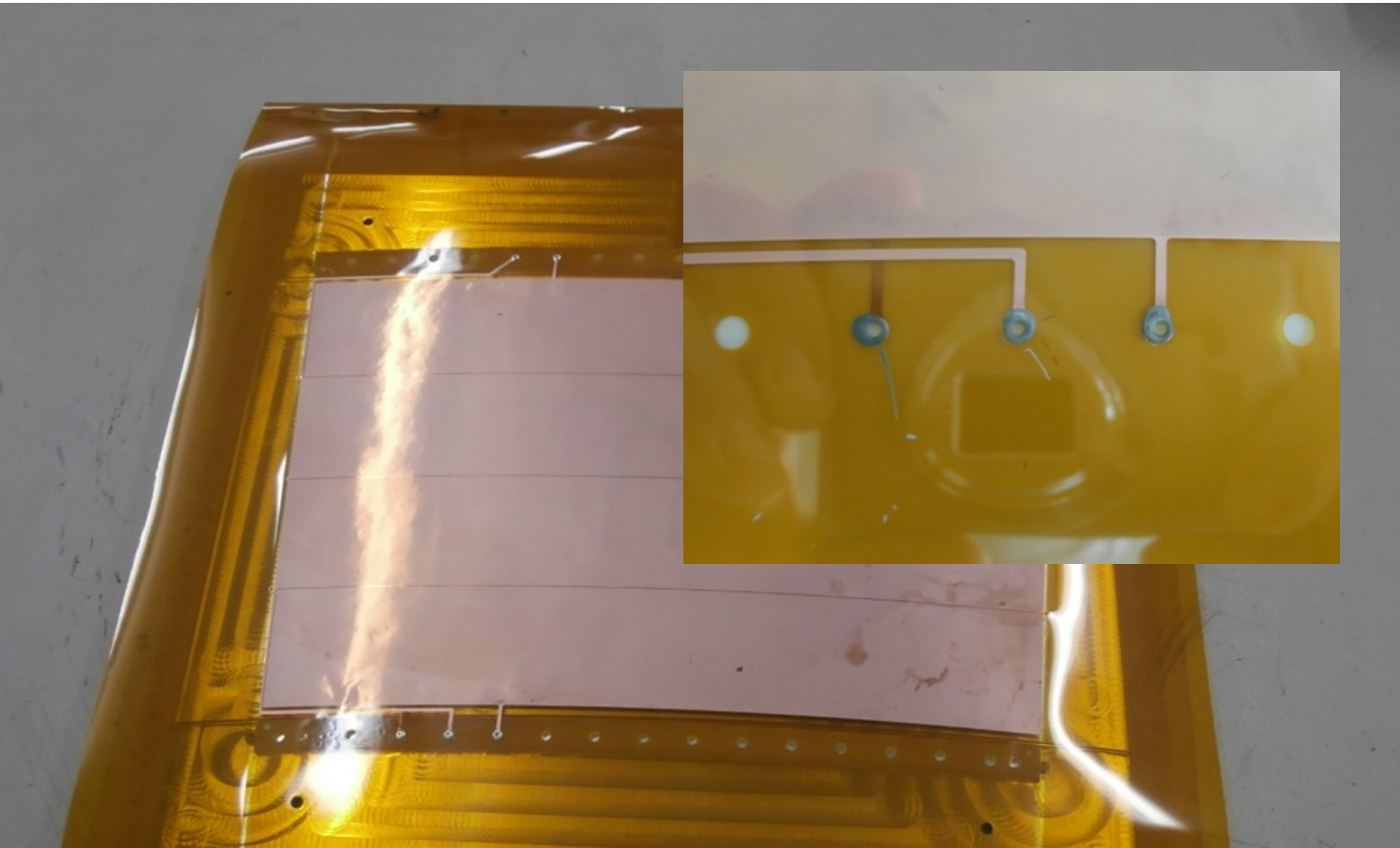

Upper mechanical structure (GEM3)

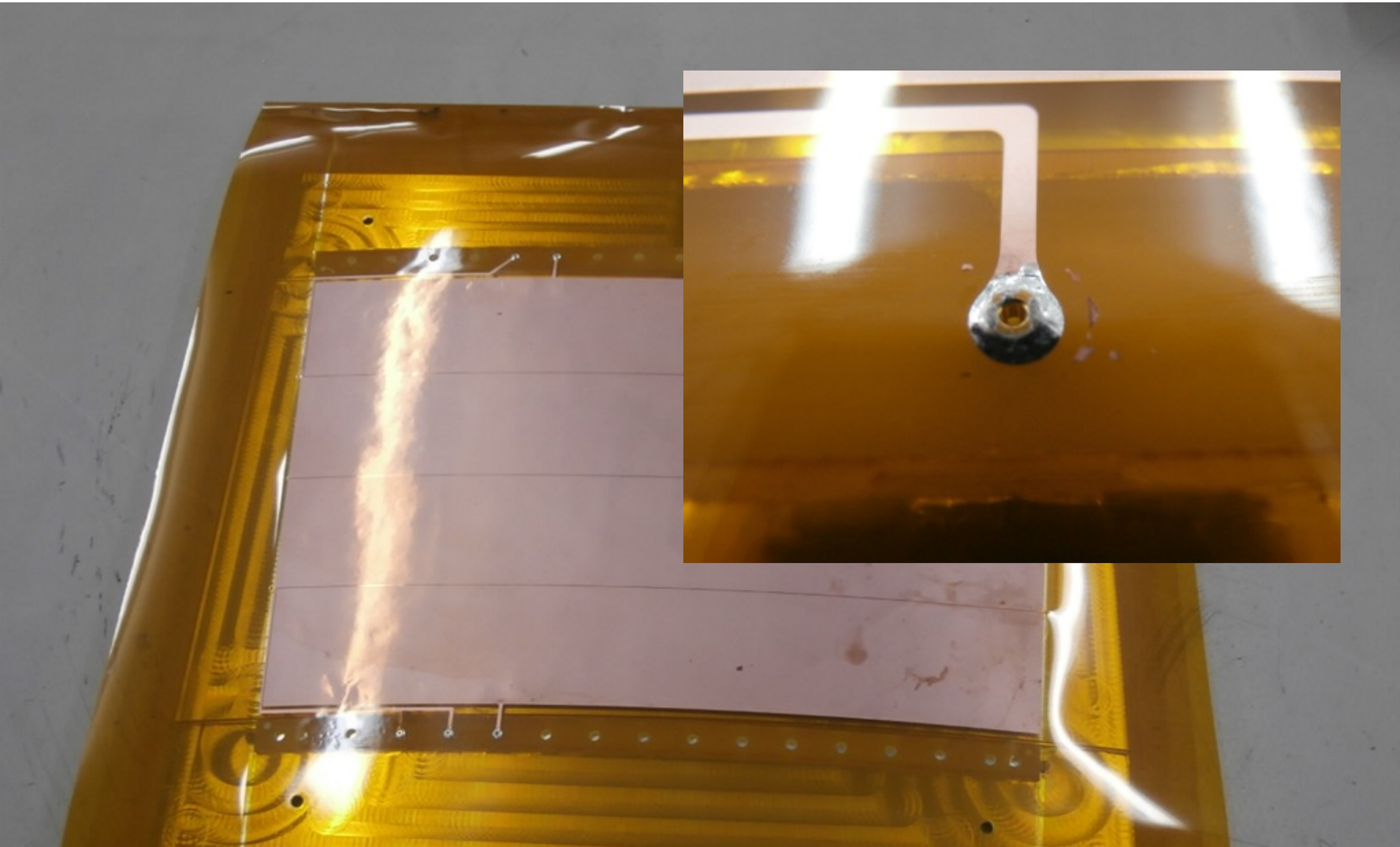

Upper mechanical structure (Frame)

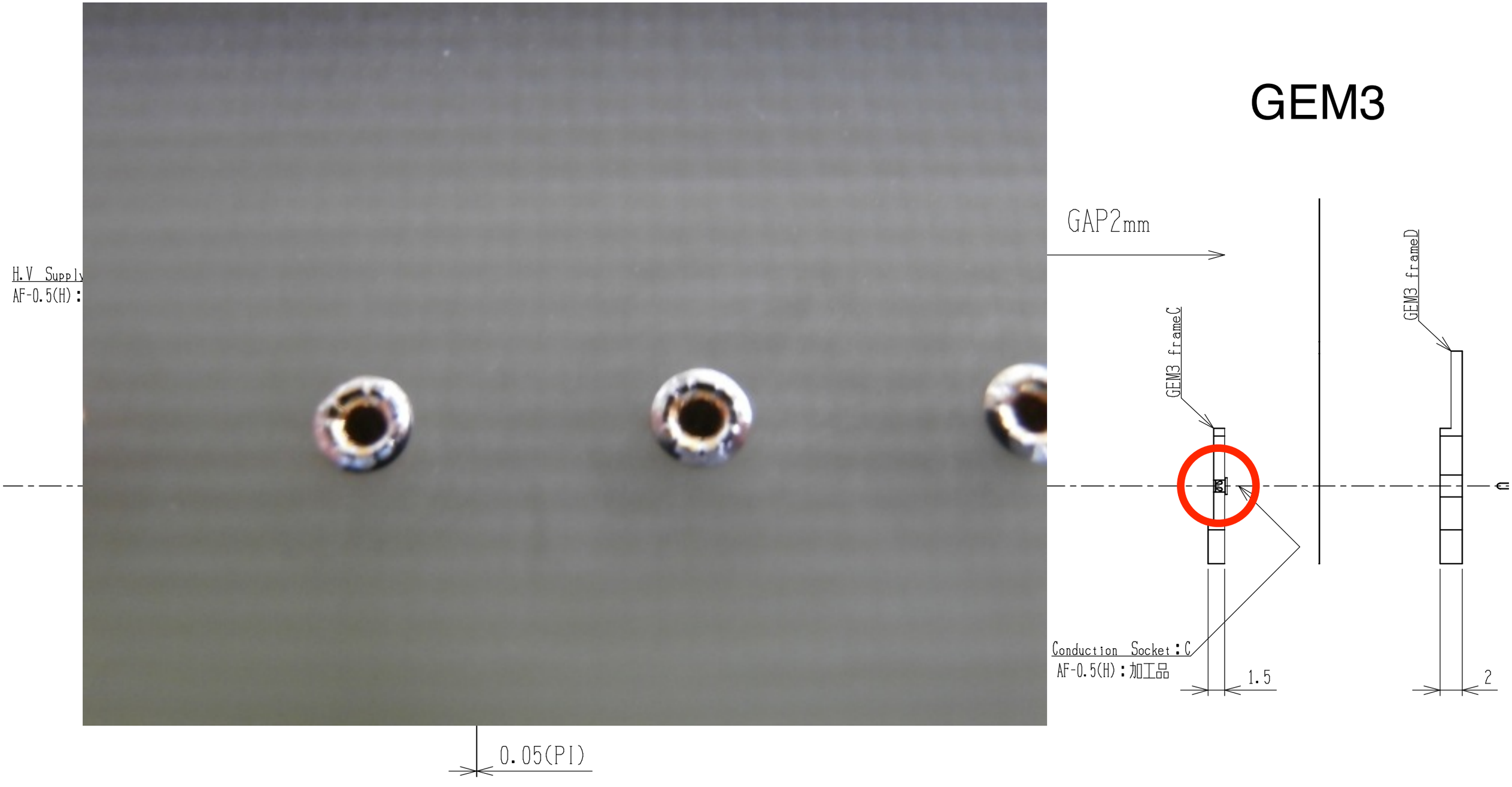

H.V. contact by using conduction sockets

Upper mechanical structure (GEM3)

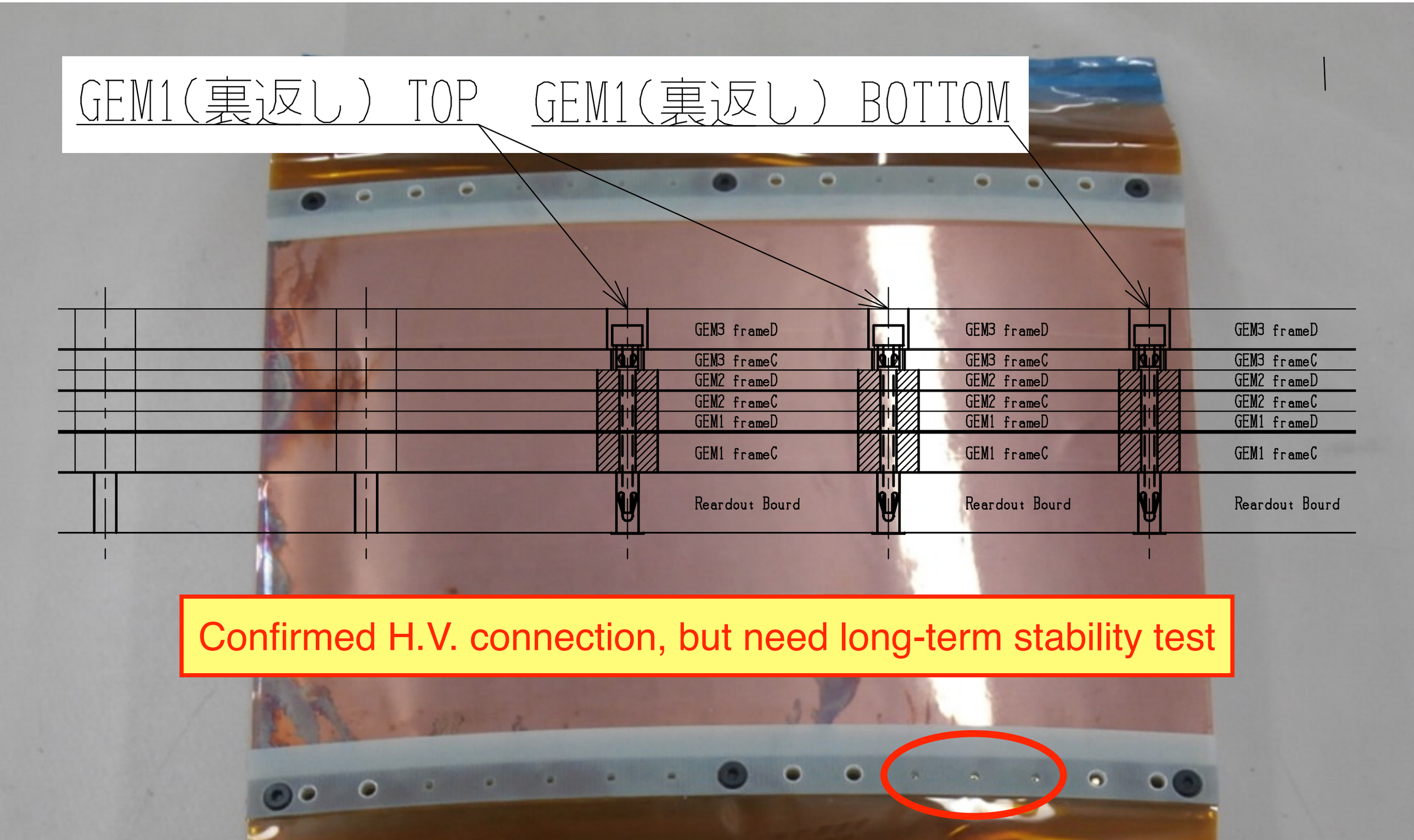

Confirmed H.V. connection, but need long-term stability test

Assembly test in Dec 2014

- **The 1st test**

  - Made mounting only one layer of 50 μm thick GEM (the spare GEM) on the pad plane which was not glued on the Aluminum back frame. Used the 6 bolts to fix the pad plane and the GEM on the back frame when measured.

- **Results from GEM flatness measurements**

  - The flatness of the first GEM layer was almost within 100 μm with a global slope of the same order along the long side of the module.

GEM flatness measurement

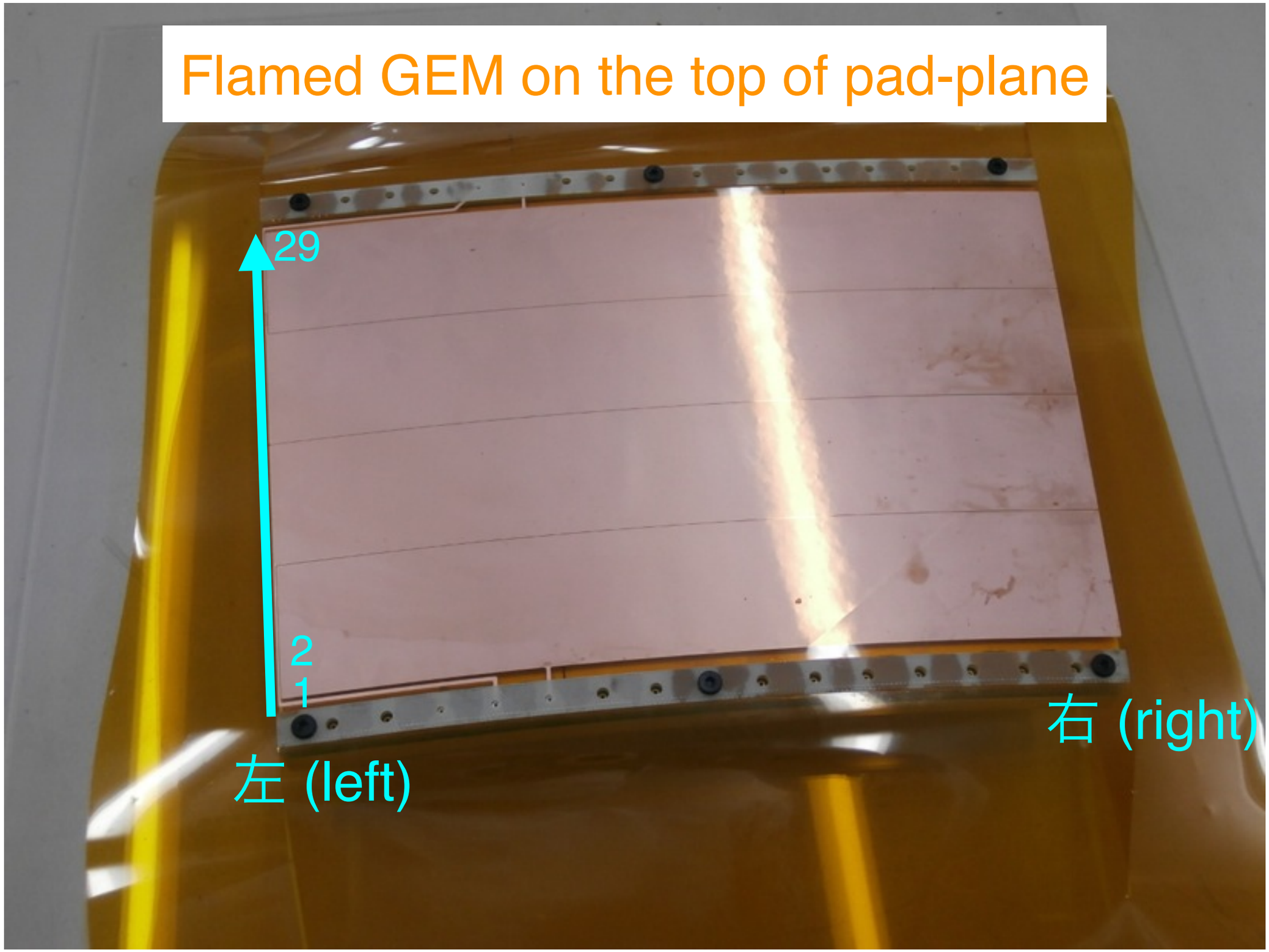

Single GEM flatness (spare) in Dec

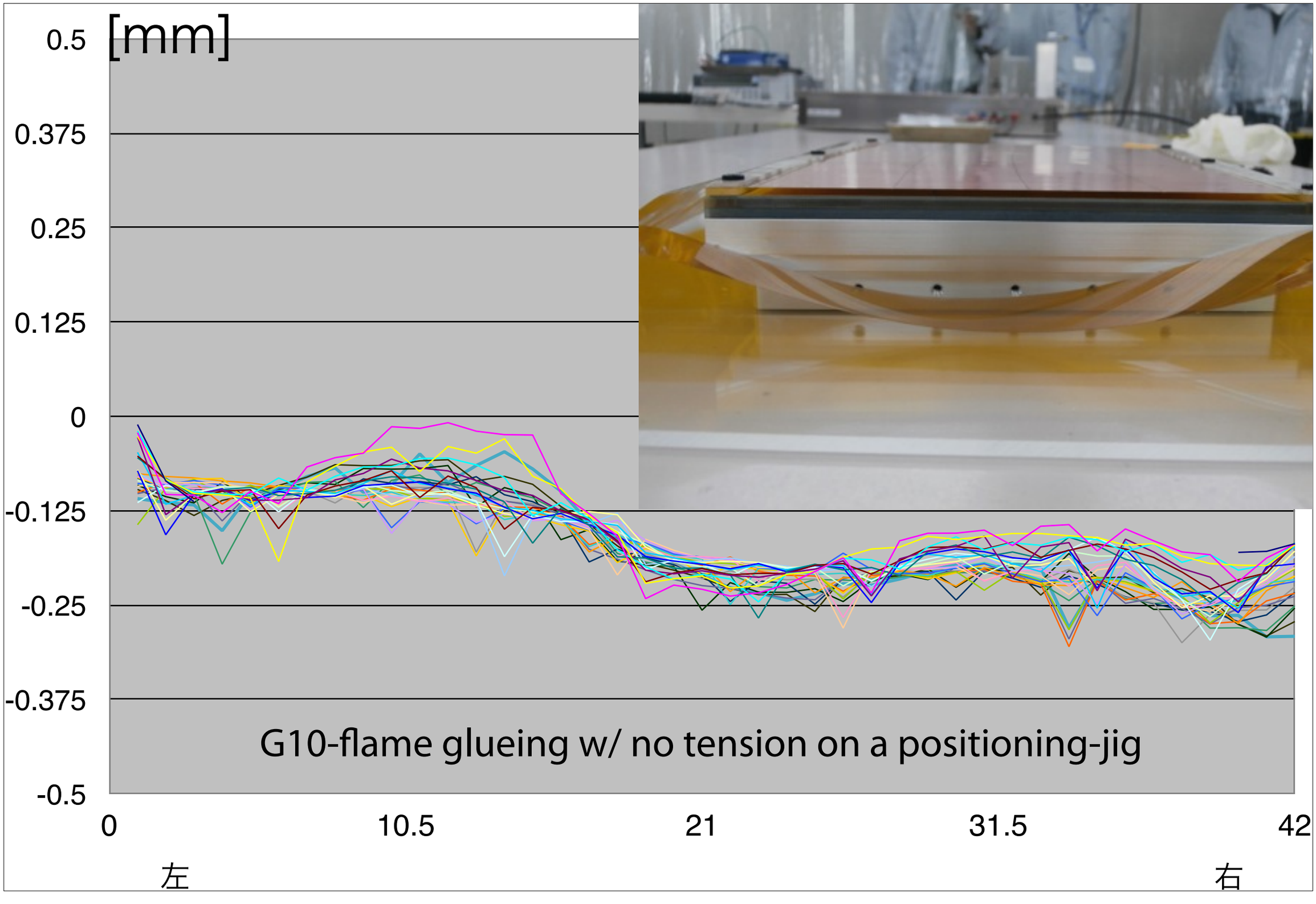

Single GEM flatness (spare) in Dec

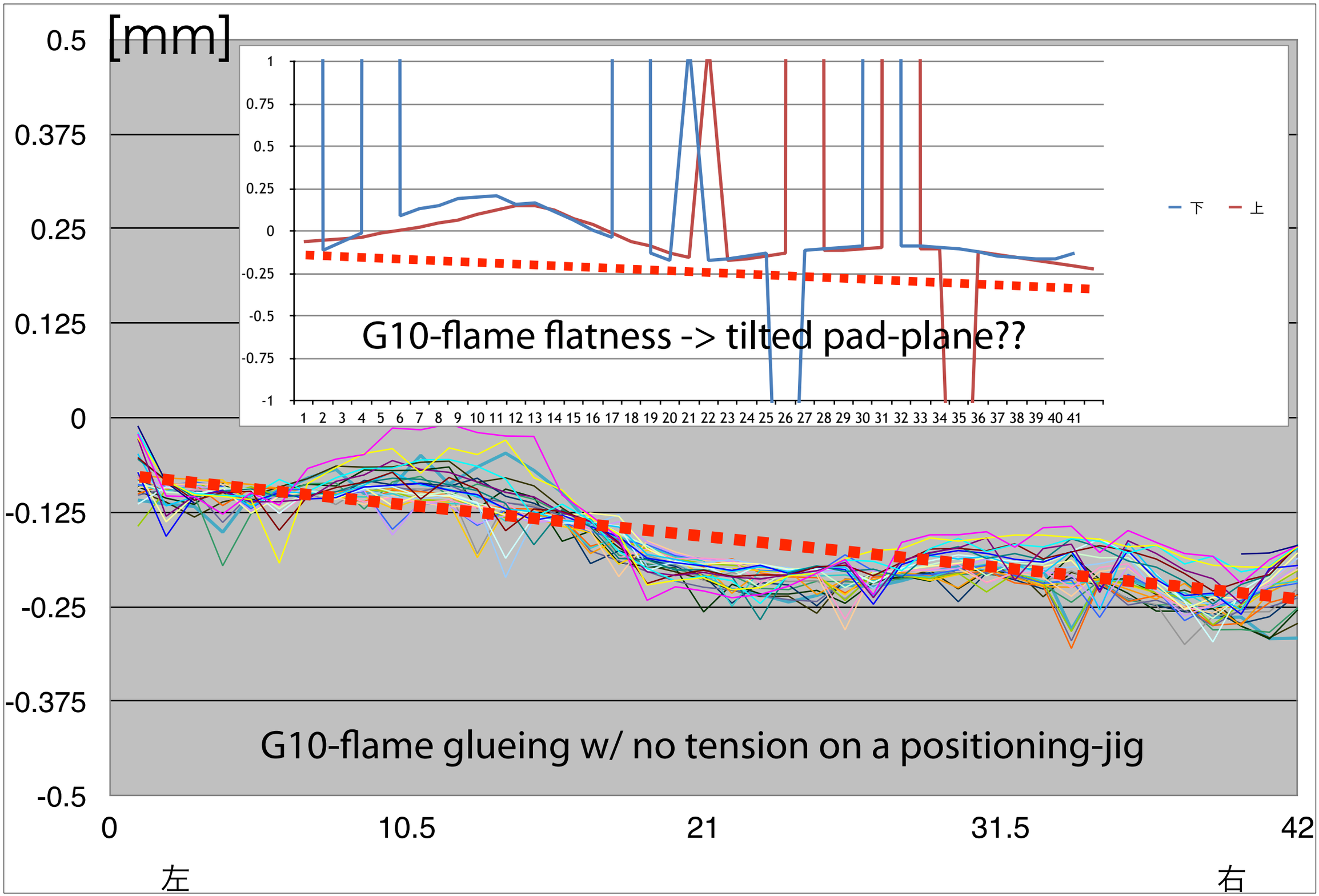

Assembly test in Jan 2015

- **The 2nd test**

  - The three layers of the 50 μm thick GEM were mounted on the pad pane which was glued on the Aluminum back frame.

- **Results from GEM flatness measurements**

  - The gluing of the pad plane onto the back frame was a big failure! The max deformation of the pad plane thought to be glued on the back frame was measured to be around 0.5 mm! This was because that no weight/ pressure was applied on the pad plane when glued…

  - As the result the pad plane was glued only at their sides but not at their center due to the initial deformation of the pad plane. When the screws at the center of the long edges of the module were tightened, the deformation of the pad plane (thus also the GEMs on it) changed to the double peak shape with a deviation of the same order.

  - The common left-light asymmetry of the deformations is probably due to the difference of the structures of the HV connections.

GEM flatness measurement

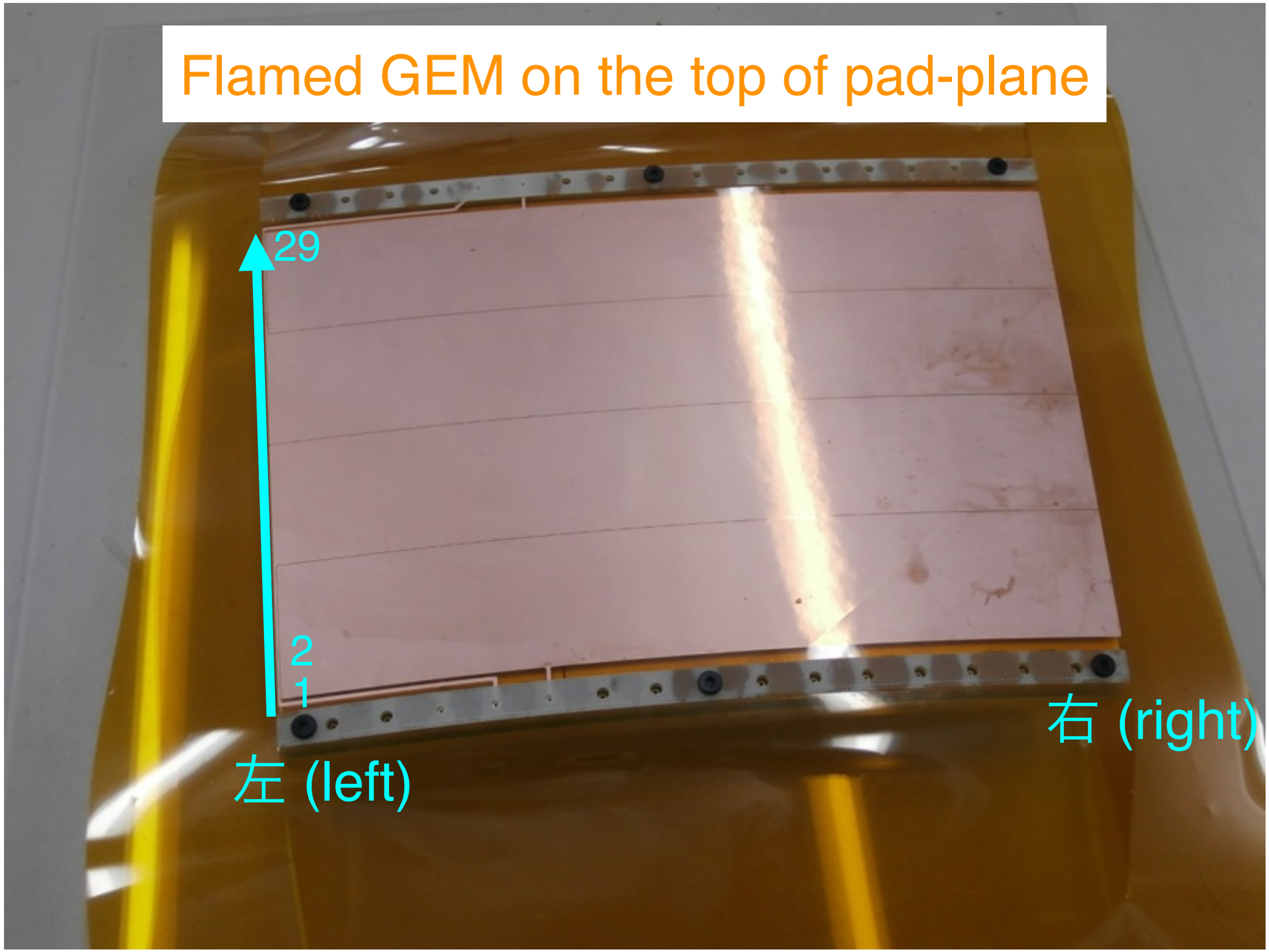

Tripple GEM flatness in Jan 2015

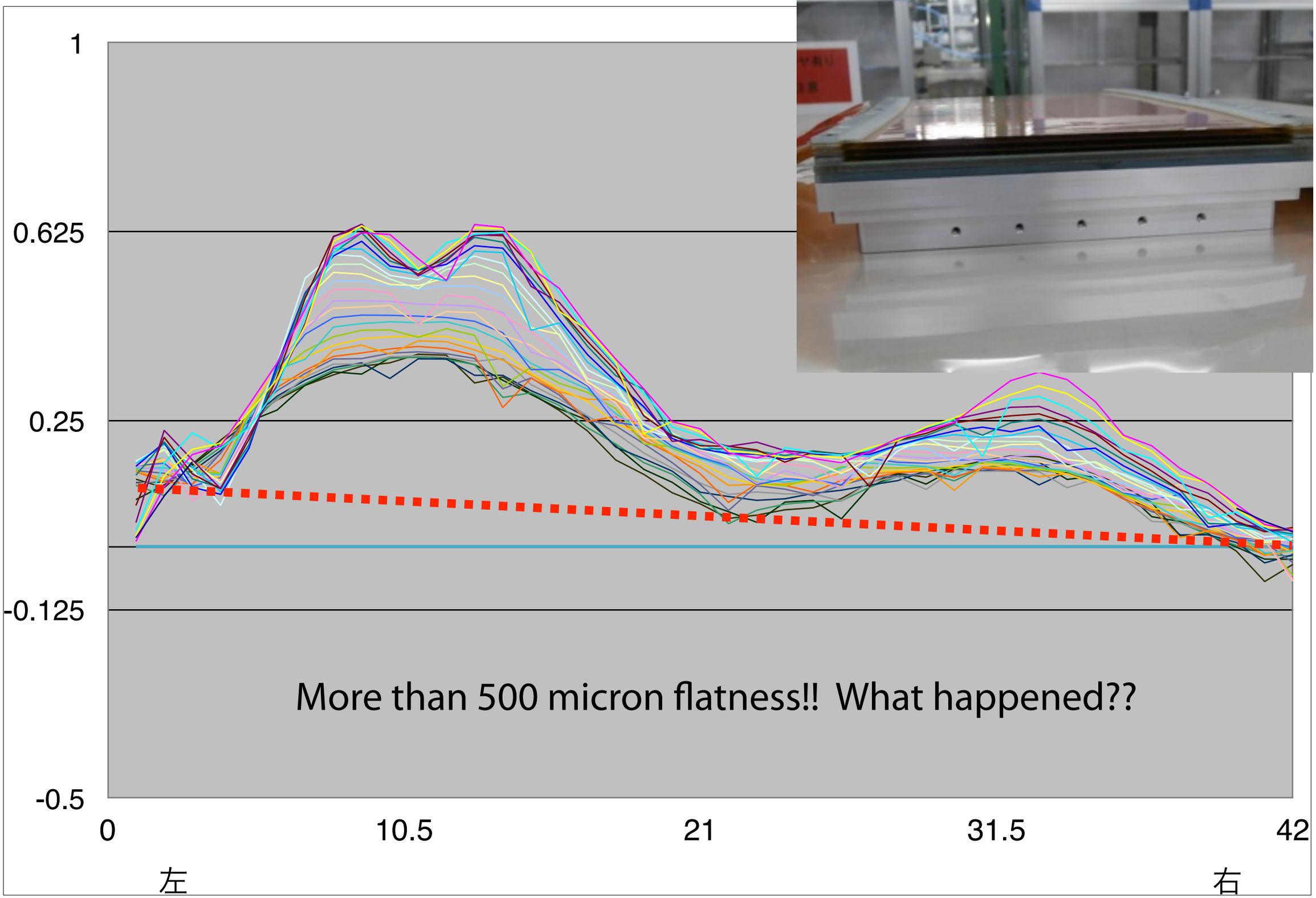

Pad-plane flatness in Jan 2015

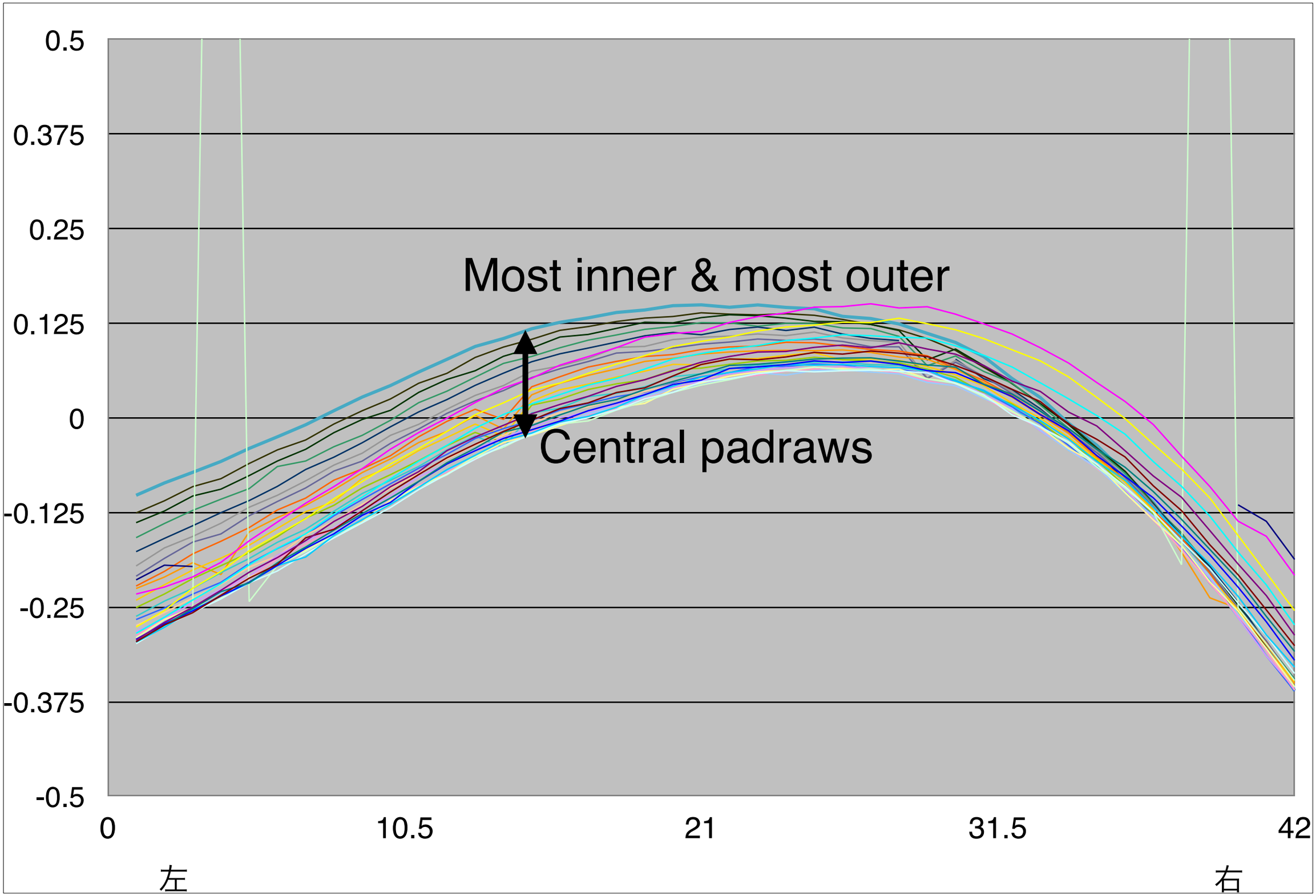

Upper mechanical structure (Frame)

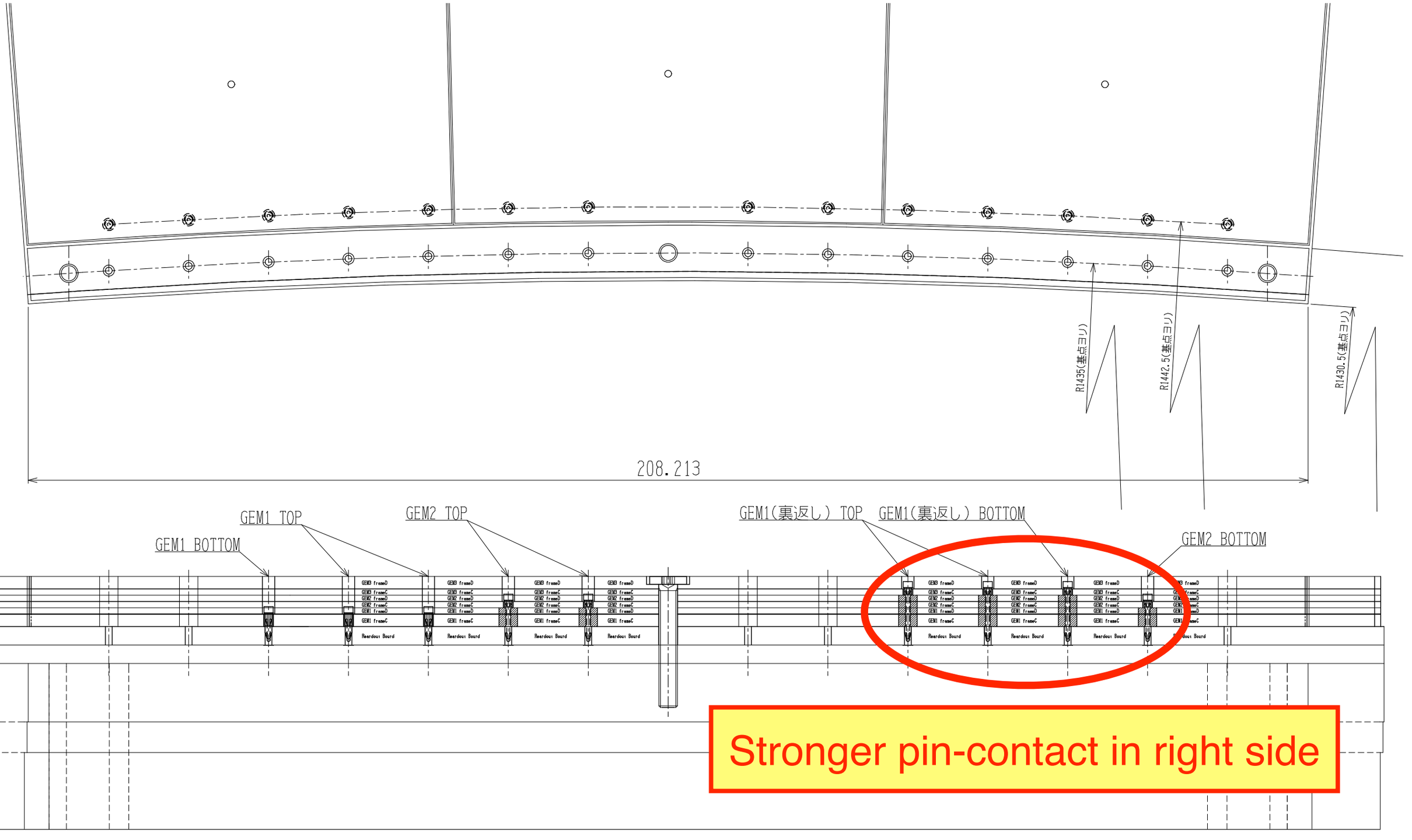

R&D plans for the next few months

- **Perform a HV connection stability test**

  - In preparation at KEK Fuji-B4

- **Correct the wrong gluing of the pad plane by REPIC**

  - Remove the pad plane and try to glue it properly on the back frame and repeat all again. There should a good chance to get better results of the flatness.

  - The modification to fix each GEM (framed) individually by screws in each step of the GEM mounting will be made. The current assembly required many hands to keep the all three layers in position before fixing them by the common screws…

Backup

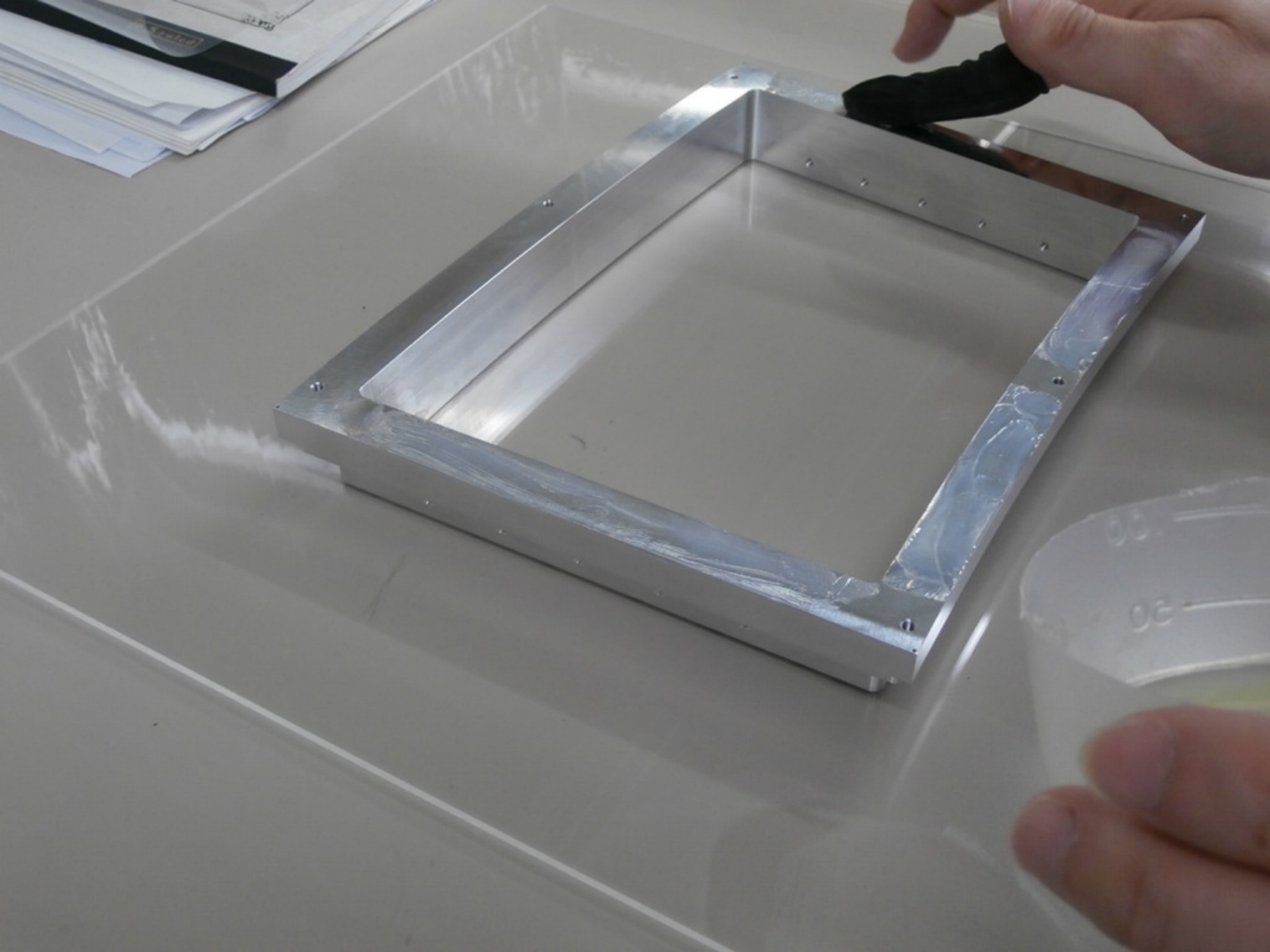

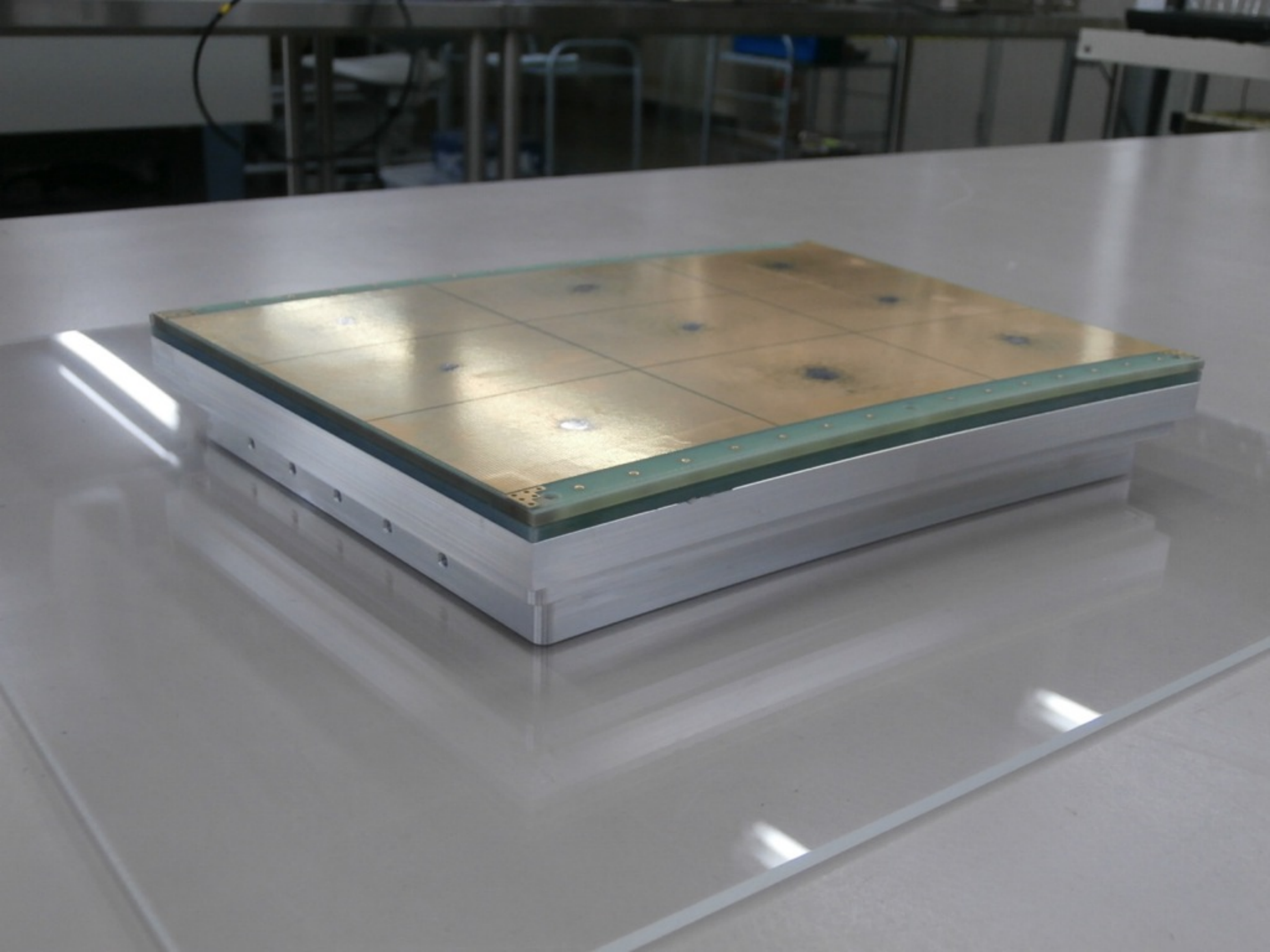

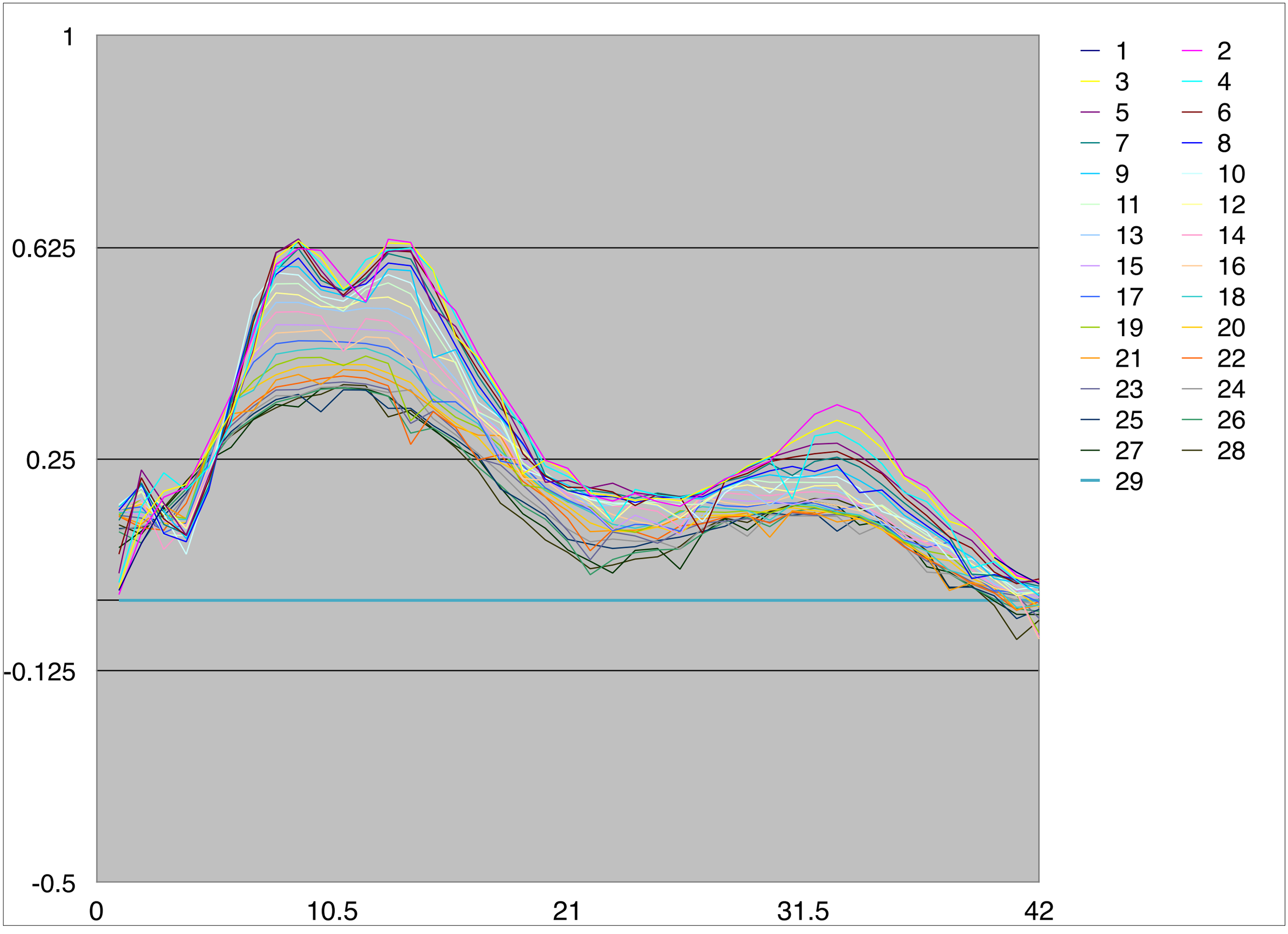
1
0.625
0.25
-0.125
-0.5
0
10.5
21
31.5
42
1
2
3
4
5
6
7
8
9
10
11
12
13
14
15
16
17
18
19
20
21
22
23
24
25
26
27
28
29

Flatness of G10 frame themselves

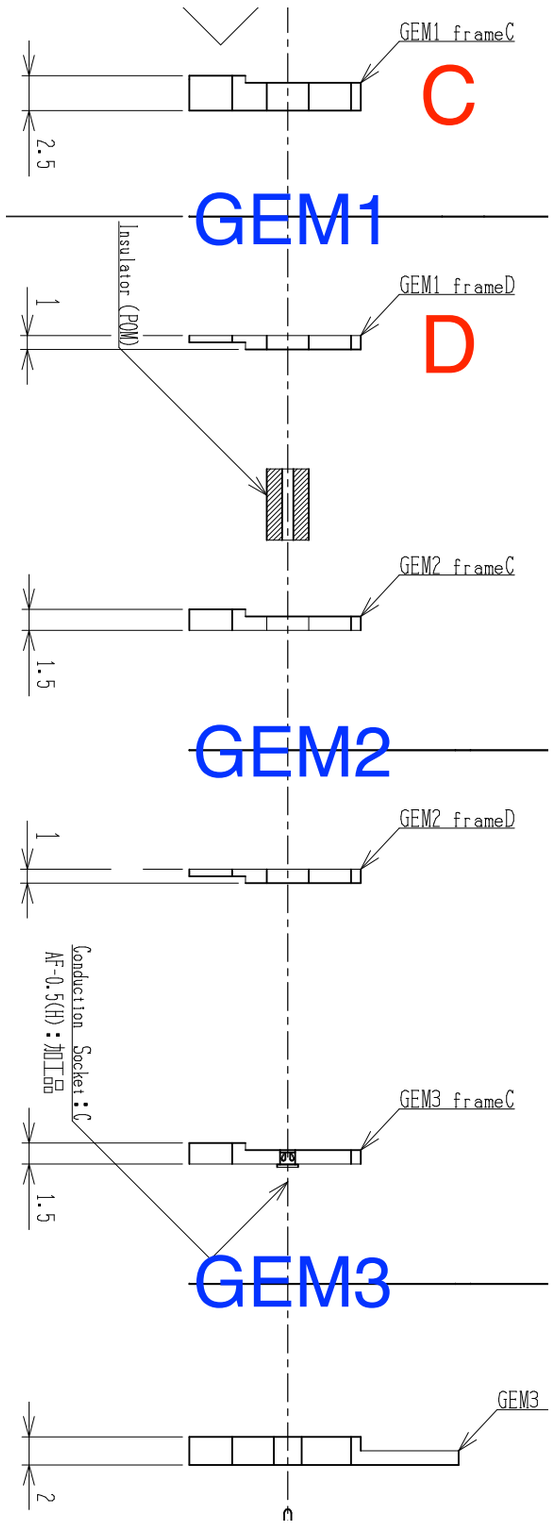

[mm]		左1	左2	左3
GEM1	C	2.000	2.000	1.999
GEM1	D	0.997	0.999	0.999
GEM2	C	0.972	0.970	0.968
GEM2	D	0.953	0.953	0.950
GEM3	C	1.018	1.020	1.023
GEM3	D	1.990	1.993	1.990
GEM1	A	2.009	2.002	2.003
GEM1	B	0.998	0.999	1.000
GEM2	A	0.969	0.970	0.967
GEM2	B	0.965	0.958	0.963
GEM3	A	1.020	1.019	1.015
GEM3	B	1.990	1.999	1.995

Flatness in each frame is good

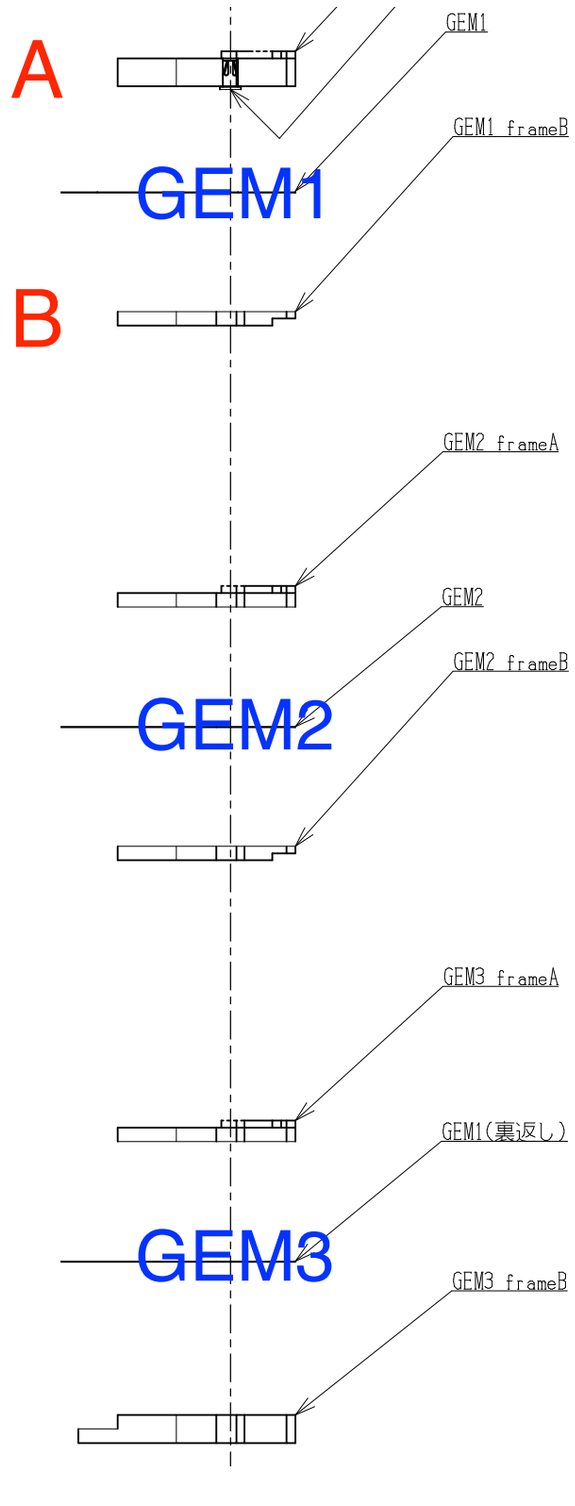

Flatness of G10 frame themselves

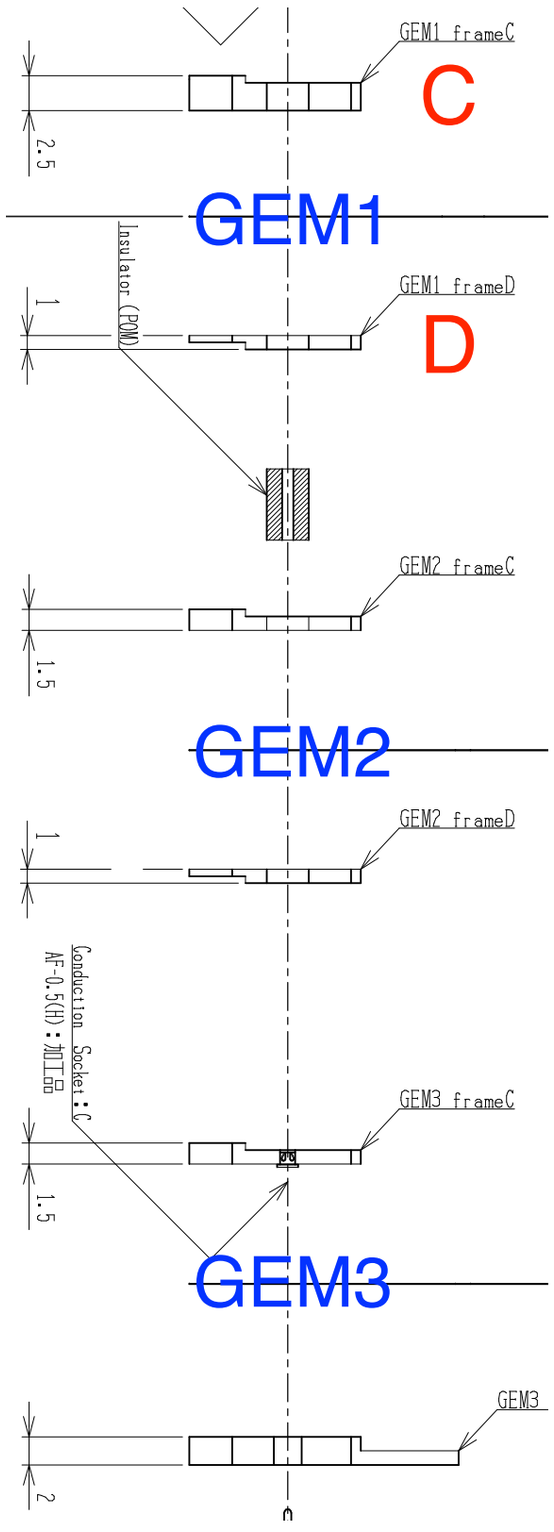

[mm]		左1	左2	左3
GEM1	C	2.000	2.000	1.999
GEM1	D	0.997	0.999	0.999
GEM2	C	0.972	0.970	0.968
GEM2	D	0.953	0.953	0.950
GEM3	C	1.018	1.020	1.023
GEM3	D	1.990	1.993	1.990
GEM1	A	2.009	2.002	2.003
GEM1	B	0.998	0.999	1.000
GEM2	A	0.969	0.970	0.967
GEM2	B	0.965	0.958	0.963
GEM3	A	1.020	1.019	1.015
GEM3	B	1.990	1.999	1.995

Flatness of max 5% in frames
is not so nice…

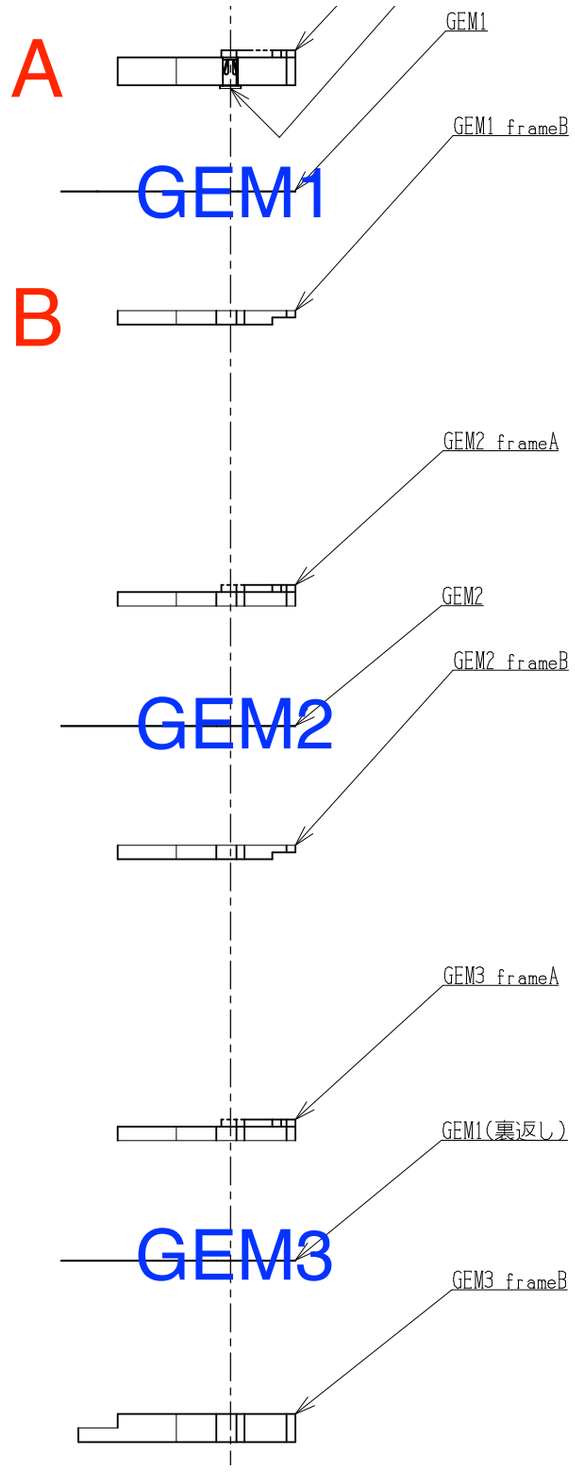

Flatness of G10 frame themselves

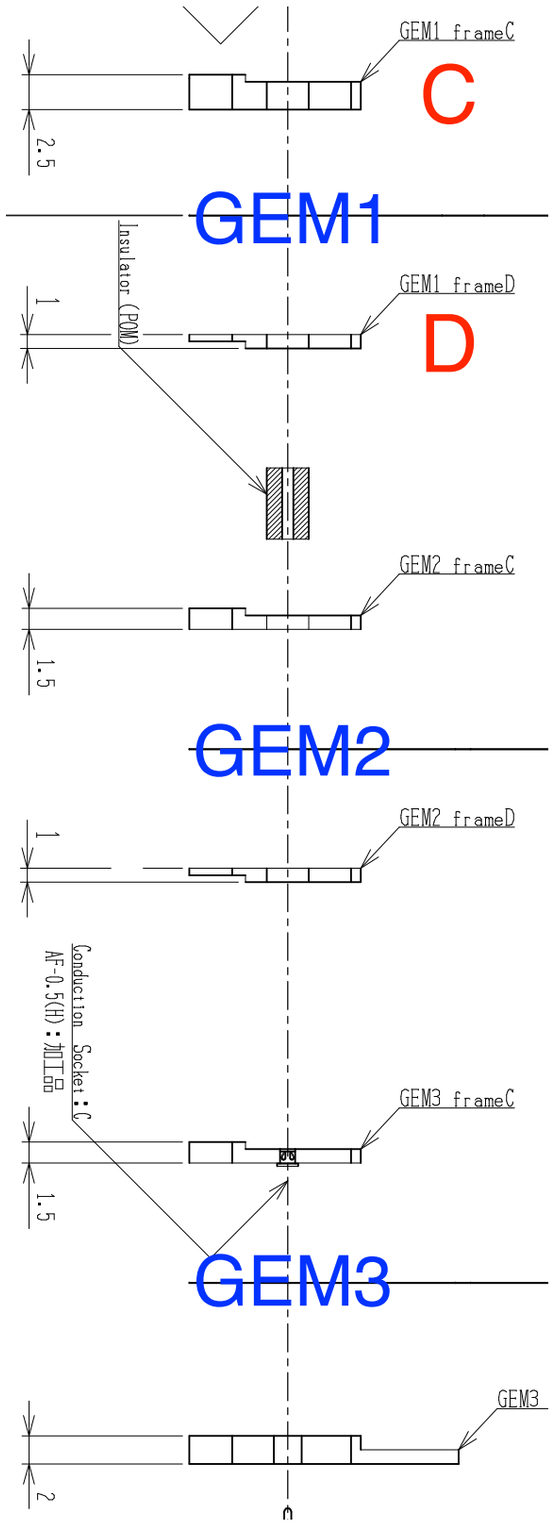

[mm]		左1	左2	左3
GEM1	C	2.000	2.000	1.999
GEM1	D	0.997	0.999	0.999
G				8
G				0
GEM3	C	1.018	1.020	1.023
GEM3	D	1.990	1.993	1.990
GEM1	A	2.009	2.002	2.003
GEM1	B	0.998	0.999	1.000
GEM				.967
GEM				.963
GEM3	A	1.020	1.019	1.015
GEM3	B	1.990	1.999	1.995

No grinding in these frames

Need to use PEEK or Halogen-free G10
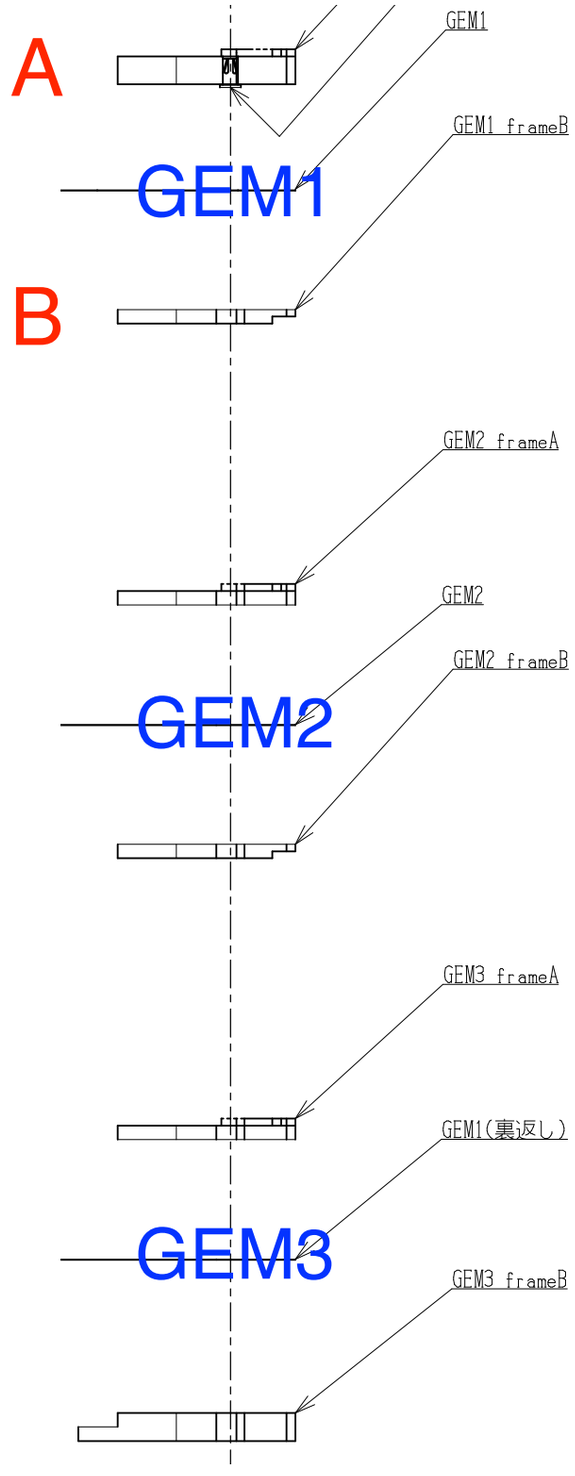
Flatness of max 5% in frames is not so nice…