Adopting the Kamaboko tunnel in the CR (BDS Tunnel Layout)

We just started the design of the tunnel layout for BDS section.

We will fix the tunnel layout within 1 year.

Masanobu MIYAHARA,KEK
Toshiyuki OKUGI, KEK
2015/04/23
ALCW2015, KEK, Japan

Beam Delivery System (BDS) Overviews

BDS is the beamline after main line.

BDS consists of

- *Beam diagnostic section*
- *Collimator system*
- *Final Focus beamline*
- *Dump lines*

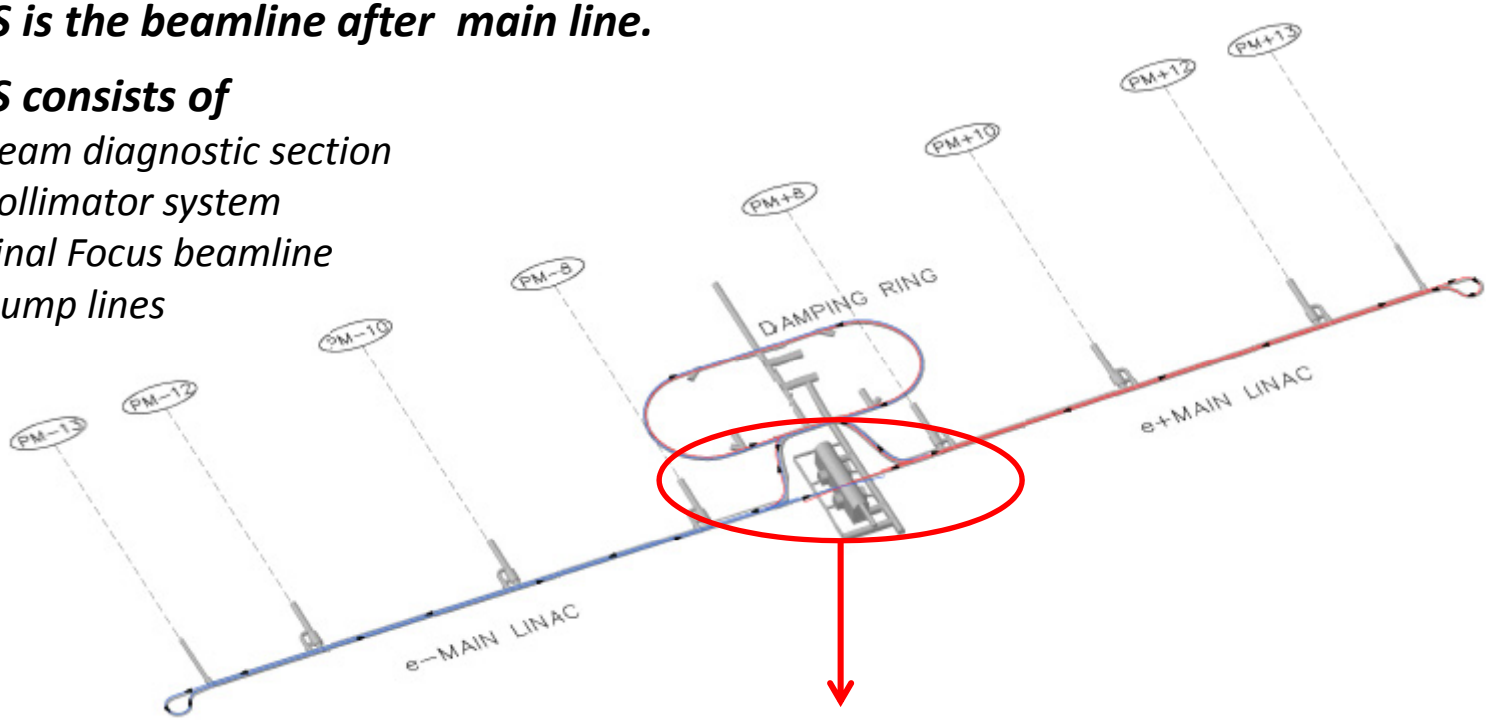

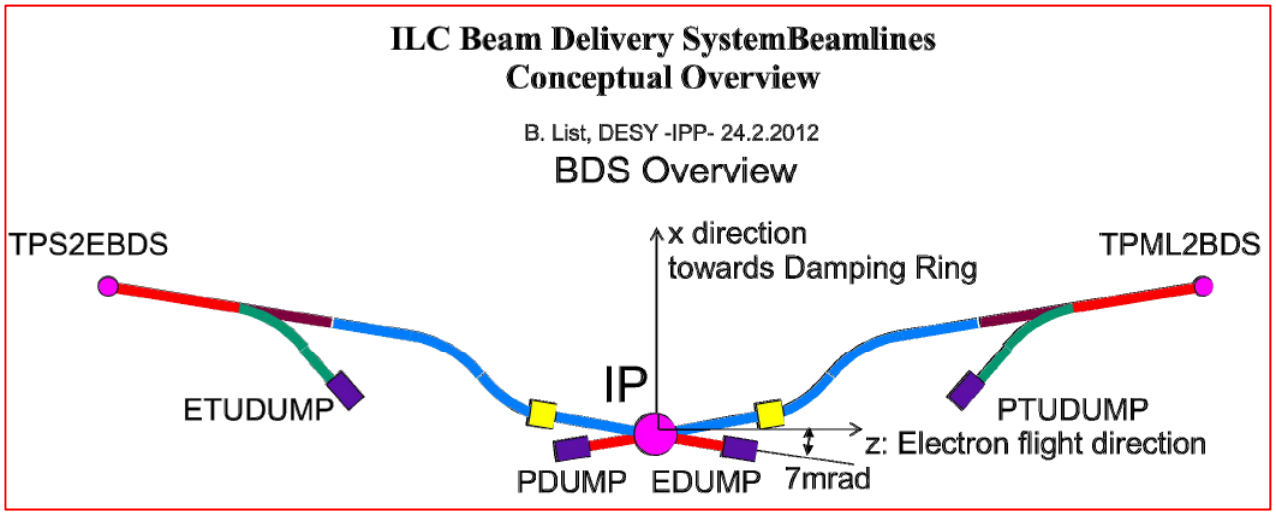

BDS tunnel layout with single tunnel

Under Discussion

TDR BDS Tunnel

- 2 tunnel (based on American RDR design)
- High Cost
- Not match to Japanese site
  Difficult to make
  a lot of cable holes
  in between tunnels
  (release the water etc.)

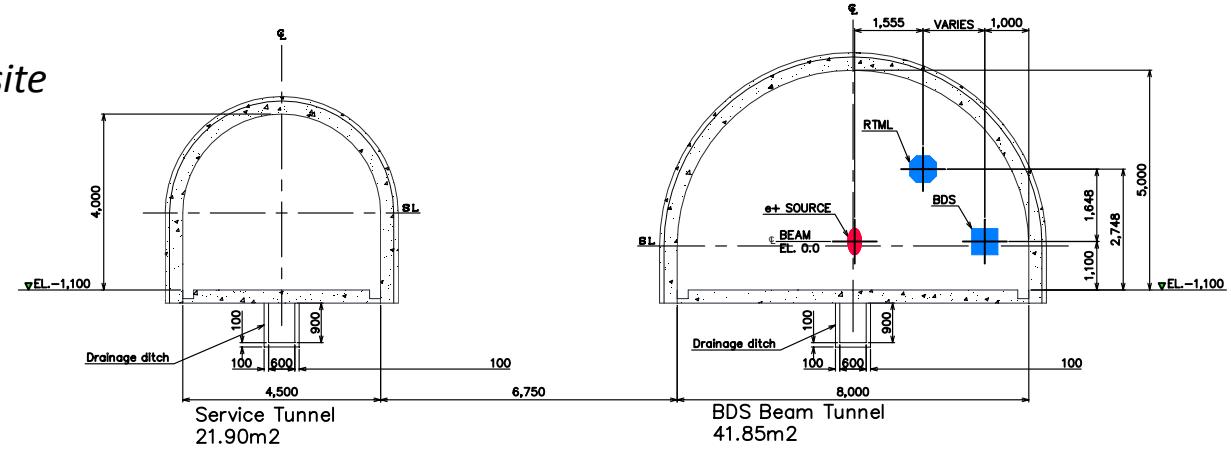

Integrated option

-We need 2 separate area
to make emergency access paths.

Integrated option_1

Shield wall width :1.5 m
BDS gallery : 5.0 m
Service gallery : 3.0 m
Total 9.5 m

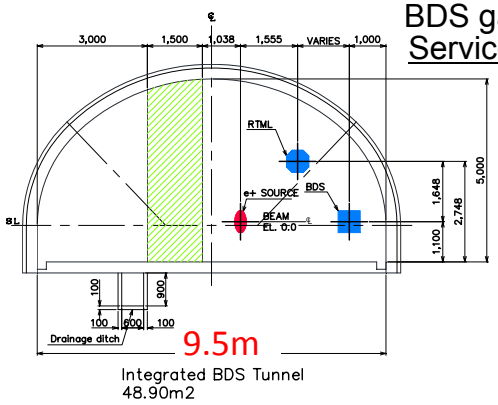

Integrated option_2

Shield wall width :1.5 m
BDS gallery : 6.0 m
Service gallery : 3.0 m
Total 10.5 m

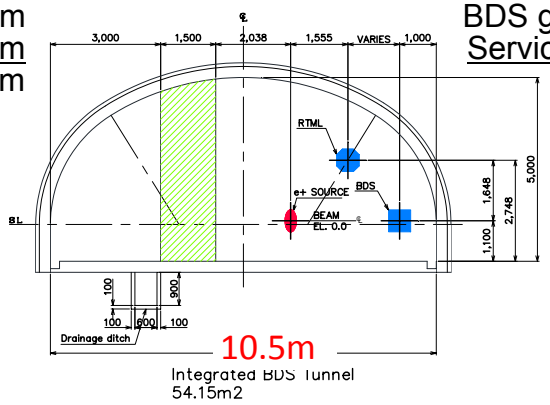

Considerations of BDS Tunnel Design

Can we remove the concrete shield ?

(Main linac is necessary
for protection from dark current at aging
even when we will not access at beam on .)

How to support the RTML beamline ?

The both side wall is far from beamline.

Is 1m space enough ?

The cooling water pipe
should be arranged to this side.

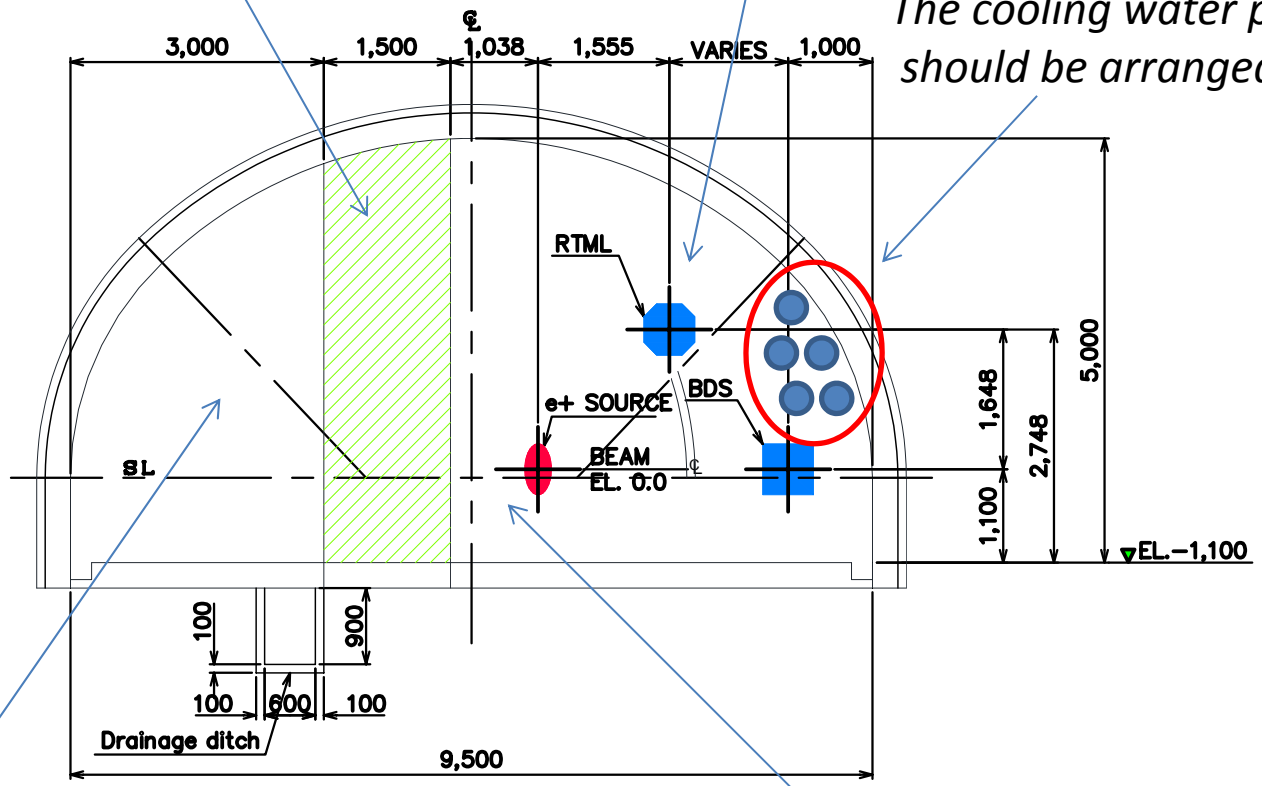

Is the service area enough ?

Integrated BDS Tunnel
48.90m2

Is the space enough for installation?

BDS beamline Length

We must fix the beamline length of BDS, not only timing issue, but also design the BDS tunnel layout.

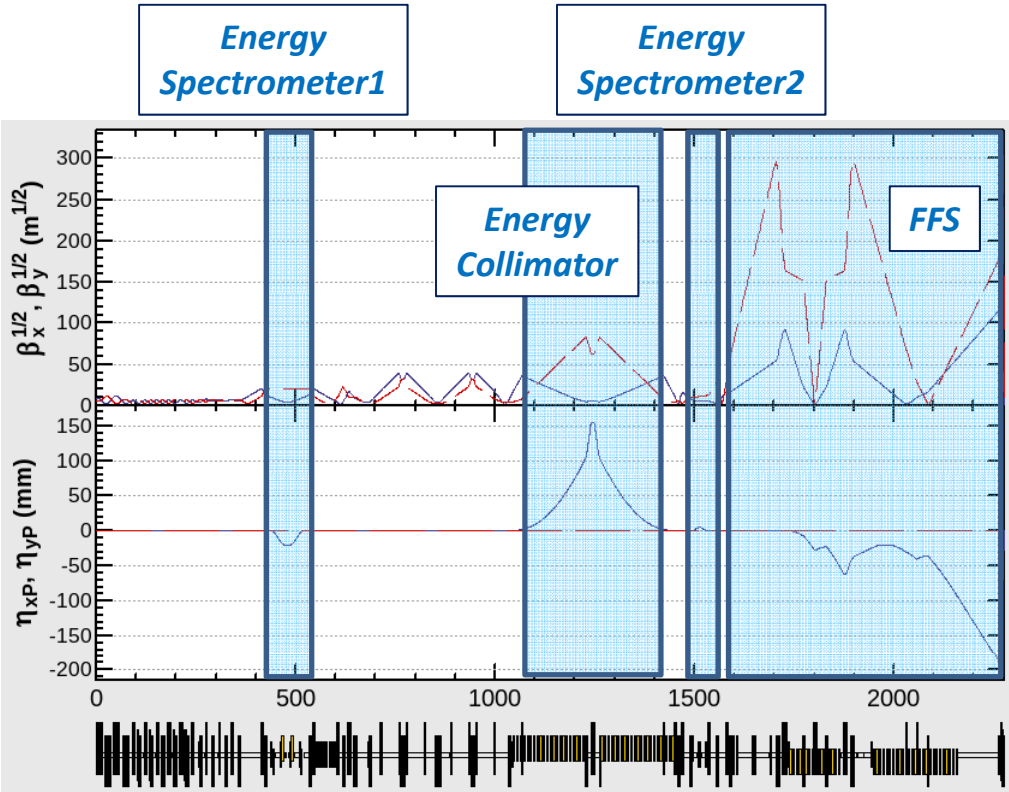

Effect of SR radiation at ECM=1TeV (Upgrade A)

	Δσp/p	Δεx
Energy spectrometer 1	10.93e-5	3.18%
Energy collimator	0.93e-5	0.26%
Energy spectrometer 2	9.03e-5	0.14%
Final Focus System	1.16e-5	0.28%

Affect to IP horizontal beam size growth

In order to avoid the chromatic aberration by the momentum spread growth by SR, the energy spread growth in final focus beamline must be

$$\frac{\Delta\sigma_p}{p} \ll \frac{1}{\xi_{x,y}}$$

The beamline length of BDS is determined by the IP beam size growth by SR at ECM=1TeV.

BDS beamline modification to update up to ECM=1TeV

The beam diagnostic section of BDS is designed up to ECM=500GeV in TDR optics deck.

The bending system for polarimeter and energy spectrometer

(Horizontal emittance growth)=12% when ECM=1Te -> 3% V
i.e.) that of Dog-leg is 4% (J.Jones and D.Angal-Kalinin at IPAC10)

ECM=500GeV

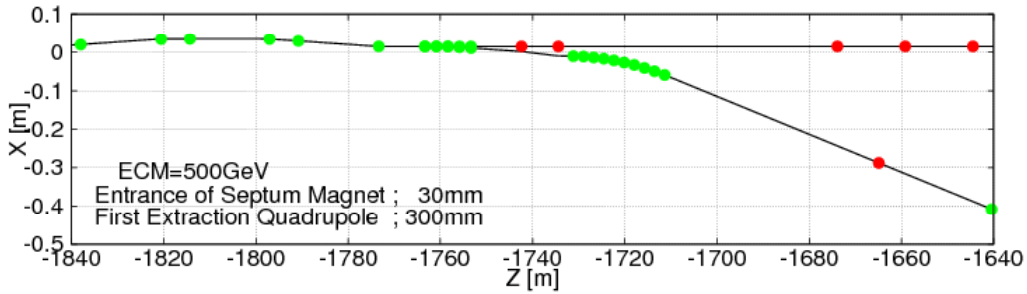

ECM=1TeV

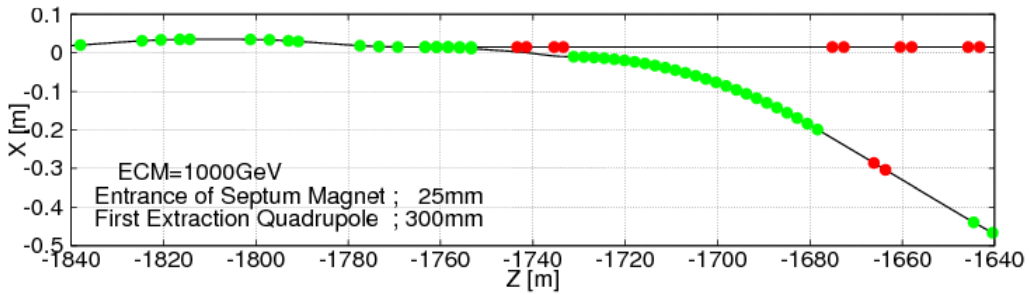

Requirement of kickers
for emergency extraction (ECM=500GeV)

- *9 kickers to abort -> 4kickers*
- *Magnetic field of 1.3kG. - > 0.85kG*
- *Pulse length of 1ms*
- *300ns rise time to full strength for emergency abort.*

The beamline length in collimator section was lengthened by 50m from TDR.

Since the specification of kicker is still difficult,
we should lengthen the beamline more in order to relax the kicker specification.

Abort System

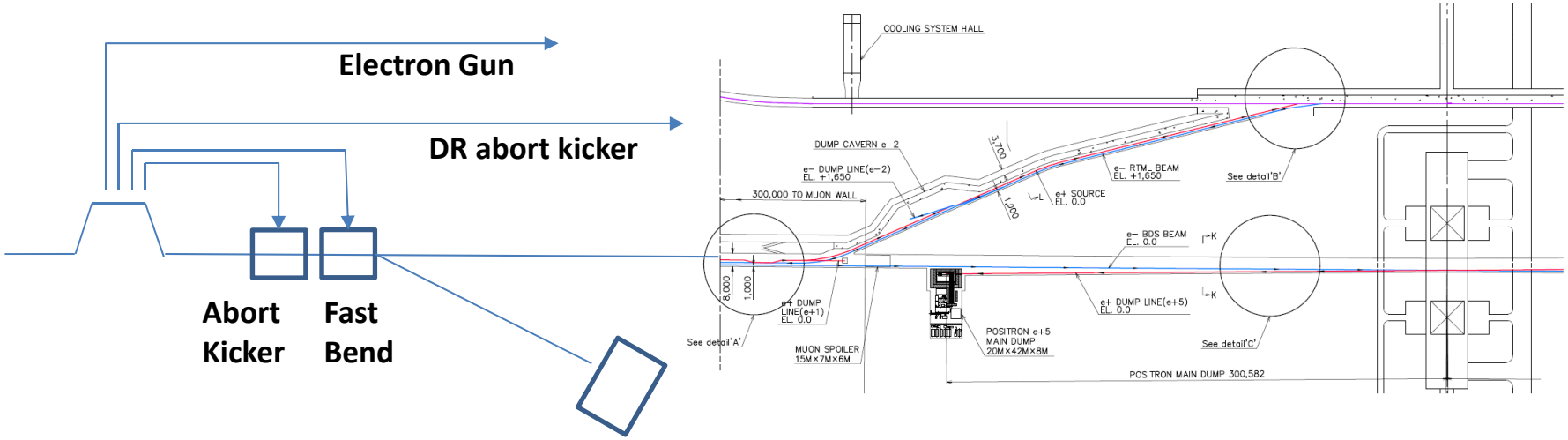

1) Abort kicker in BDS (1ms) ; dumped 100% of troubled train
   Abort kicker in DR ; dumped the last 90% of troubled train (backup)
   Beam off
   DRRF off or dump in DR
   BDS Fast bend (200ms rise time) ; dumped from the next train (backup)

Requirement of first kicker in BDS is too difficult.

2) Abort kicker in BDS (100us) ; dumped the first 10% of troubled train
   Abort kicker in DR ; dumped the last 90% of troubled train
   Beam off
   DRRF off or dump in DR
   BDS fast bend (200ms rise time) ; dumped from the next train (backup)

Requirement of BDS first kicker is relaxed to be 10%, but no backup.

3) Abort kicker in DR ; dumped the last 90% of troubled train
   BDS fast bend (first rise time) ; dumped the some troubled train and next (backup)
   Beam off
   DRRF off or dump in DR

at least 10% of the troubled train will be lost.

Magnet and PS arrangement of BDS

Beamline was lengthen by 50m to TDR design to updatable to ECM=1TeV.

ECM= 500GeV optics can be increased the beam energy up to ECM=600GeV.

The beam optics can be increased to ECM=1TeV by using same geometry.

- The most of magnets for ECM=500GeV can reuse to 1TeV optics.
- Some new magnets should be installed to extend to ECM=1TeV.

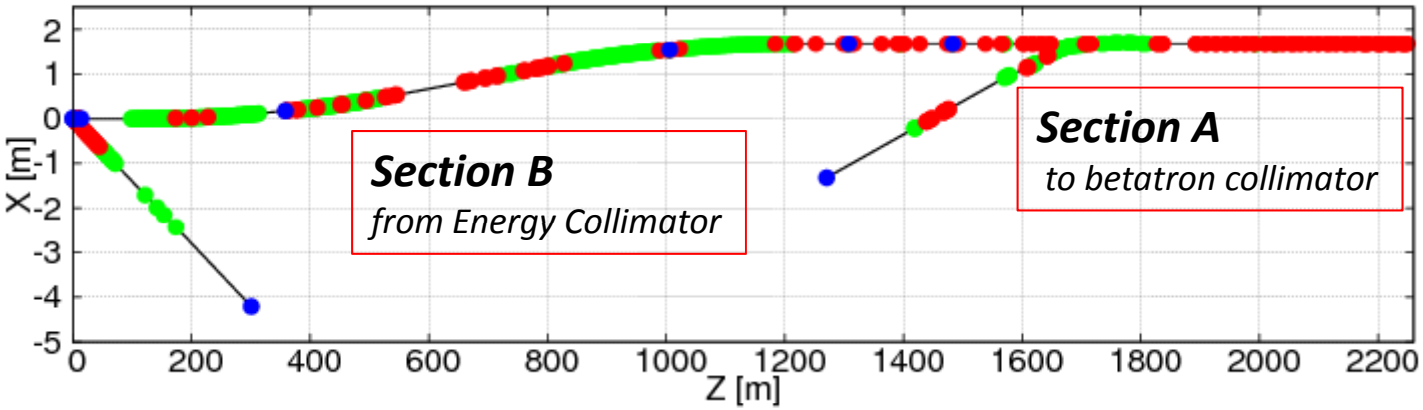

Number of components in BDS beamline (Dump line is not counted.)

	Energy [GeV]	# of BEND	# of QUAD	# of SEXT	# of Steer	# of PS	# of Mover	# of BPM
Section A	500	16	64	0	19	73	70	78
	1000	43	108	0	19	115	108	116
Section B	500	63	33	7	55	46	40	101
	1000	176	41	7	55	56	48	112

We need at least two 200m long access areas for magnet PS and movers for BDS beamline.

We should design the access tunnel layout for beam diagnostics.

Integration of beamlines

We have a lot of beamlines in BDS area.

- *BDS beamline*
- *RTML*
- *Positron Booster Linac*
- *Electron Source*
- *Tuning dump line*
- *Main dump line*

We should arrange not only BDS beamline, but also above beamline in BDS area tunnel.

Arrangement of Positron Booster Linac

Integration of positron source is necessary.
(not only accelerator tunnel, but also PS station and installation of equipment)

- *Tunnel layout for positron source area, and how to share the service tunnel to BDS*
- *The arrangement of the components*
- *Installation scheme and plan*
- *conventional facilities for positron source*

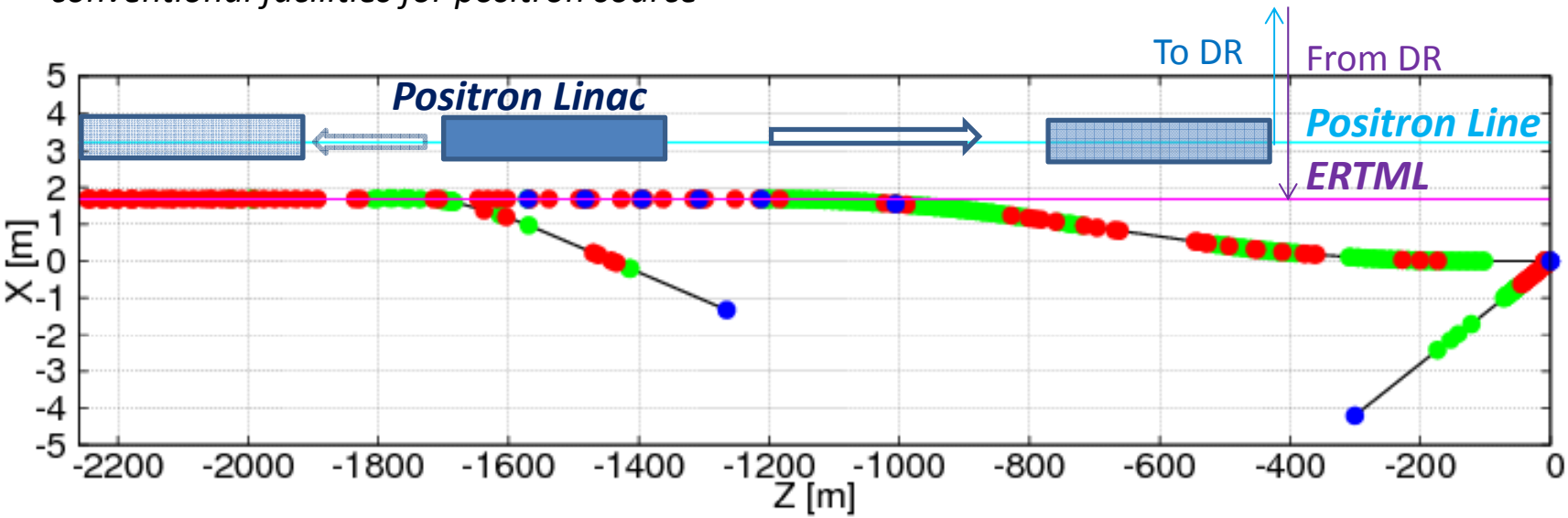

Positron booster linac is arranged after 400m long low-energy beam transport.

The present design of the positron linac was arranged to very downstream of BDS tunnel.

We can move the positron booster linac as beam dynamics aspect.

I want to move the positron booster linac to upstream.

Tunnel Cross Section of Positron Linac

ML Tunnel

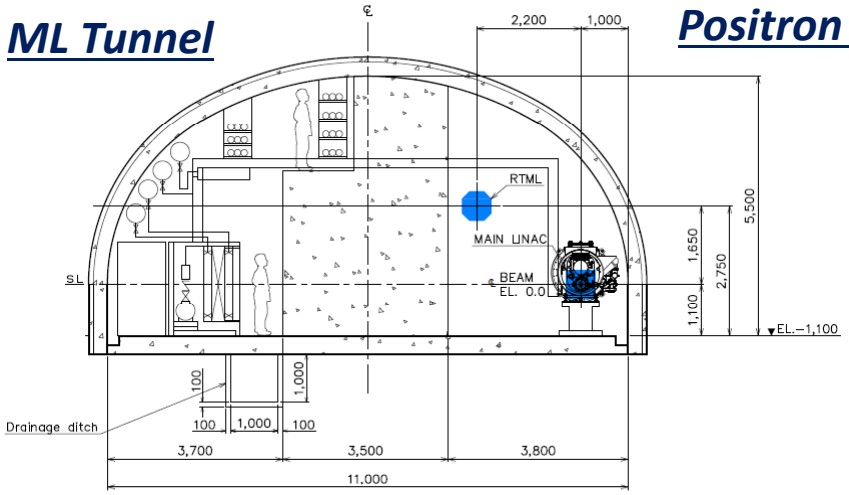

Positron Booster Tunnel

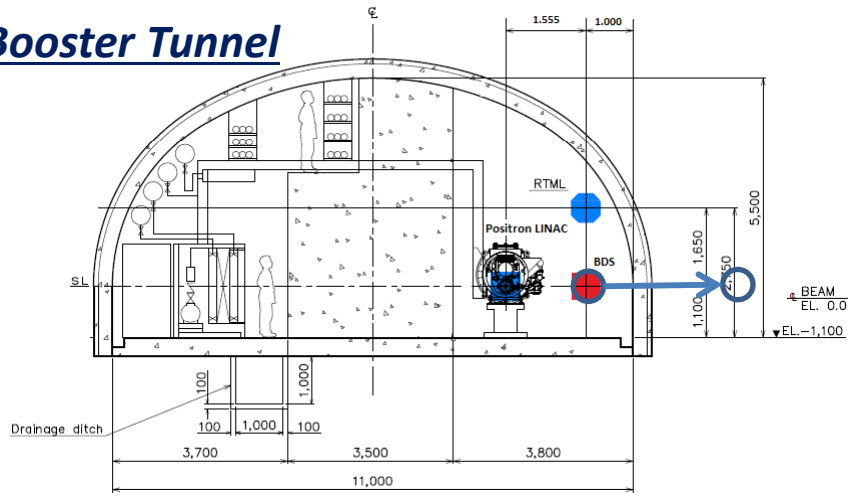

The present location of positron linac was same location to the tuning dump line.

The tuning dump line was out of range of ML tunnel.

If we can move the positron linac to upstream,
we can put the positron linac by extending ML tunnel.

But, the decision should be done by taking account of
the arrangement of cryo-system for booster linac.

Other Consideration of Positron Source Area

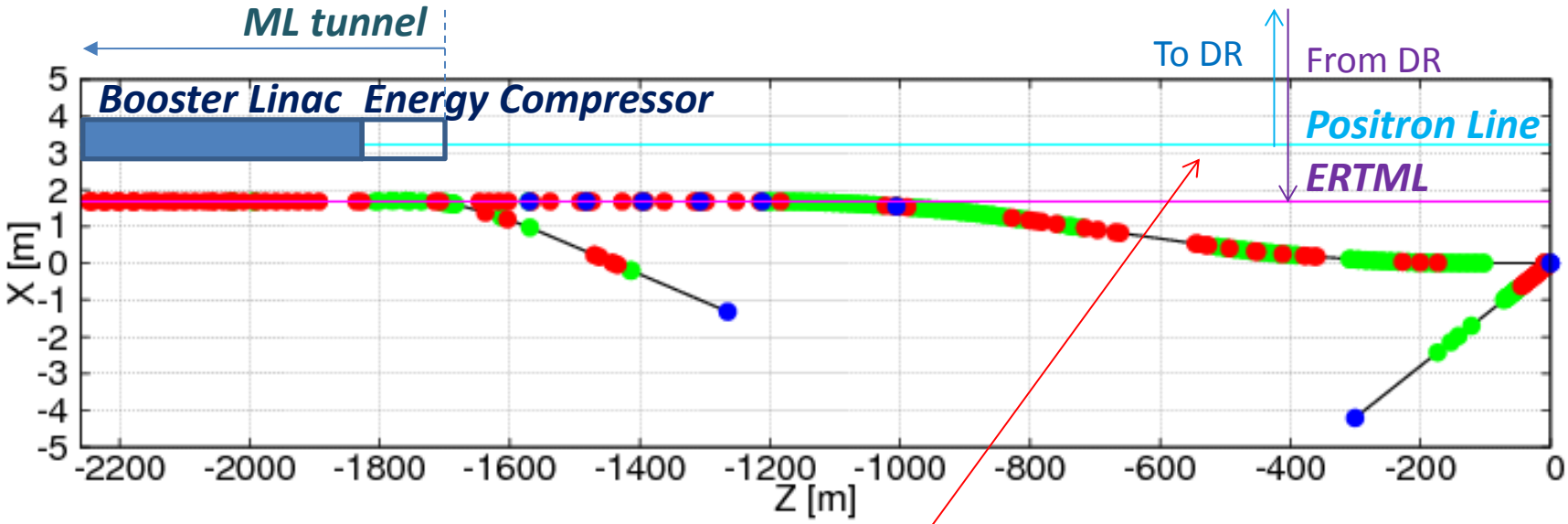

Path length adjuster (150m long ?)

In present design, the energy compressor is located just after booster linac.

Therefore, when we put the path length adjuster after the energy compressor, there are very small impact the R56 generated by the bunch length adjuster, which consists of simple chicane system to the positron beam.

We should integrate the path length adjuster to very end of BDS beam line.

Will we make the compatible tunnel design of undulator and conventional positron sources?

We need the tunnel cross section, not only beamline, but also klystron, modulator etc.

Arrangement of Electron Source

Integration of electron source is necessary.
(not only accelerator tunnel, but also PS station and installation of equipment)

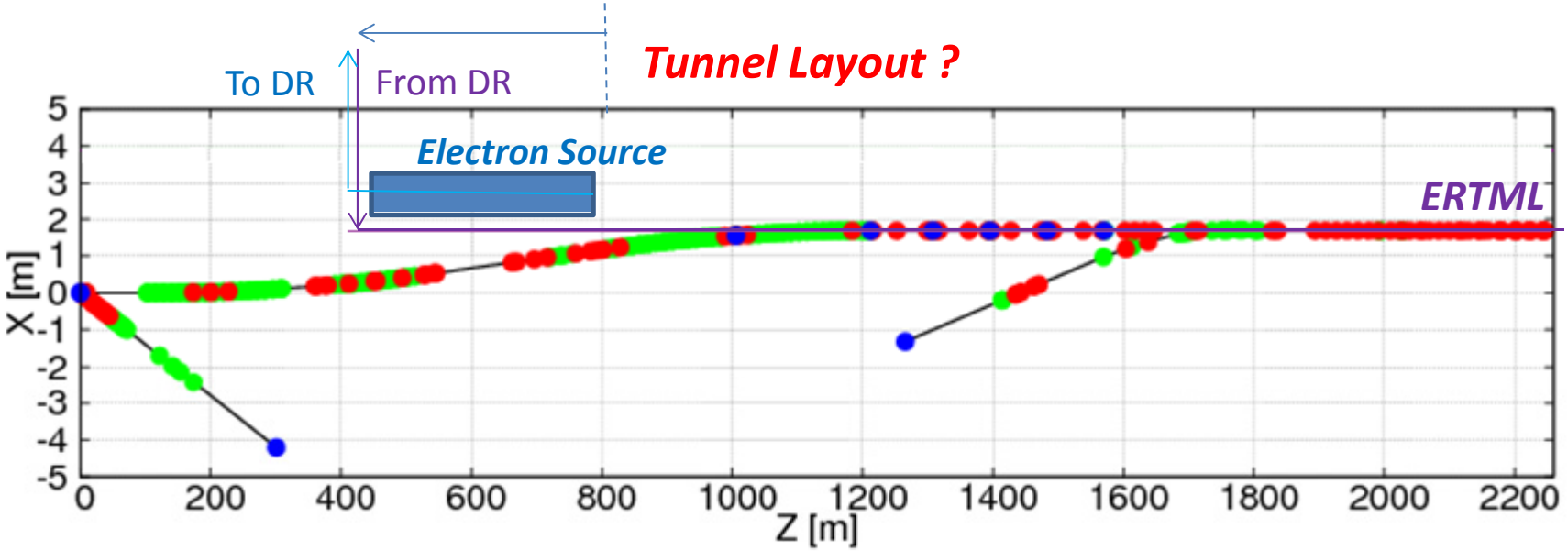

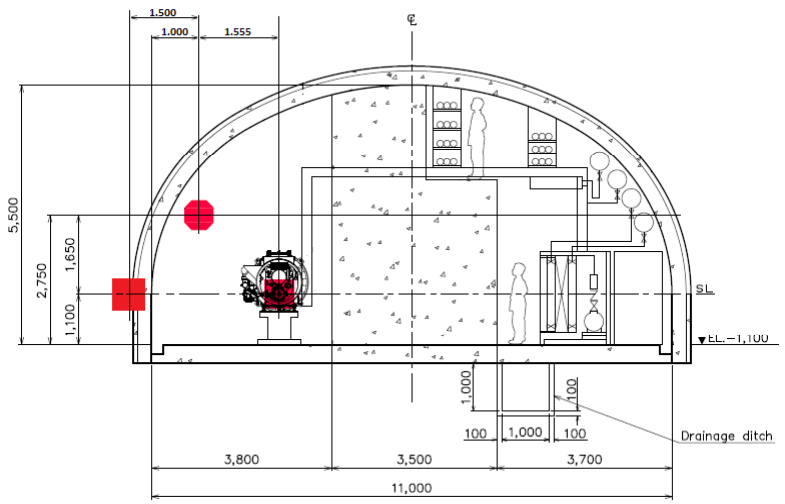

Electron source area requires
wider accelerator tunnel than Main LINAC.

We must design where to provide the He ?

Tunnel layout around tuning dump

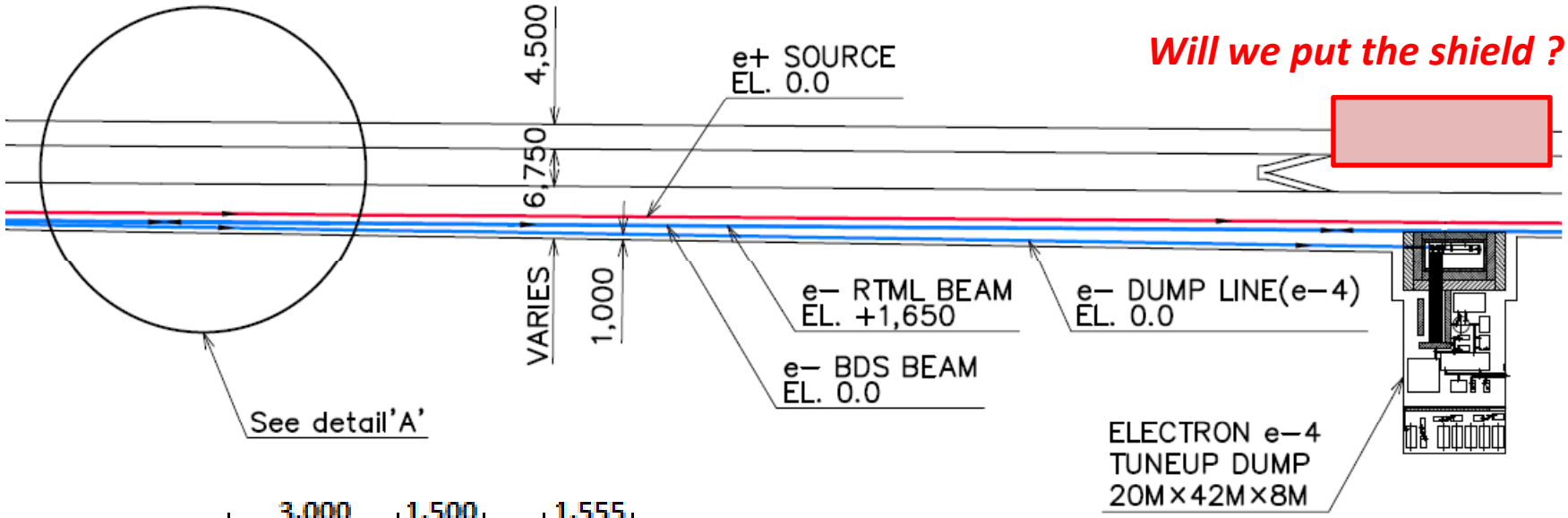

Will we put the shield ?

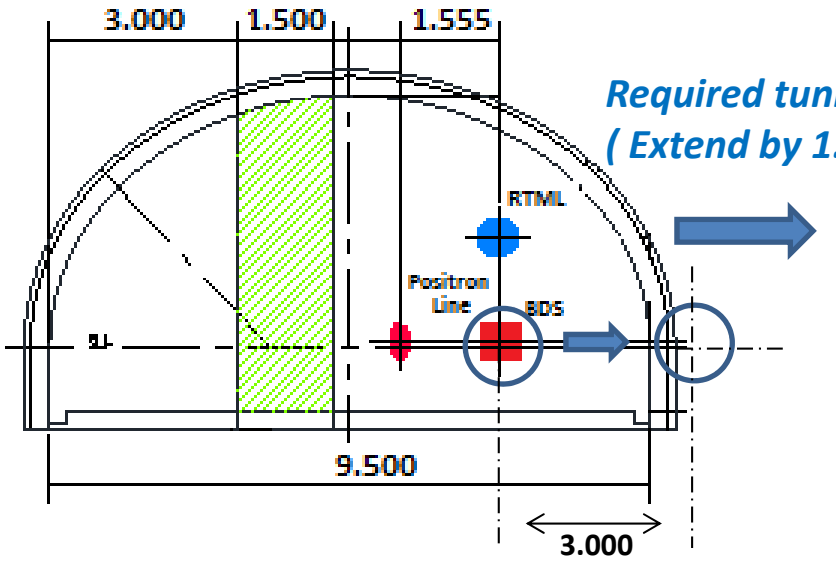

Tuning Dump Line

Required tunnel width is 6.5m.
(Extend by 1.5m around dump ?)

Will we put the shield to access tunnel around tuning dump ?

Will we extend the shield width around tuning dump?

Tunnel layout around main dump

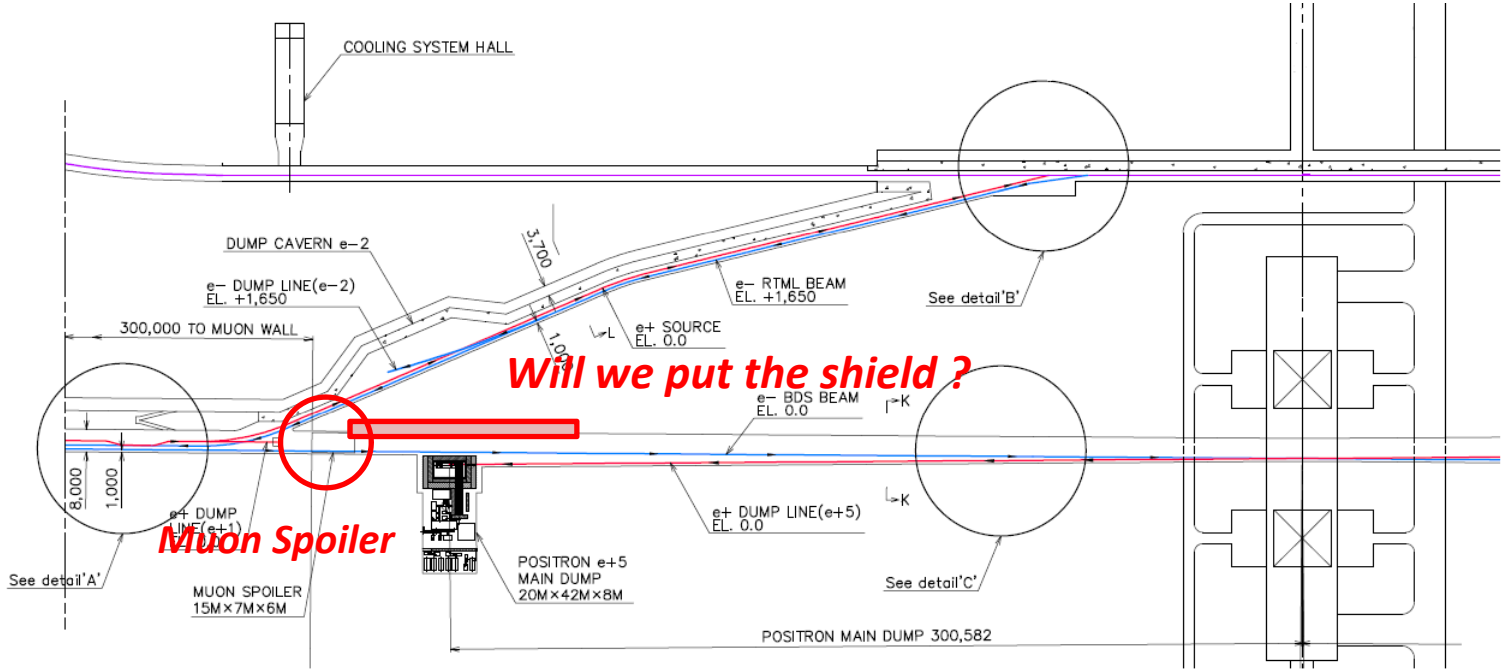

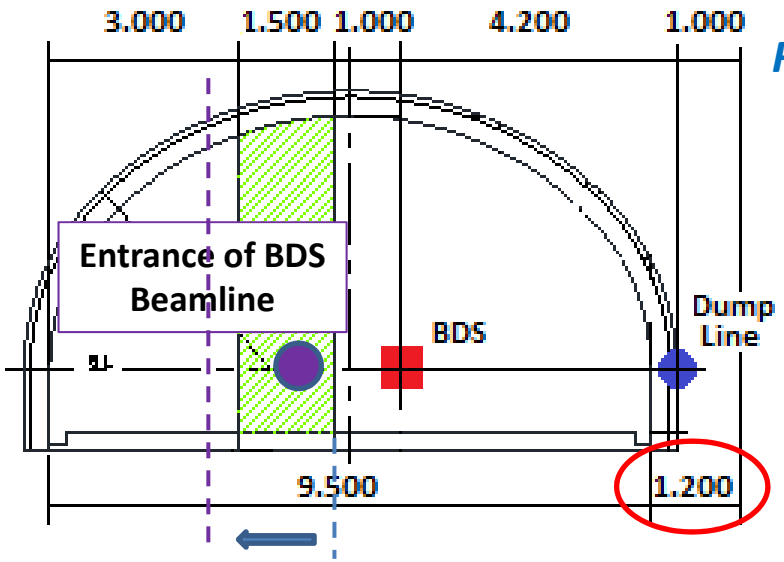

Required accelerator tunnel width is 6.2m maximum.

Extend to straight line of BDS entrance ?

Will we put the shield to access tunnel around tuning dump ?

Will we extend the shield width around tuning dump?

Will accelerator tunnel extend to the straight line of BDS entrance ?

- *Shorten the access tunnel ?*
- *Widen the tunnel ?*

Muon Spoiler

The cress section of Muon Spoiler is wider than accelerator tunnel.

How to install the Muon spoiler ?

What is the installation schedule of Muon spoiler and other equipments in beamline ?

How to arrange the access tunnel around Muon spoiler ?

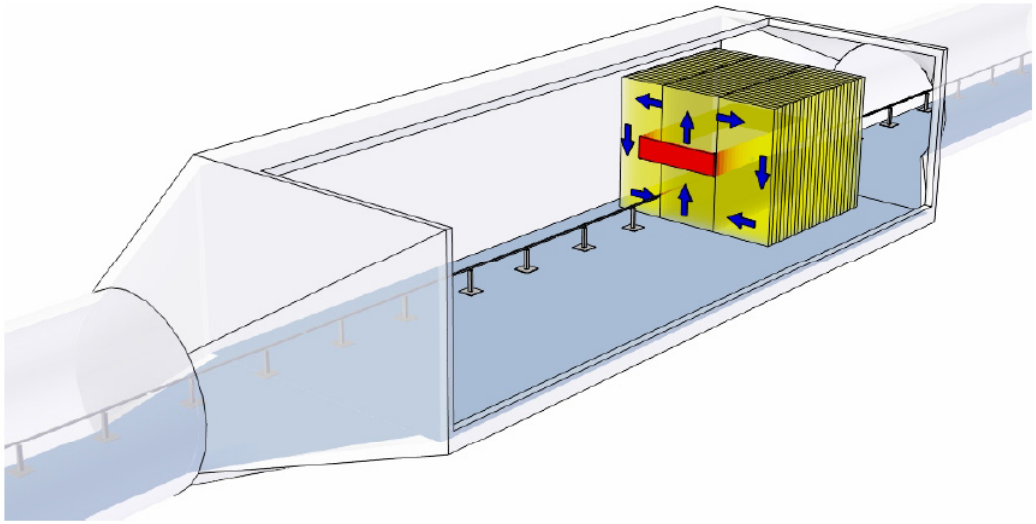

Summary

We just started the design of the tunnel layout for BDS section.
We will fix the BDS tunnel layout within 1 year.

Many beamlines are arranged in the BDS section.

- *BDS beamline*
- *RTML*
- *Positron Booster Linac*
- *Electron Source*
- *Tuning dump line*
- *Main dump line*

(- Conventional Positron Source)

Most part of BDS tunnel is irregular cross section,
it is difficult to define only with a standard tunnel shape.

Summary – cont.

We would like to thank to

- *ILC BDS group*
- *Takashi Naito, Nobuhiro Terunuma (Beam abort sytem)*
- *Mark Woodley (overall beam optics)*
- *Feng Zhou, Wanming Liu (Positron Source)*
- *Hirotaka Nakai (Cryo-system)*

to tell us the helpful beamline information.

We wish to have continuous communications with all of you (not only above) to design the BDS tunnel layout.

Could you please tell us the information about above beamline. (not only beamline layout, but also PS, monitor stations and installation etc.)

Shall we discuss across the group!

Backup

Emergency Beam Abort

In order to shorten the beam line length,
the combined extraction line was designed for abort extraction system.

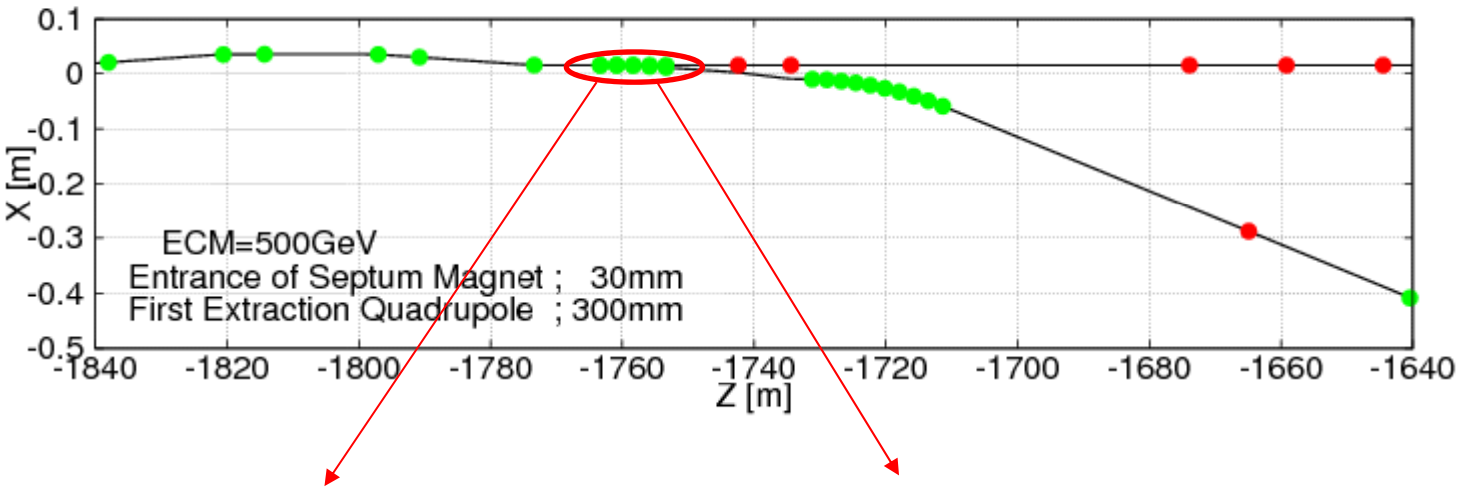

Pulsed bend for beam abort

- tuned on the 1 bending magnet
to abort the next bunch to tuning dump

kickers for extraction

- 9 kickers to abort - > 4 kickers to abort
- Magnetic field of 1.3kG. - > 0.8kG
- Pulse length of 1ms
- 300ns rise time to full strength for emergency abort.

If we shorten BDS beamline more than 150m from TDR…

Bending Magnet Section in FFS & Energy collimator

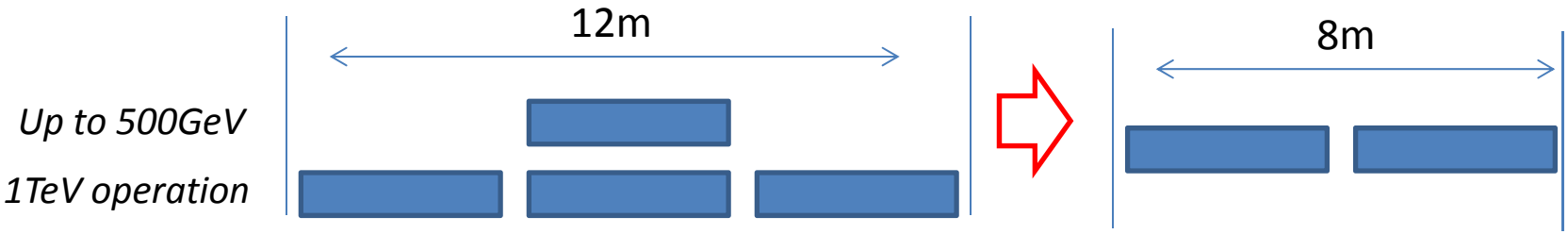

Present design (presented by T.Okugi at LCWS2014)

$$L_1 \rightarrow \frac{2}{3} L_0$$

(Shorten the beamline) = 57 x 4m = 228m

$$\rho_1 \rightarrow \left(\frac{3}{2}\right)^2 \rho_0$$

Bending radius will be increased to keep the same dispersion at FD.

Energy spread generated by SR

$$\frac{\sigma_{E,SR}}{E} \propto \frac{E_1^3 L_1}{\rho_1^2} = \left(\frac{3E_1}{2}\right)^3 \frac{L_0}{\rho_0^2}$$

$$\boxed{E_1 = \frac{2}{3} E_0}$$

If we reduce the maximum BDS energy to ECM=600-700GeV, we can shorten the BDS beamline more than 200m.

But, since the chromaticities at quadrupoles were changed by this modification, the optics cannot design by simple scaling.
We must redesign the FFS optics (a couple of months ?) .
Will we try to design the shorter BDS beamline ???

Beam Monitor Station

Laser rooms

BDS area id required to put a lot of lasers for beam diagnostics (laser wire and polarimeter).

Since the specifications of lasers strongly depends on the background level,
the evaluation of the background level is very important to design the laser room*.*

We have two choice of the laser room.

1) Put near by the monitor (conventional method).
The tunnel extension for laser room is required (expensive at construction).

2) Put the laser to central area and transport with fibers.
The R&D is necessary (expensive at design stage).

BPM stations

We have two choice of the BPM stations.

1) Put the LO signal and BPM station every few 100m (conventional method).

2) Make a BPM station and transport the signals with fiber cable to reduce the transport loss.
The R&D is necessary (cheep at construction, but expensive at design stage)

Collimator Section

Beta Function at SP2/SP4 = (X; 1000m / Y; 1000m)
Beta Function at SPEX = (X; 36m / Y; 4000m)
Phase Advance (SP2 / IP) = (X; 7.0 pi / Y; 6.0 pi)
Phase Advance (SP4 / IP) = (X; 6.5 pi / Y; 4.5 pi)
Phase Advance (SPEX / IP) = (X; 5.0 pi / Y; 3.5 pi)
EtaX at SPEX = 0.145m

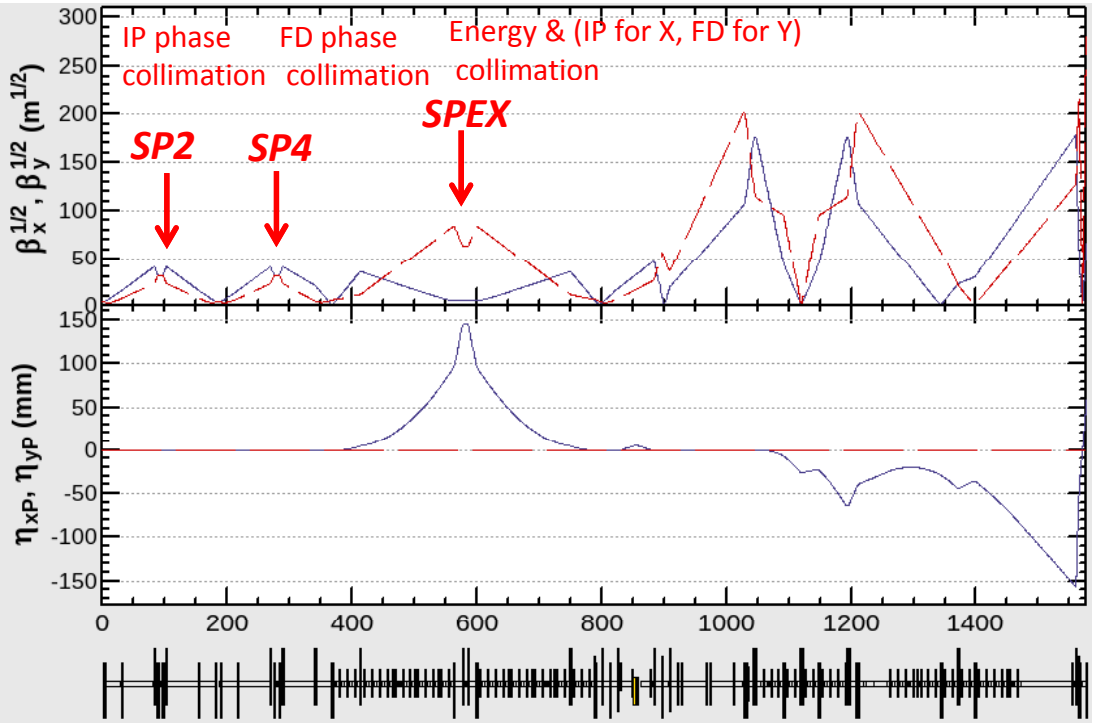

Apertures for every collimators were designed to 2-3mm full gap.

When we shorten the beamline length of the collimator section, the gaps of collimators will be smaller than present design.