Summary of Source WG

LINEAR COLLIDER COLLABORATION

Designing the world's next great particle accelerator

Wei Gai(ANL)
Steffen Doebert(CERN)
Masao KURIKI (Hiroshima University)

Source WG

- Two of half-day sessions
  - 5 contributions for Undulator e+
  - 5 contributions for E-driven e+
  - 1 contribution for Laser Compton e+
  - 1 contribution for polarization physics

- One Accelerator Plenary Session for the CR
  - CFS of electron BDS is compatible to accommodate both Undulator and E-driven positron sources

Summary of Summary

- Design of Undulator Source is matured, but the technical implementation of the target and matching device are still open questions.
- Design of E-driven Source has made. Many studies are being made to improve the design. The target prototyping is on-going.
- CR11 is proposed. It is a good starting point to integrate the ILC positron source with “ the ILC system”.

Undulator ILC Positron source

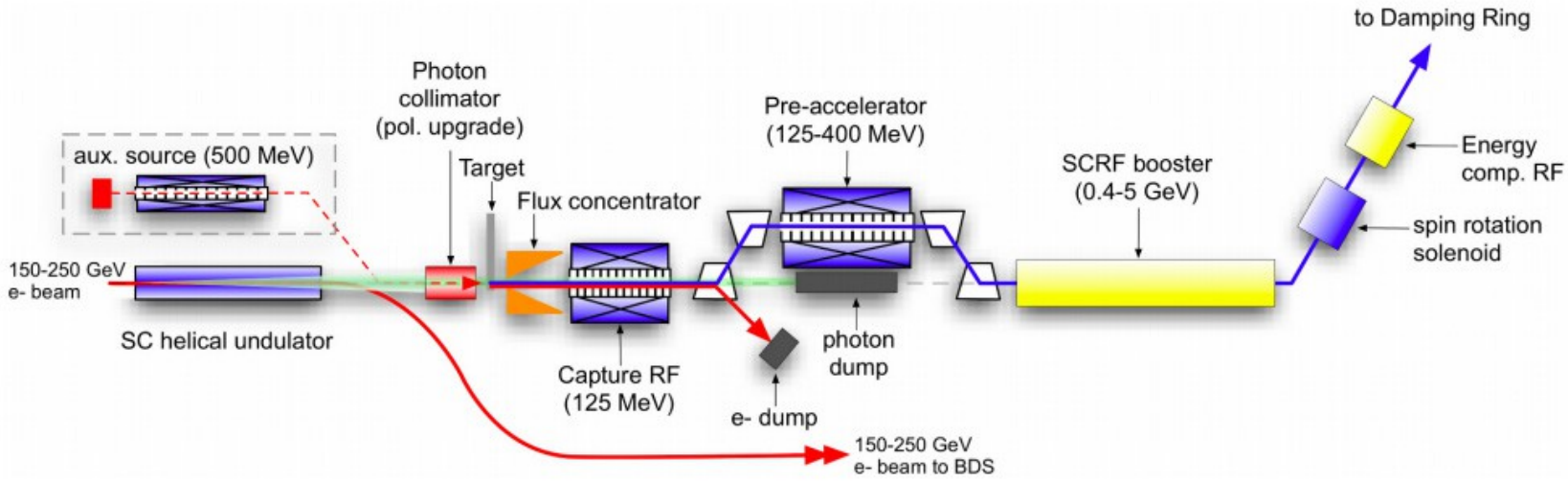

Figure 3.4. Overall Layout of the Positron Source, located at the end of the electron Main Linac.

- 147m active undulator length, additional 73.5m is reserved for the polarization upgrade.
- 500m drift space between the undulator and target.
- NC RF up to 400 MeV for capturing.
- SC RF up to 5 GeV
- Energy Compressor
- Spin rotator (SC solenoid)

Contact Cooling Target (W. Liu)

- Proposed by W. Gai as a replacement of water-cooling target.
- Heat is removed by touch pad with Mo-S lubricant.
- A pilot experiment in air shows good features and a test in vacuum will be made.

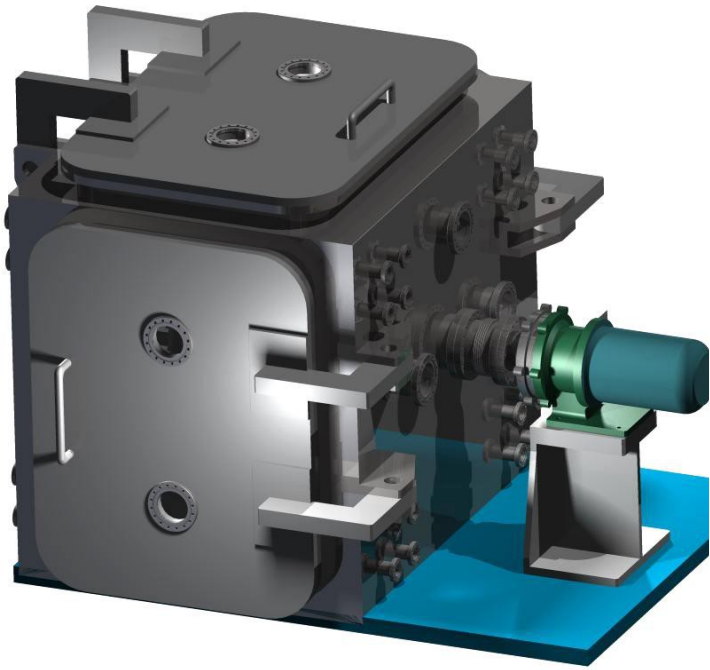

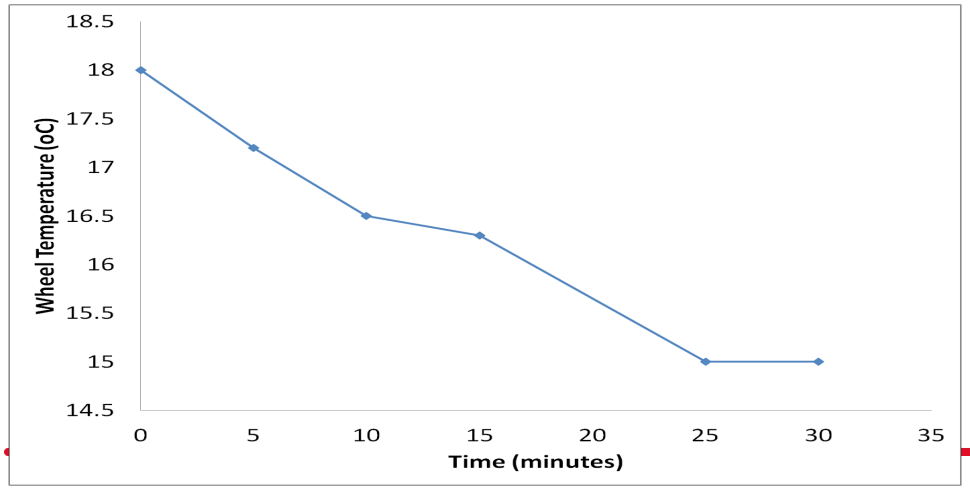

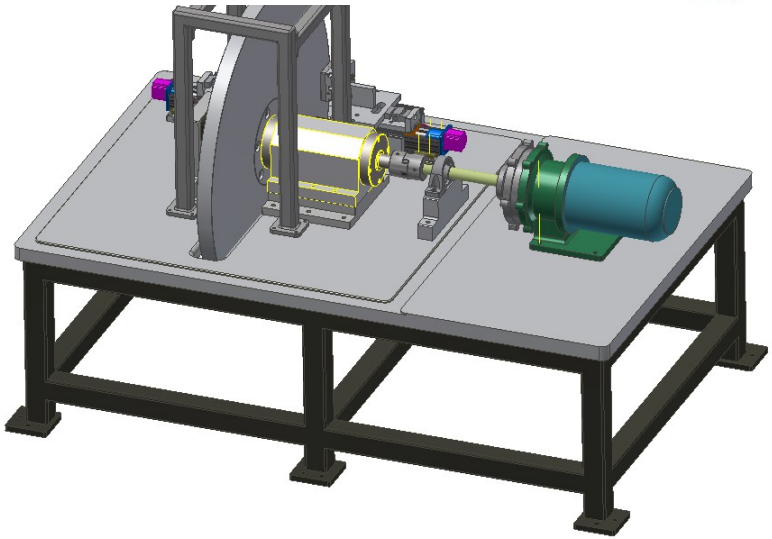

Radiation Cooling Target (S. Riemann)

- Thermal heat is removed by radiation .
- Temperature and stress is manageable.
- Seeking chances of prototyping.

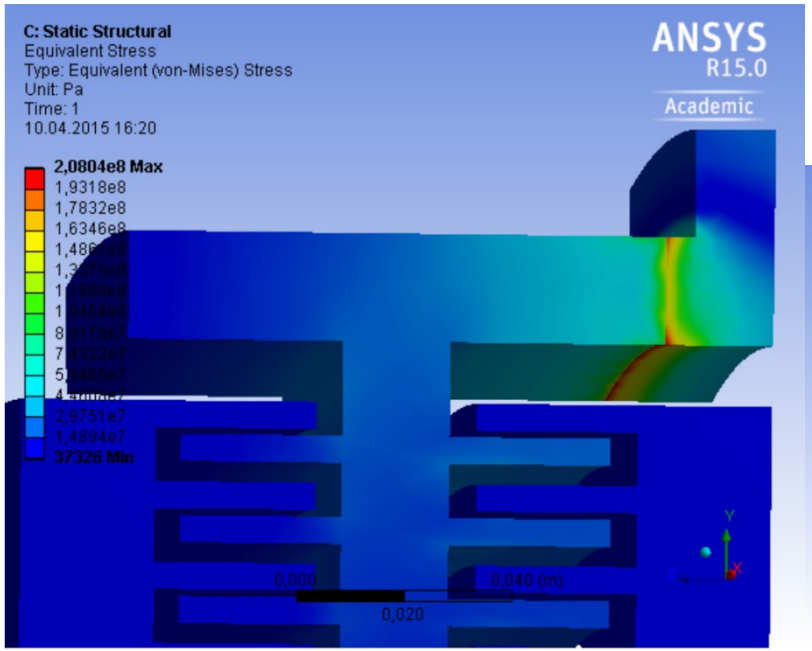

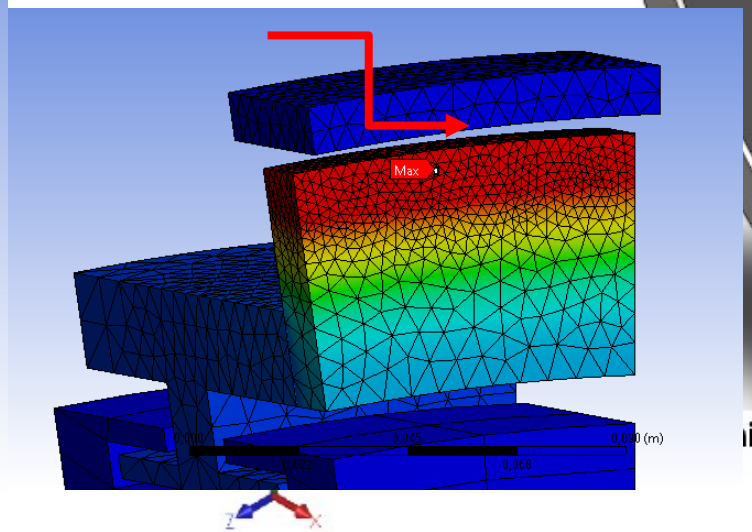

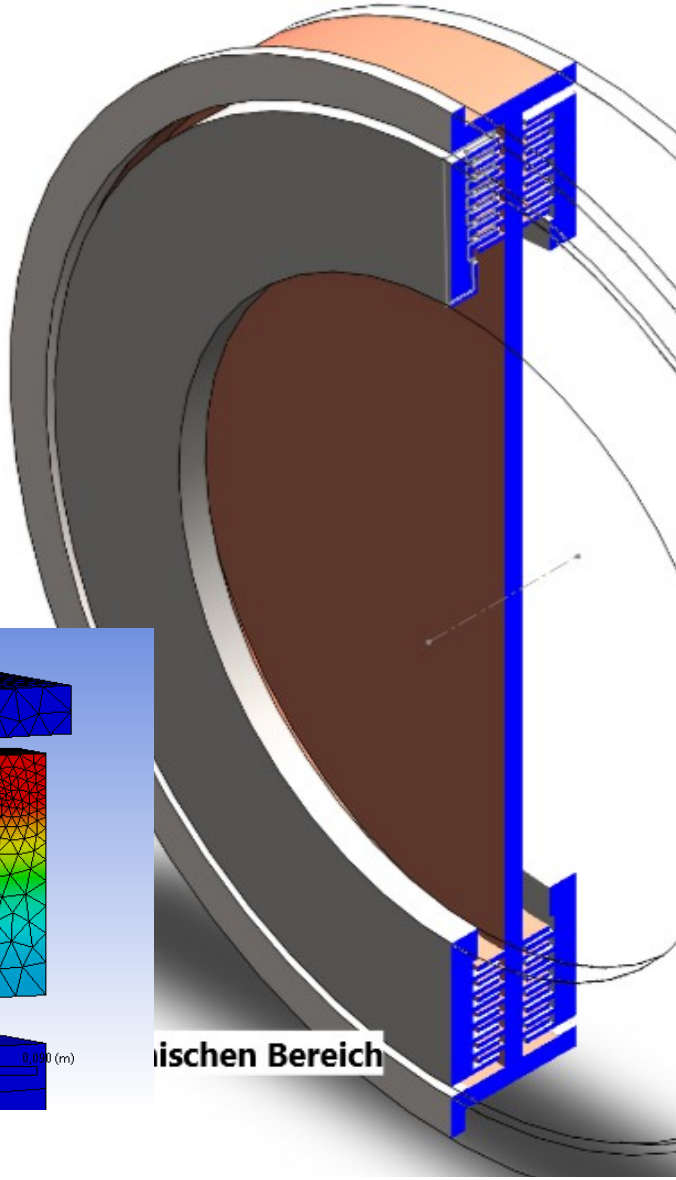

Radiation Cooling Rotor Target (M. Breidenbach)

- Eliminate water in the vacuum space by radiation cooling.
- Eliminate rotating shaft seals by magnetic suspension and rotational drive, with the coils outside the chamber.
- Use titanium (Ti-SF61) for the actual rotating hoop (Rin = 50 cm; Δr = 10 cm; t = 14 mm; f = 2000 rpm)
- For 600 C hoop to 25 C water cooled vacuum can, ε = 0.6, P = 13 kW> 7.5kW target heat load.

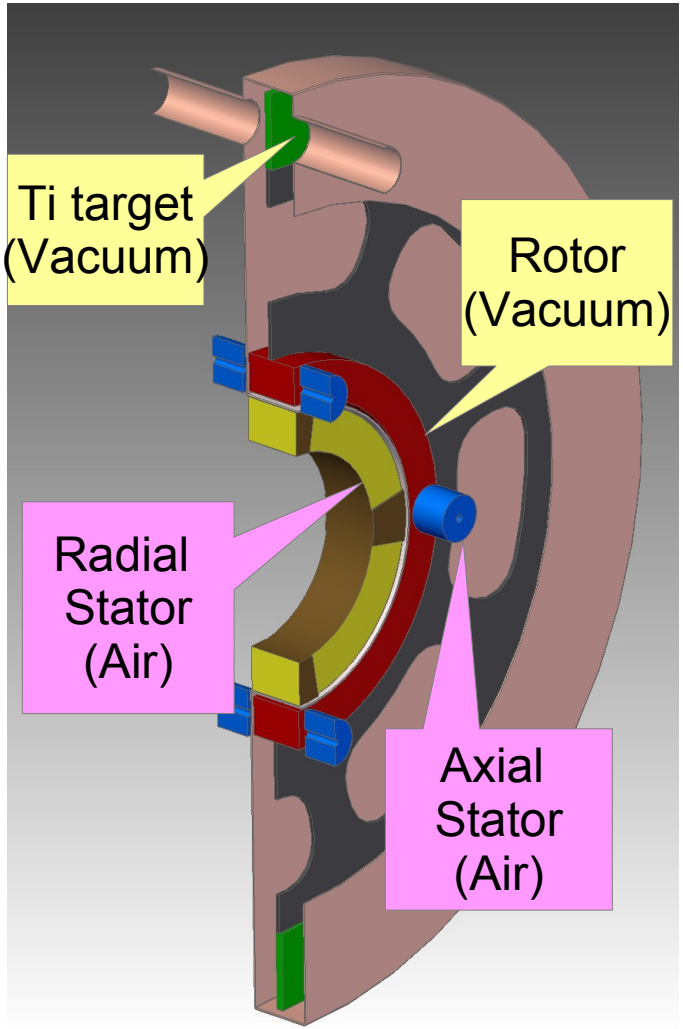

Low K and Multi-Target system (A. Mikhailicenko)

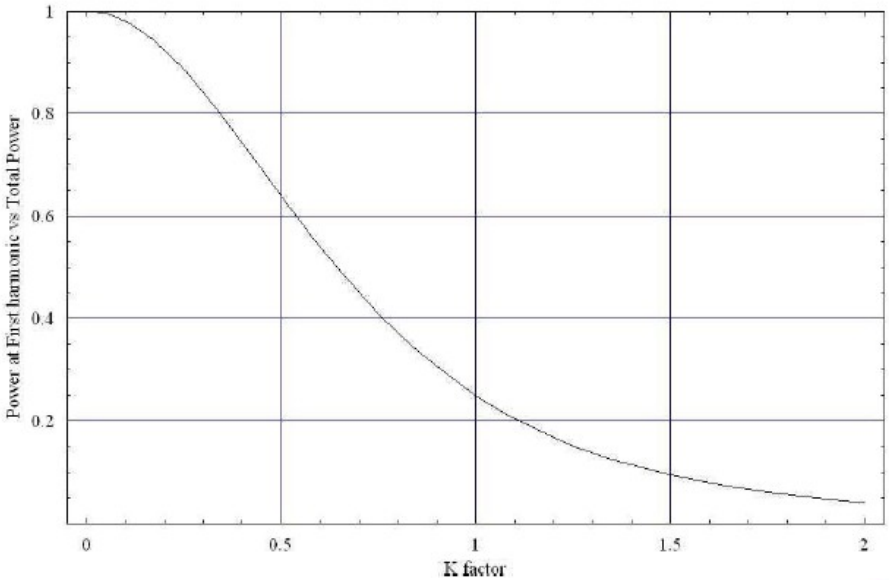

- Less fraction of higher harmonics
- Higher polarization up to 90 %
- Less radio activation
- Multi-target for high efficiency

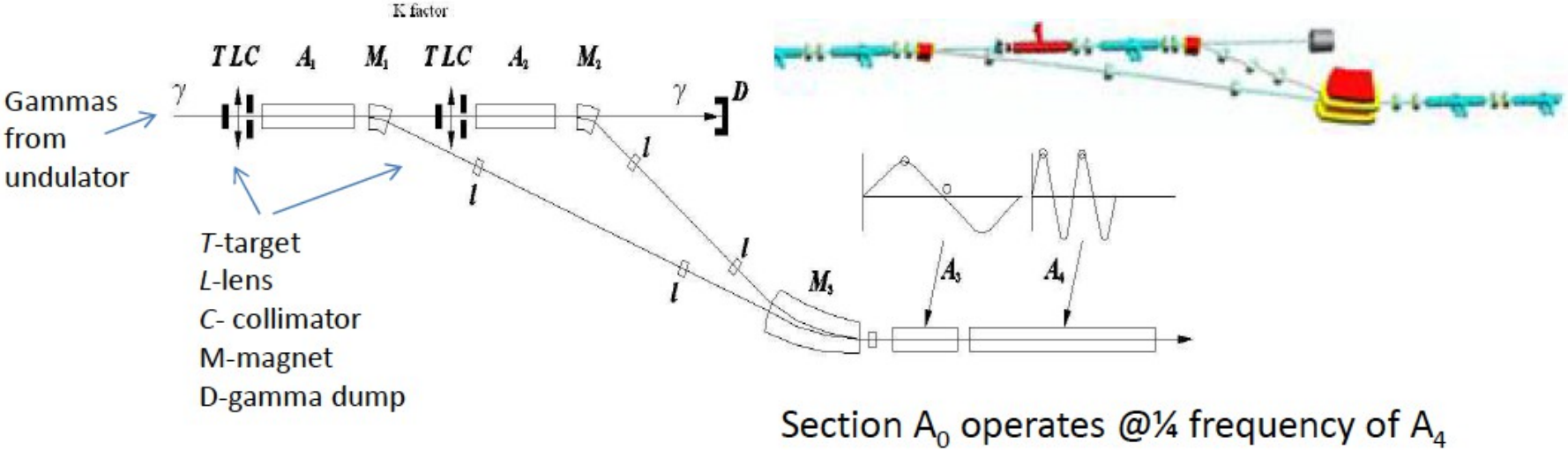

Radiation Dose in the target area (A. Ushakov)

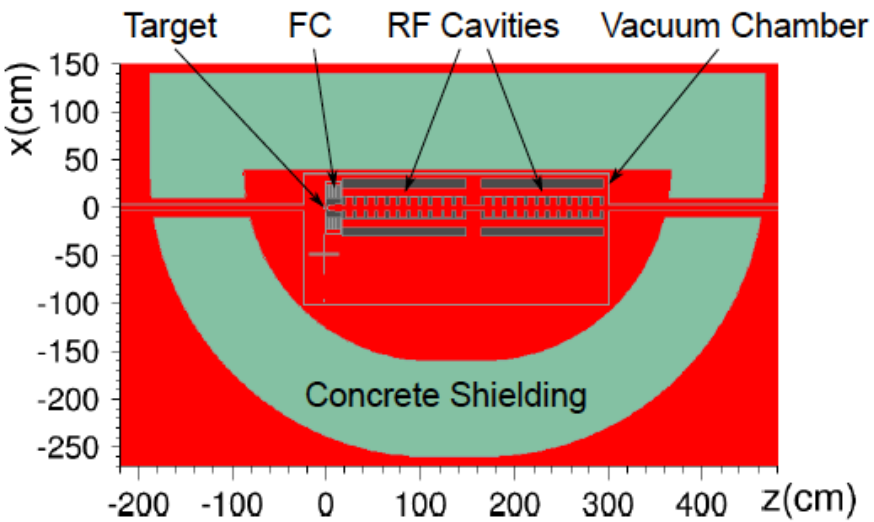

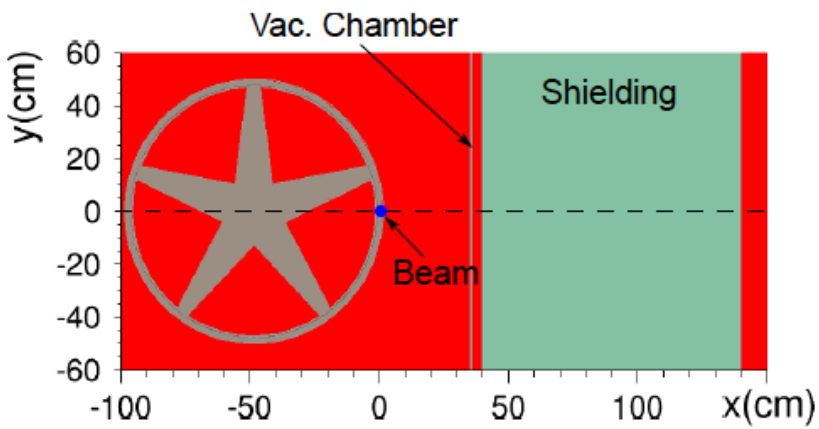

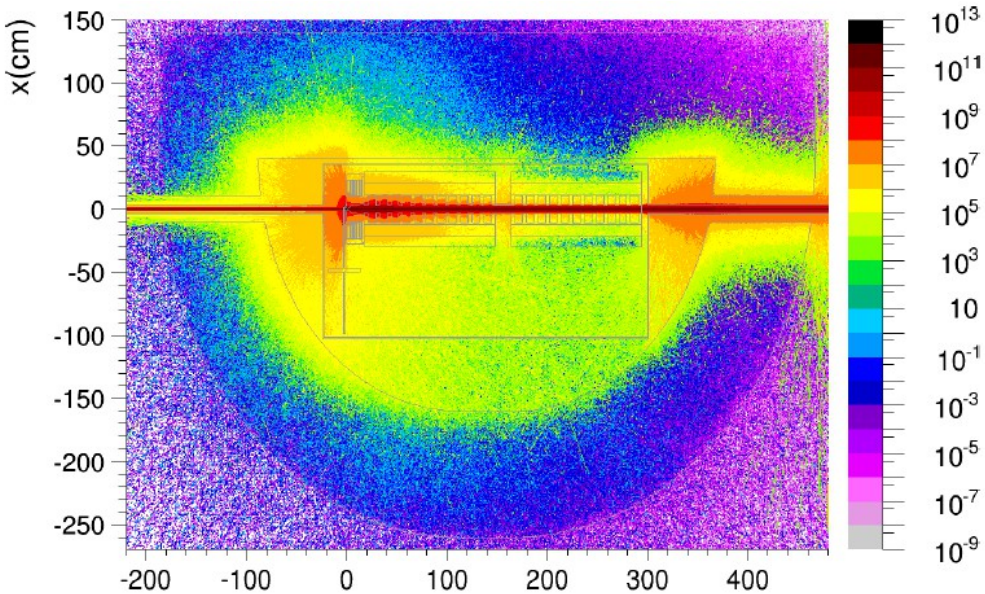

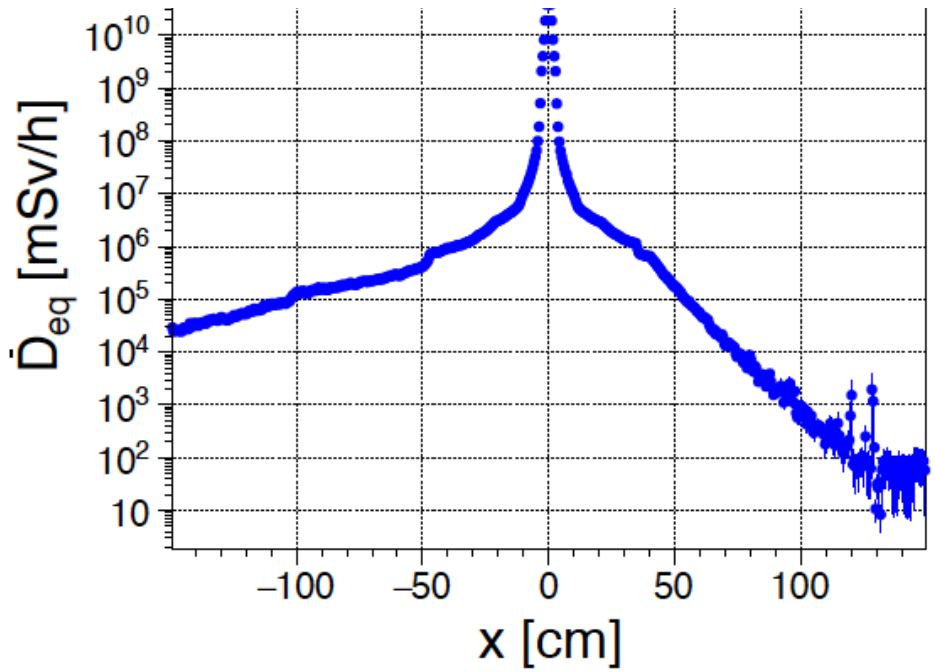

E-driven ILC Positron Source

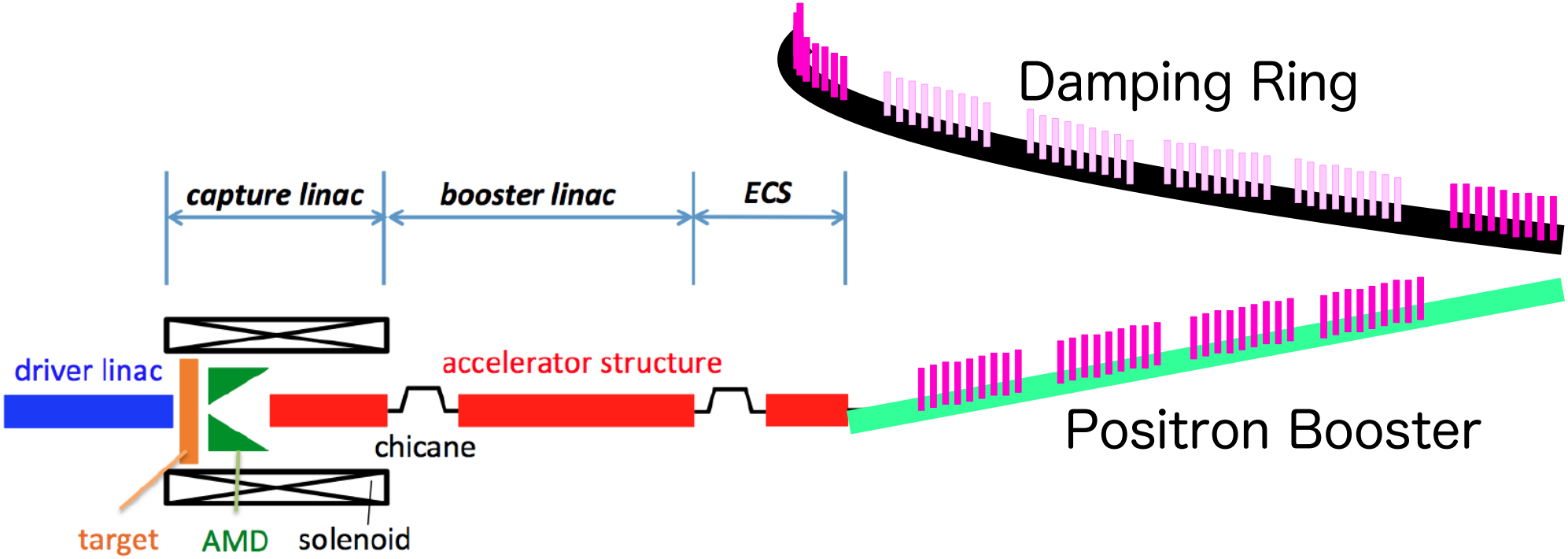

Electron Driver
456.8 m

Positron Target
Capture Linac
43m

Positron Booster
531.2m

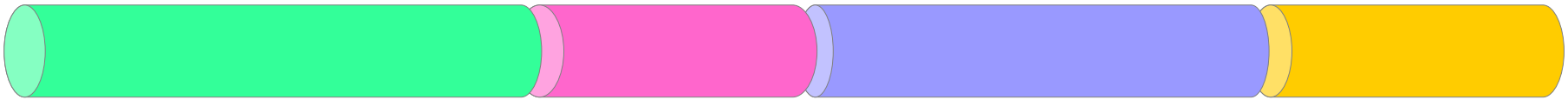

Total : 1110.2 m

ECS
75.2m

Target (T. Omori)

- W-Re 14mm thick.
- 5 m/s tangential speed rotation (220 rpm, 0.5m dia.) in vacuum.
- Ferro-fluid vacuum seal is robust against radiation damage.
- Prototyping is on-going.

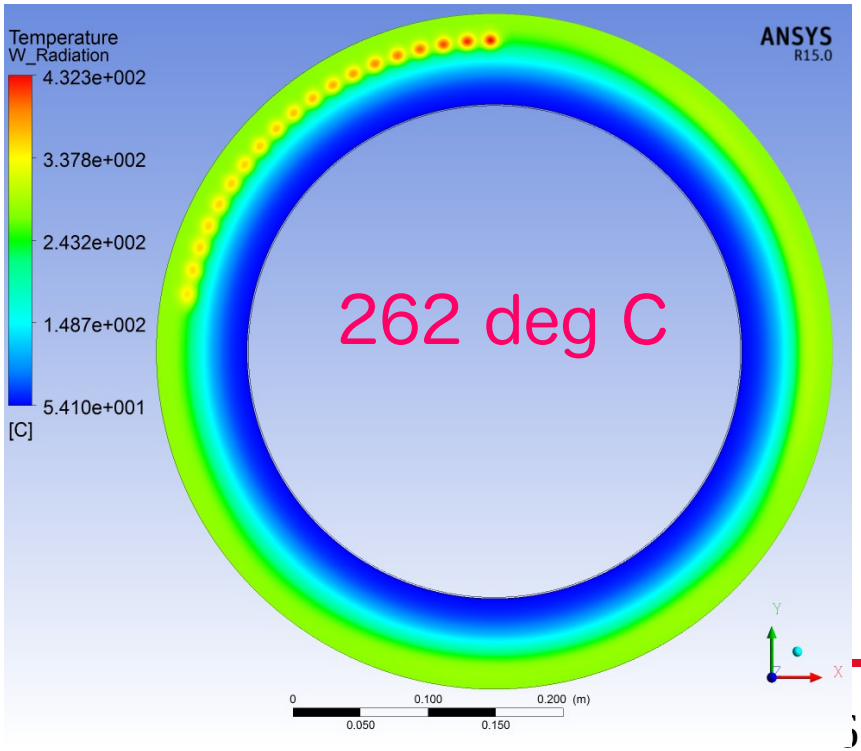

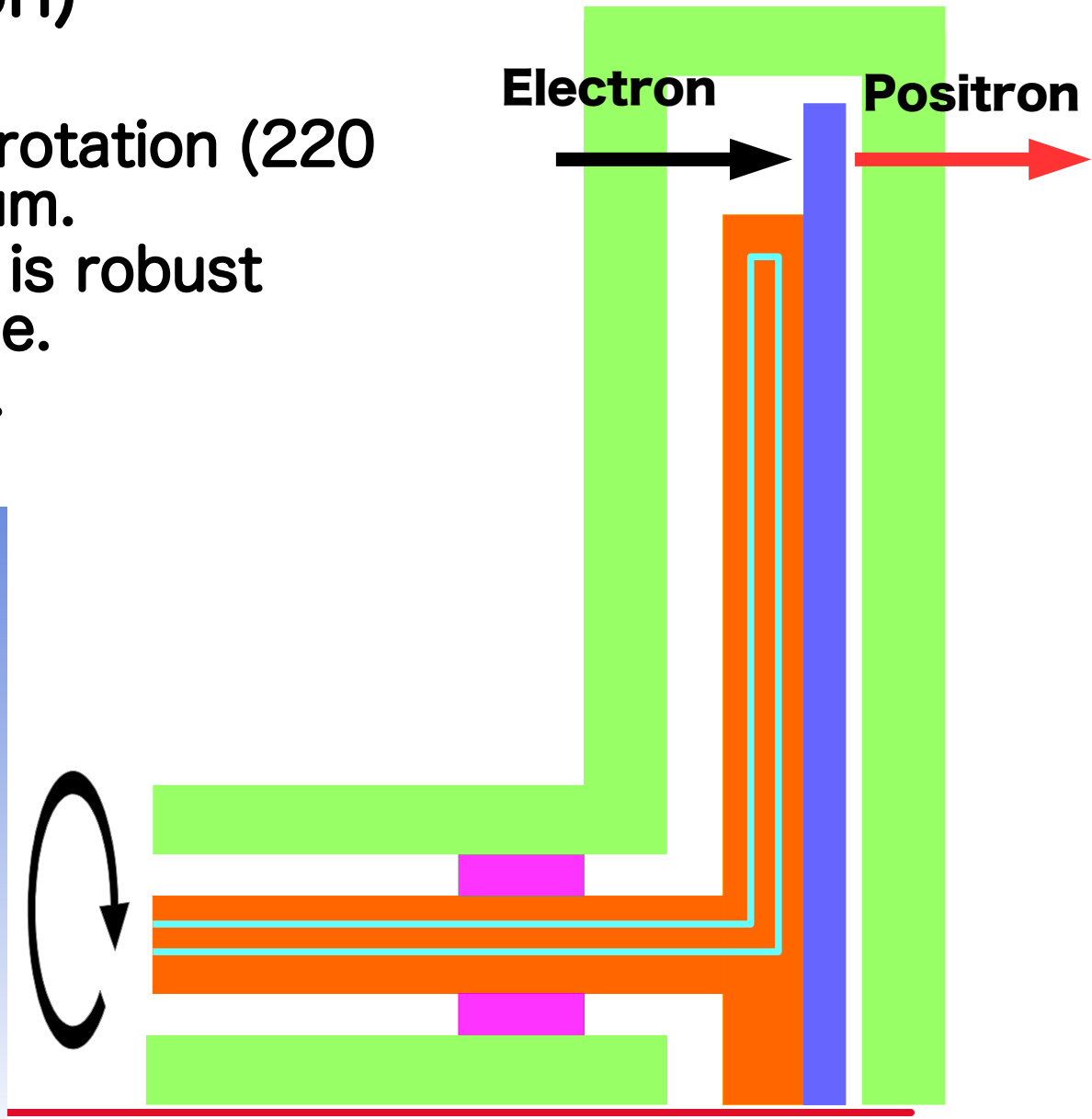

Energy Deposition near the target for E-driven source

(T. Takahashi)

- 4.8 GeV drive beam
- 16 mm W-Re target
- 3.5 mm RMS beam size

- Yield: 1.55e+/e-
- PEDD 30J/g
- 67kW in first 1.27 m

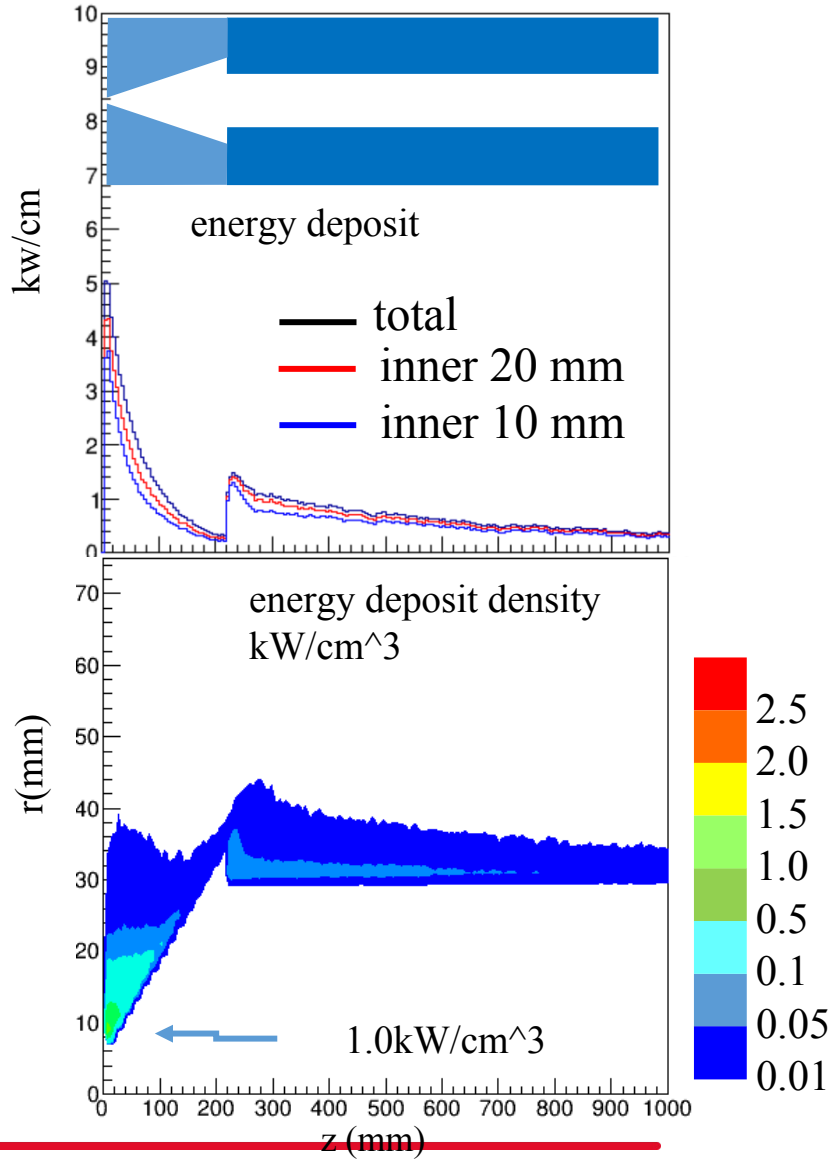

Issues on E-driven Source (T. Okugi)

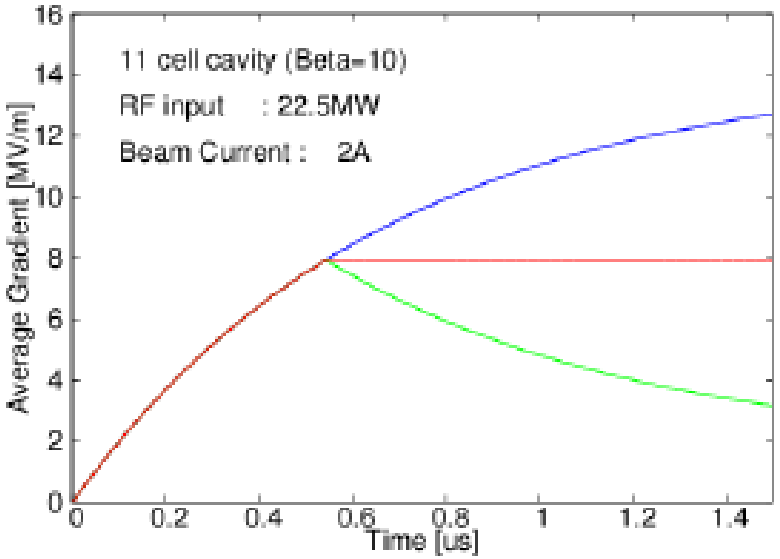

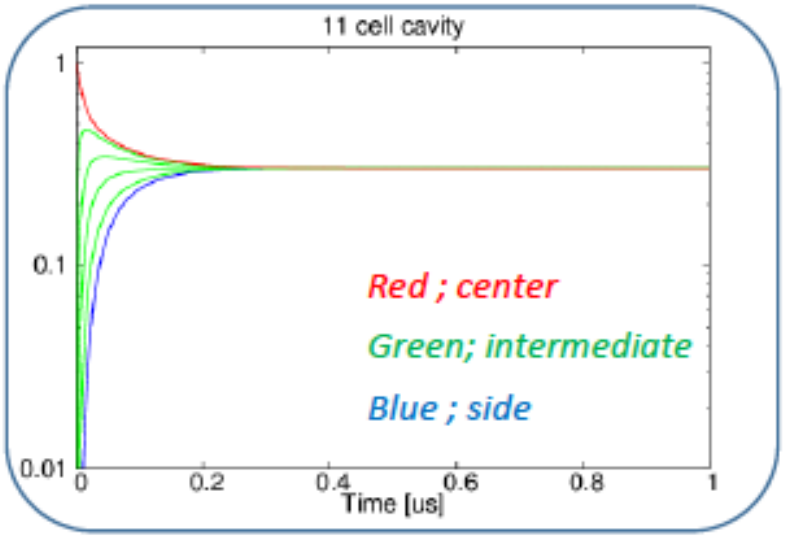

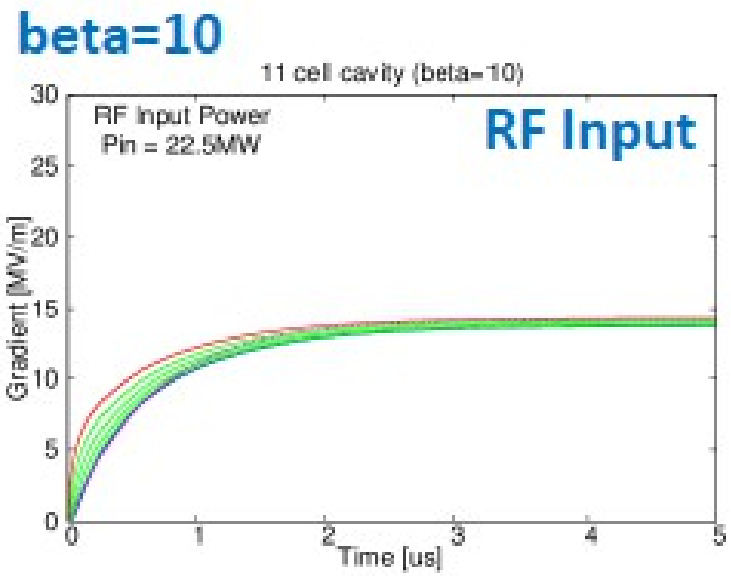

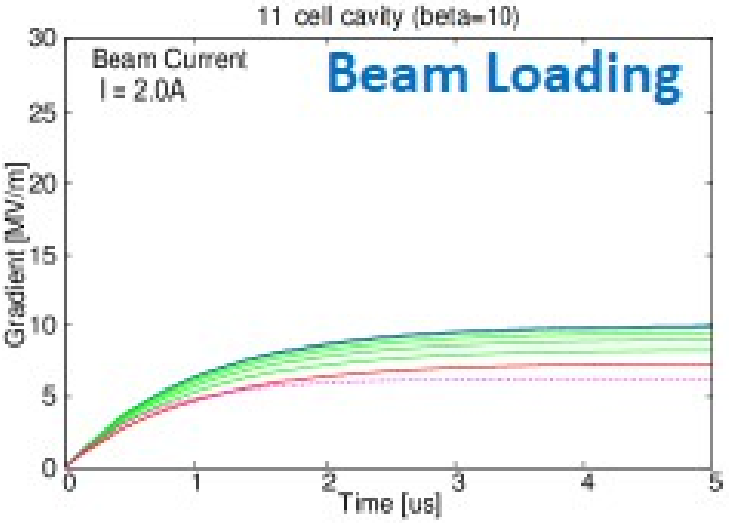

Hybrid E-driven Positron Source (H. Gler)

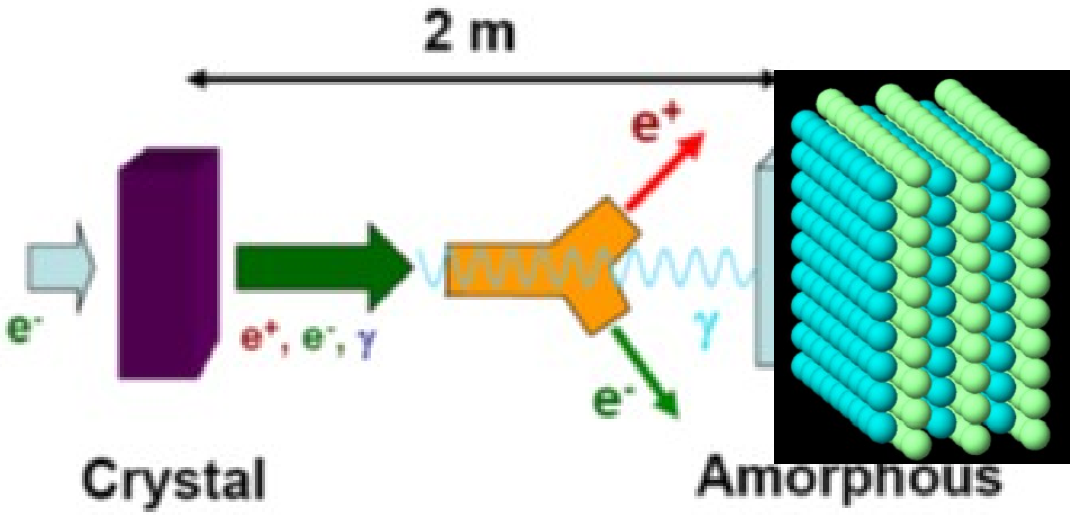

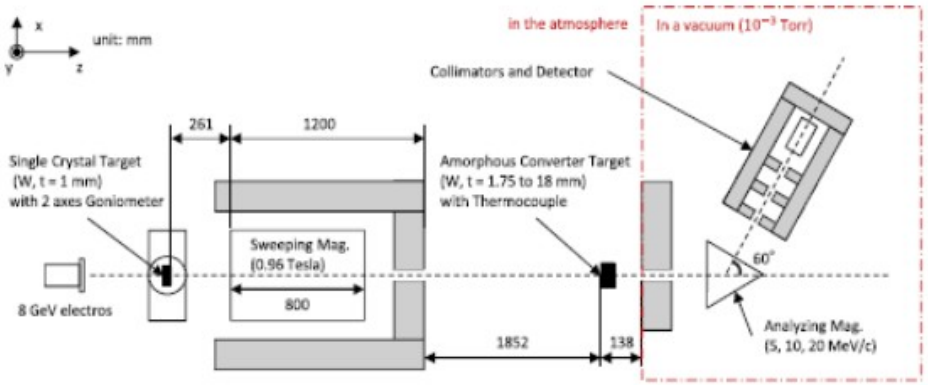

Fig. 4. Layout of the hybrid target and the positron detector system in the experiment in top view.

Beam Test at KEK Linac

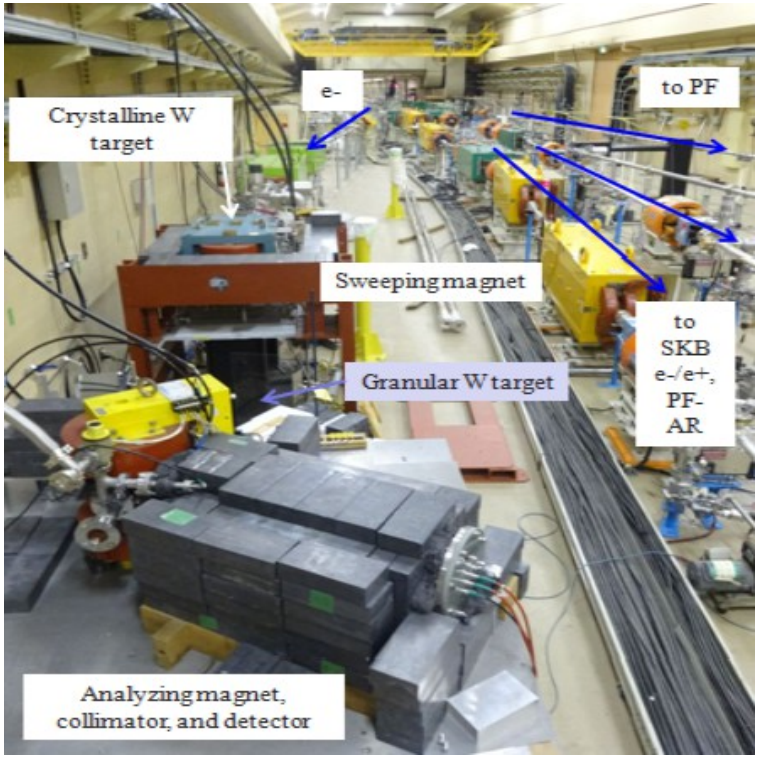

CR11: The CFS design compatible with both undulator source and e-driven source

- Move 5 GeV e+ booster for Undulator (approved)
- CFS is designed to be compatible with both Undulator and E-driven sources (carry over)
- A good starting point for the system integration.

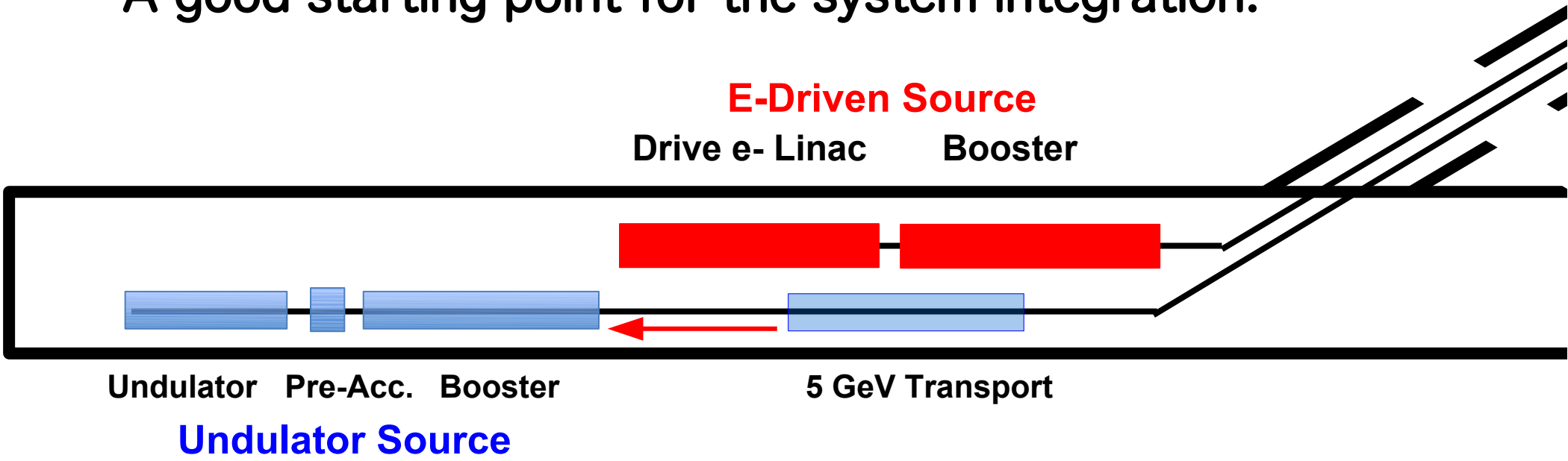

LINEAR COLLIDER COLLABORATION

Designing the world's next great particle accelerator

Source is the source of Physics