R&D on Very Forward Calorimeters for e^+e^- Colliders

Itamar Levy
Tel Aviv University

On behalf of the FCAL collaboration

ECFA - LC 2016, Santander
May 31, 2016

Forward region of LC detector.

The forward region of LC detector must give:

- Precision luminosity measurement
- Fast feedback and beam tuning
- Detector hermeticity

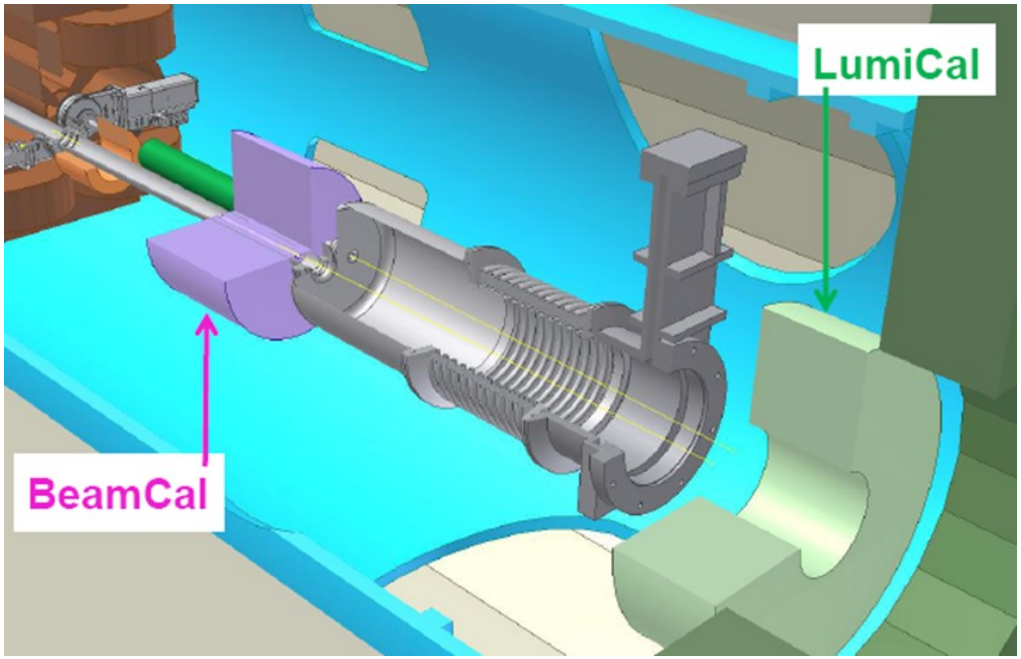

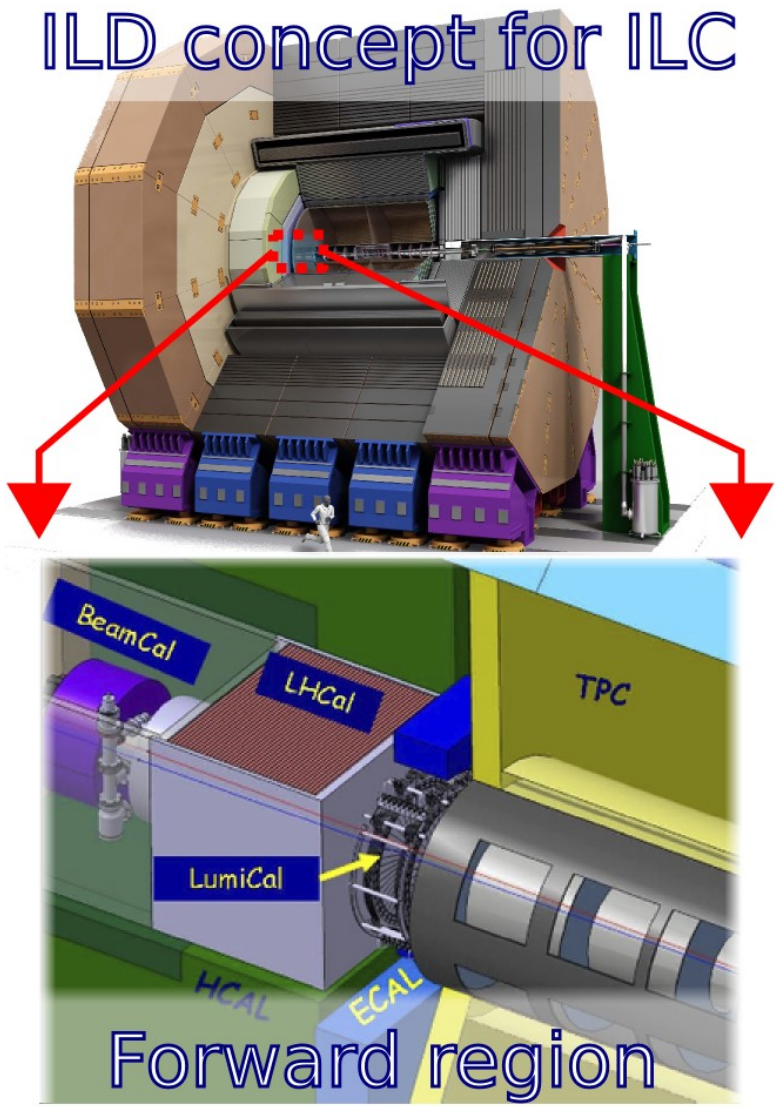

Mission of FCAL

Development of novel detector technologies for:

- Measurement of the luminosity in future e+e- linear collider
- Instrument the region near the beam-pipe for beam optimization and masking from background
- Development of algorithms to measure Bhabha scattering
  - Exploit the luminosity spectrum
- Estimate background processes
  - Exploit beamstrahlung depositions for beam-tuning
- General Design of the very forward region
- Contribute to the physics program

BeamCal

BeamCal is an electromagnetic sandwich calorimeter that uses Tungsten as absorber. It serves three major purposes:

- Improving the hermeticity of the detector to covering down to polar angles of a few mrad.
- Beam diagnostics.
- Reducing the backscattering from pairs into the inner ILC detector.

Due to the BeamCal location, the biggest challenge is the development of radiation-hard sensors, like :

- polycrystalline or single crystal CVD diamond (Chemical Vapor Deposition).
- GaAs.
- Sapphire.

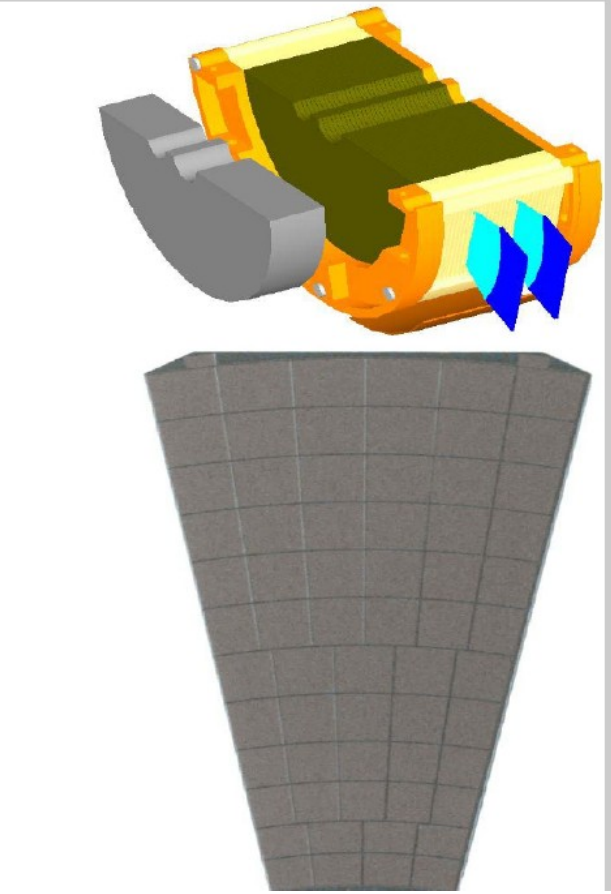

LumiCal

LumiCal is an Si-W electromagnetic sandwich calorimeter it serves three major purposes:

- Measuring the rate of Bhabha events at low angles.
- Reducing background by acting as a mask.
- Improving the hermeticity of the ILC detector by providing electron and photon identification down to polar angles of a few mrad.

One of the challenges for LumiCal is the needed mechanical precision.

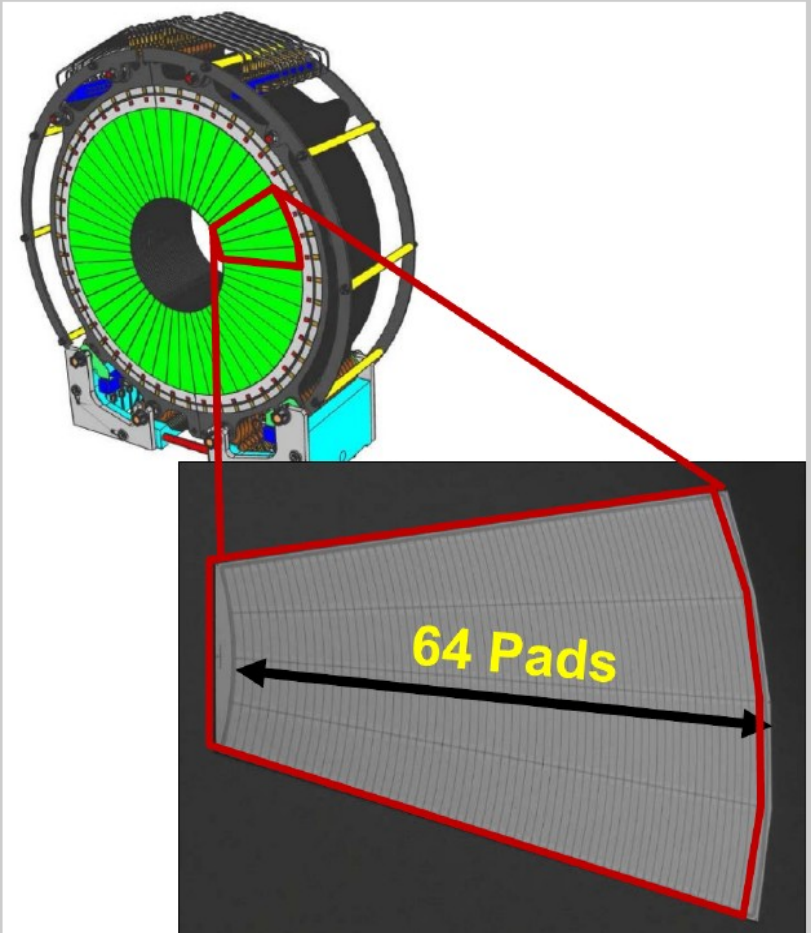

Luminosity measurement with LumiCal

The luminosity can be measured by counting number N_B of Bhabha events in a certain polar angle (θ) range of the scattered electron.

$$L = \frac{N_B}{\sigma_B}$$

σ_B – integral of the differential cross section over the same θ range.

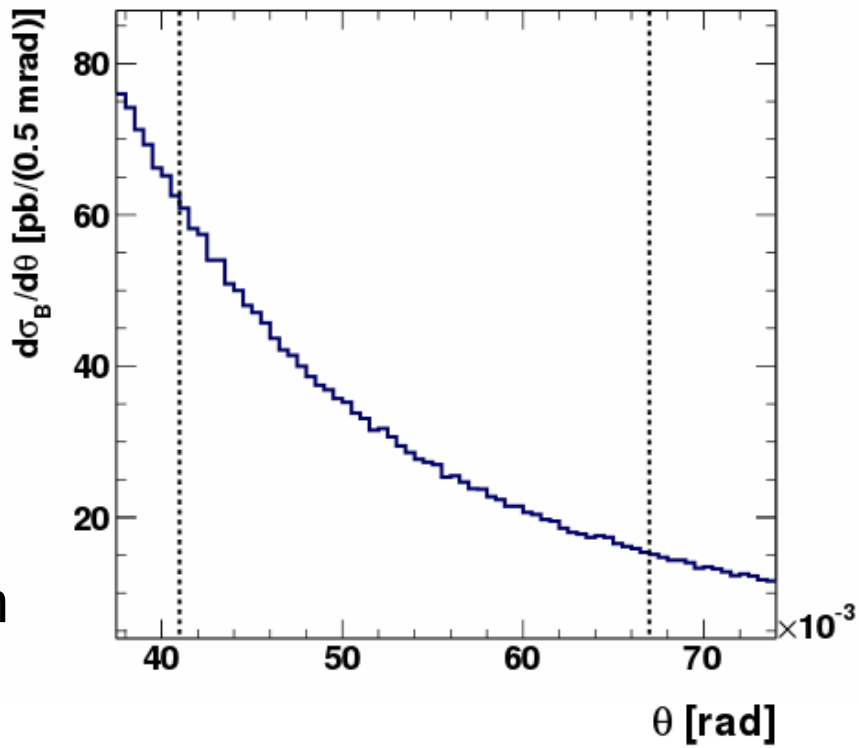

The cross section of the Bhabha process can be precisely calculated.

In leading order:

$$\frac{d\sigma_B}{d\theta} = \frac{2\pi\alpha_{em}^2}{s}\frac{\sin\theta}{\sin^4(\theta/2)} \approx \frac{32\pi\alpha_{em}^2}{s}\frac{1}{\theta^3},$$

the approximation holds at small θ.

α is the fine-structure constant,
s - center-of-mass energy squared.

FCAL activity overview

Thus goals and challenges sets the activity of FCAL R&D :

- ASIC's developments.
- Radiation hard sensors.
- Thin sensor modules assembly.
- Simulation studies.
- Position system.
- Test beam campaign.

New readout ASIC for LumiCal FLAME – FcaL Asic for Multiplane rEadout

- Present ASICs – old technology, high power, non-radhard, limited functionality
- FLAME: 16-channel ultra-low power readout ASIC in CMOS 130 nm, FE&ADC in ech channel, fast serialization and data transmission, all functionalities in single ASIC

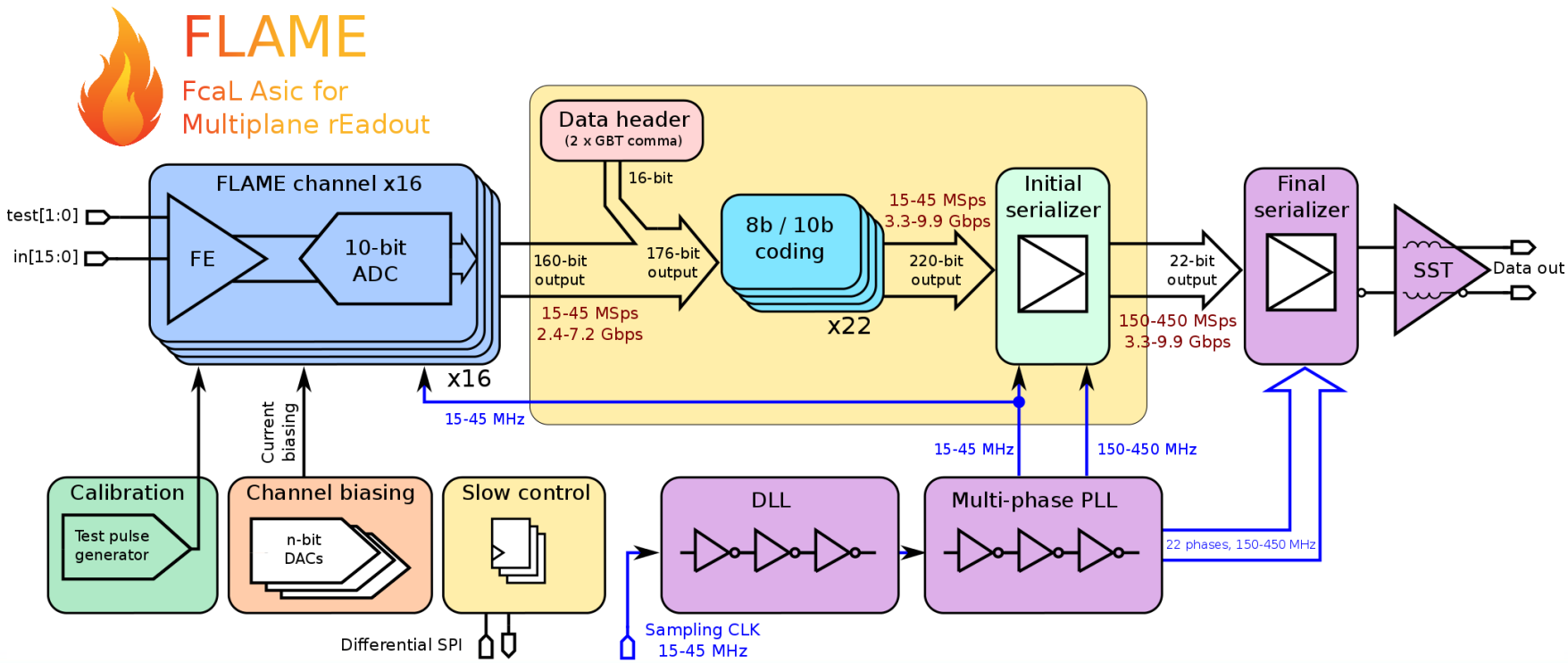

Specialized DAQ Module System

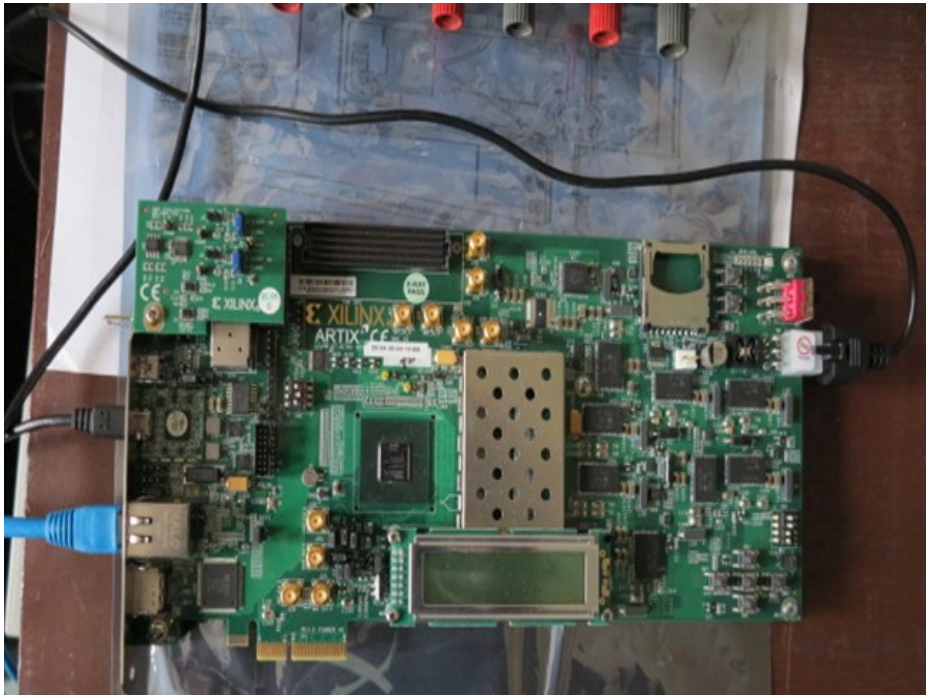

Prototype board: containing FPGA - Artix-7 XC7A200T (XILINX) and 8 GTP serial-type links allowing for data transfer with the speed up to 6.6 Gb/sec

IFJPAN – SPECIALIZED DAQ MODULE SYSTEM

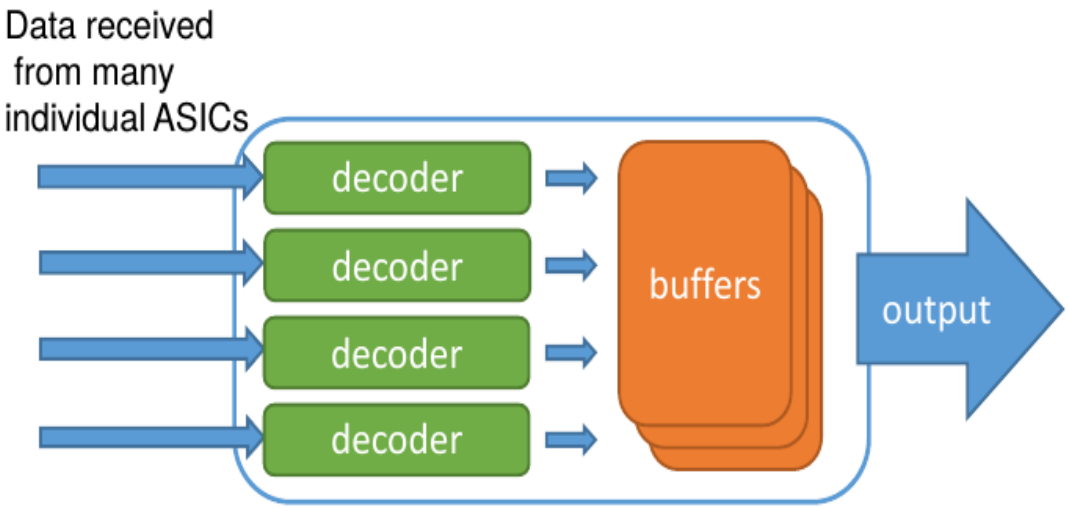

DAQ system is based on FPGA

Data received from FLAME ASICs readout system (AGH-UST) are decoded, added header information (board id, channel id, counter, etc), packed and sent (by Ethernet) to storage / common DAQ system

Work on a module of the DAQ system goes on using Xilinx software Vivado and is concentrated on the basic steps:

- Test data processing with the structure input data close to ASIC output
- Attempt to use the real data after connection to AGH-UST ASIC board

Irradiation study test in SLAC.

Irradiation studies are done in a mixed radiation field as we expect it in BeamCal.

2 X_0 pre-radiator; introduces a little divergence in shower

Sensor sample

Not shown: 4 X_0 "post radiator" and 8 X_0 "backstop"

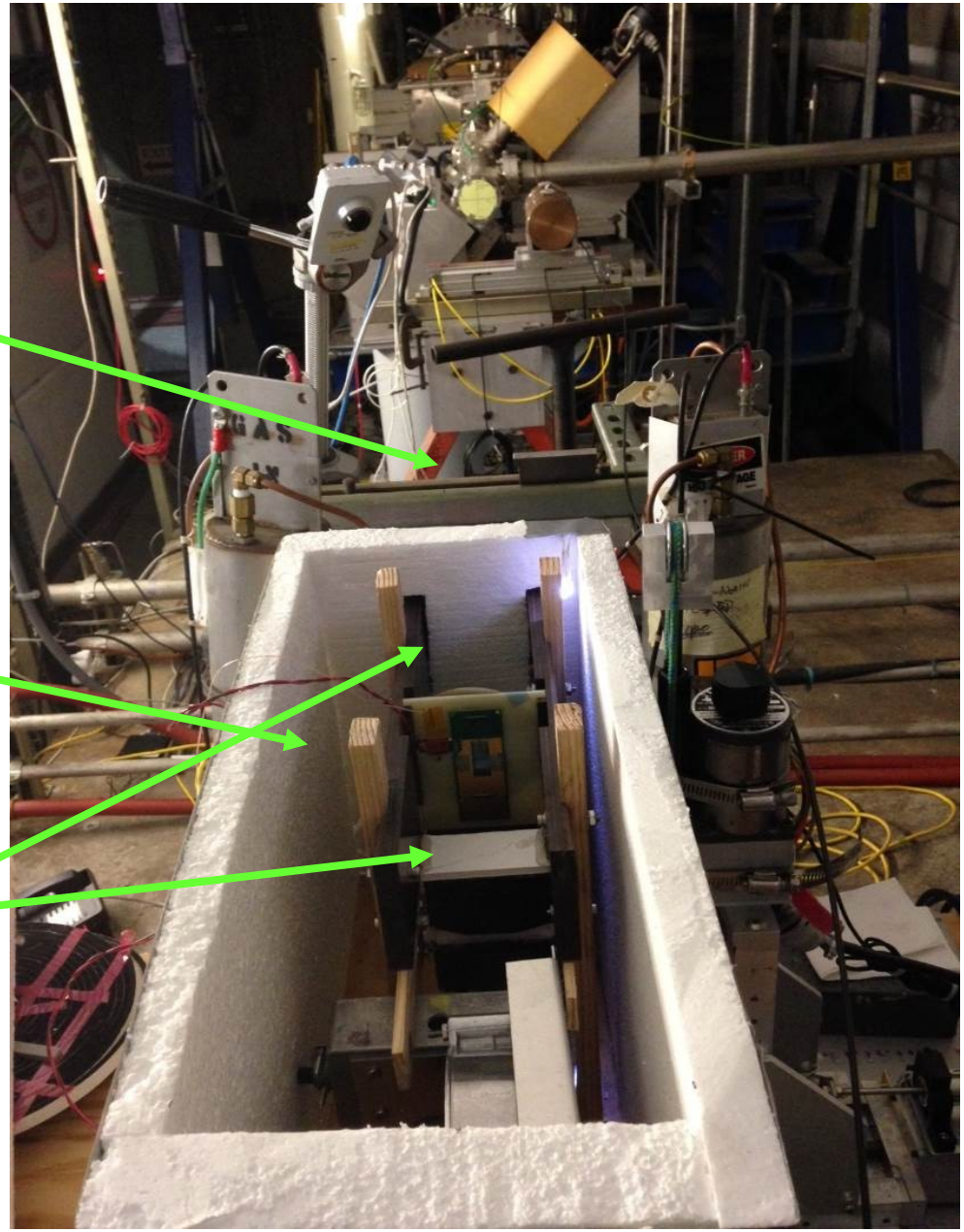

Irradiation studies are done for several different sensor types and materials.

New thin sensor module

Loop height is well below 100 µm

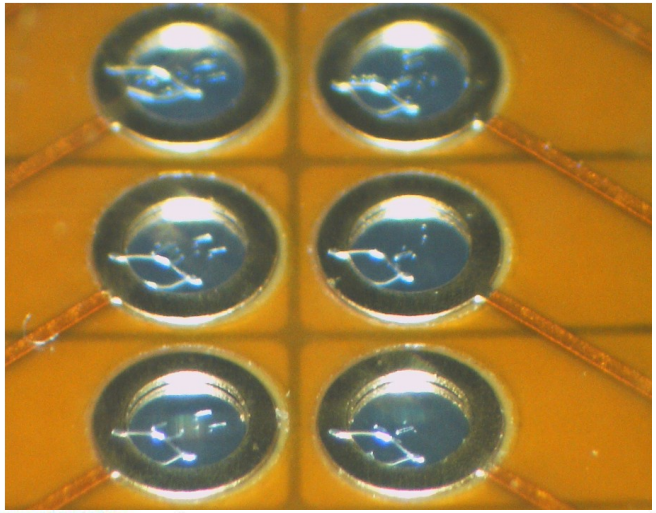

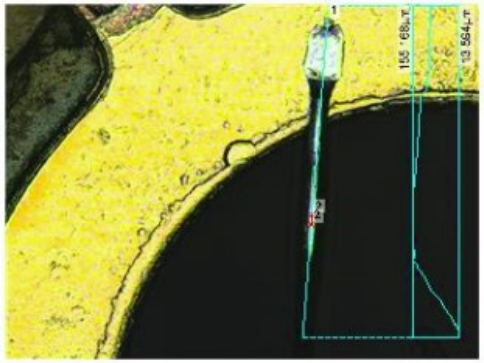

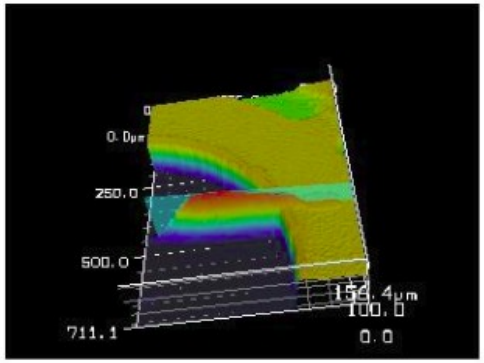

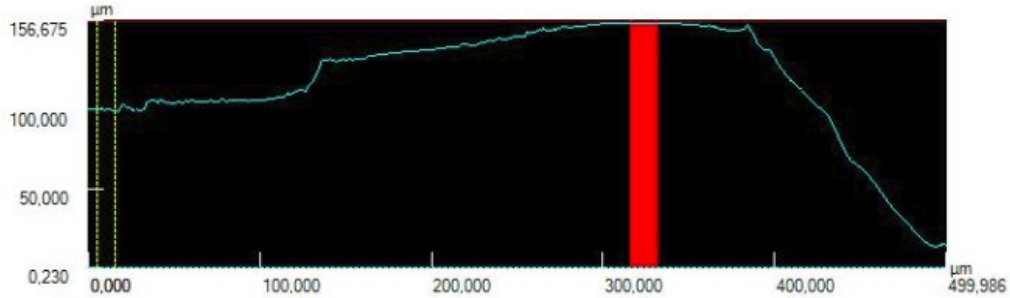

Profil1	Horiz.Abst.	H-Unters.	Durchs.-H	Winkel	Quers.Lä.	Quers.Fl.	R	Anmerk.
Alle	499,986µm	86,255µm	118,866µm	9,788°	633,548µm	59398,910µ...		
Seg.1	10,149µm	1,145µm	100,246µm	6,436°	11,458µm	1111,257µ...		
Seg.2	14,208µm	0,202µm	155,037µm	0,814°	14,259µm	2365,037µ...		

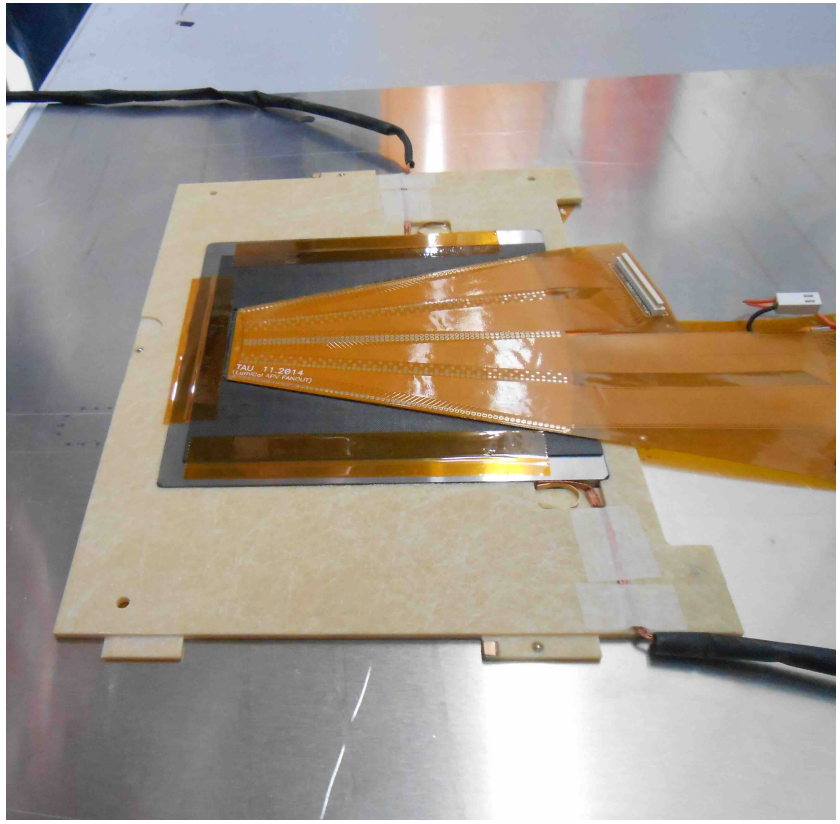

Frontend Contact Technologies

Search for long-term stable contact between sensor and readout electronics which meets LumiCal and BeamCal geometrical (compactness) requirement

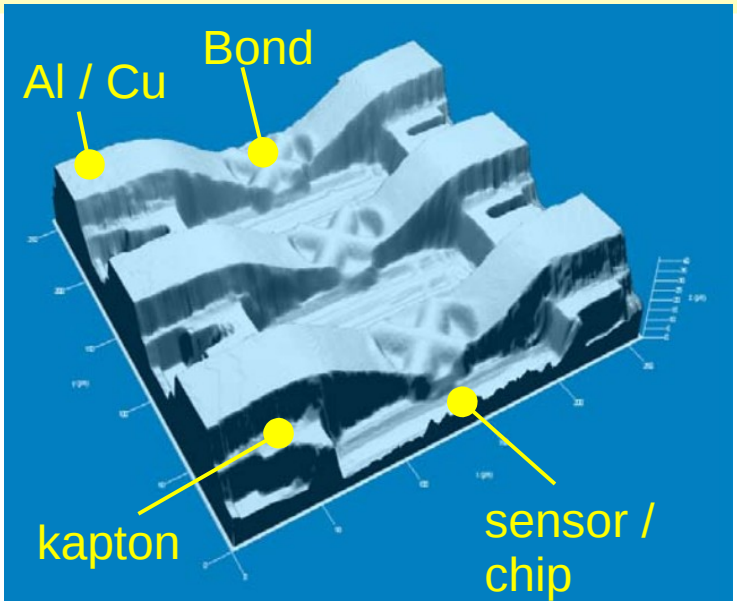

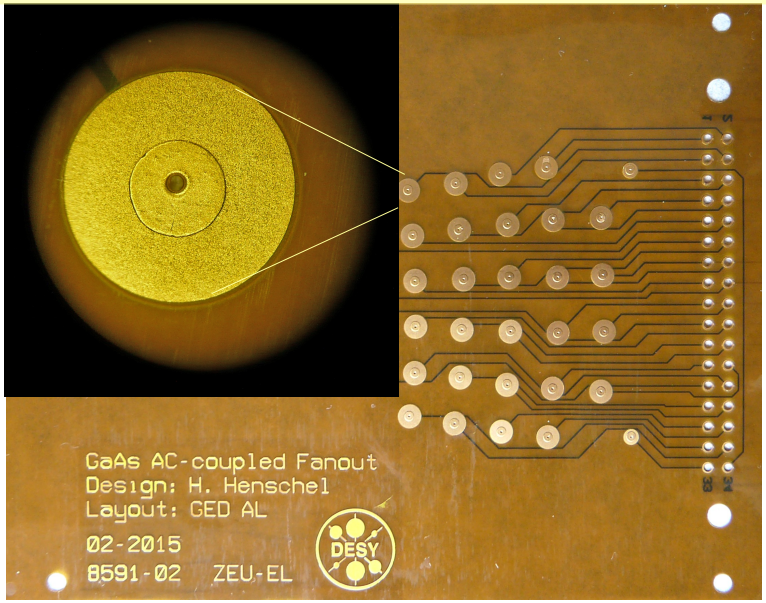

Single point Tape Automated Bonding (TAB):

- No wire loop;
- The bond can be covered by the glue for better protection;
- It is difficult to repair bonding defects;
- Work in progress in TAU.

Spring Loaded Contact investigate in DESY Zeuthen:

- Can be easily disassembled and reassembled again;
- The difficulty is to preform uniform pressure over the whole sensor area;
- On going test with 4 channels of GaAs sensor.

Tracking Detector in Front of LumiCal

- Improve polar and azimuthal angle measurement accuracy;
- LumiCal alignment;
- Provide more information to enable e/γ identification, important for various physics studies, for example photon structure function.

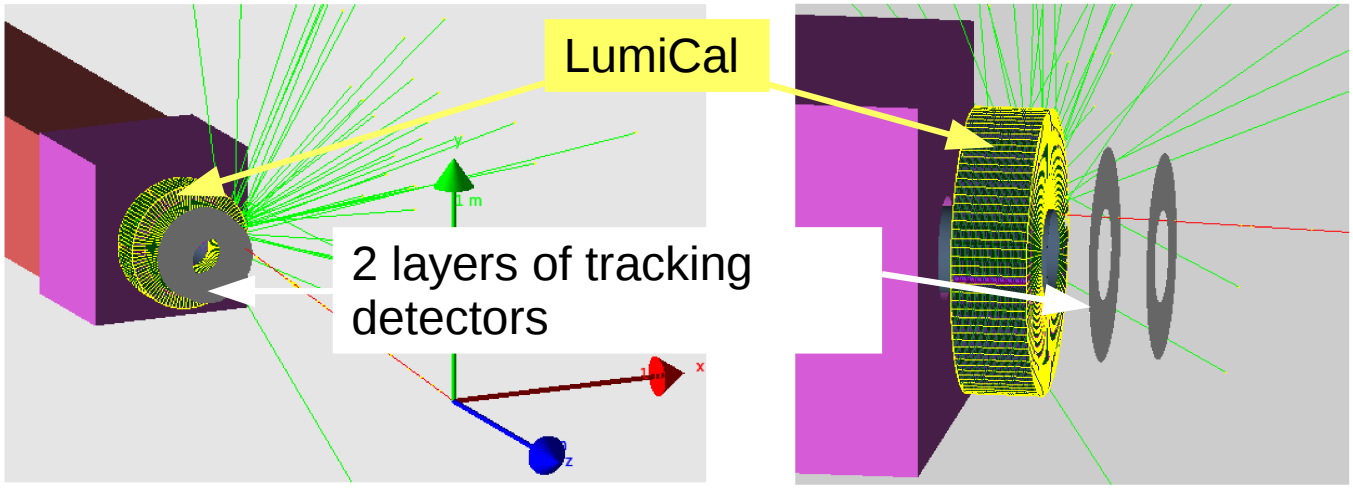

- Electron and photon identification efficiency with two 100 μm silicon sensitive planes in front of LumiCal estimated to be 99.8% and ~99% (99.3% combined) in simplified approach for track reconstruction;
- Consider in future the simulation with full detector geometry, realistic background and track reconstruction;
- Mechanical design.

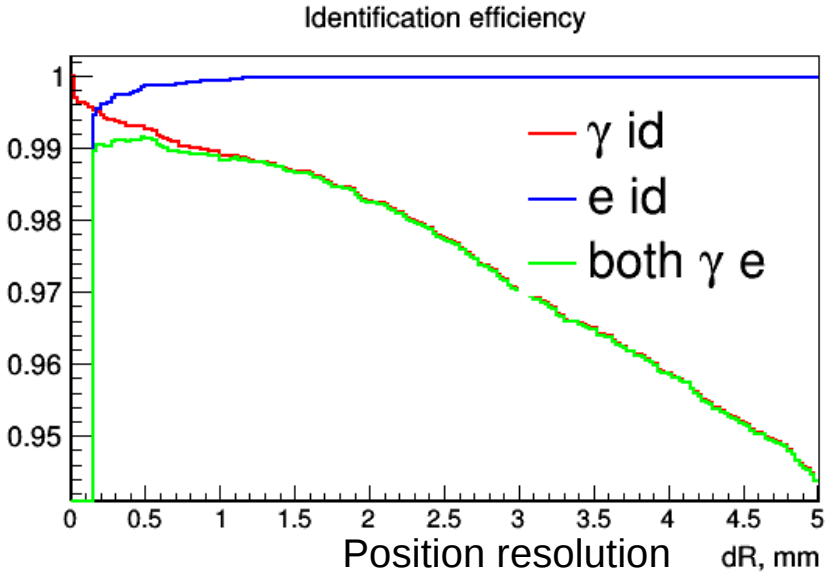

Impact of different L*

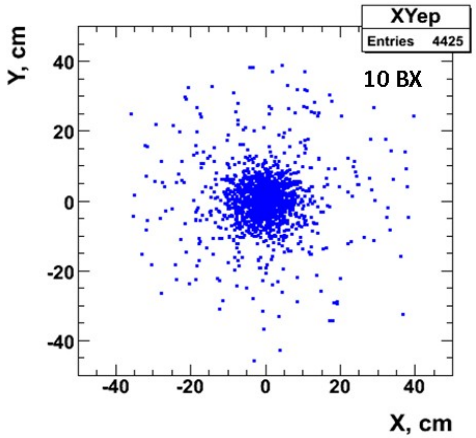

All particles

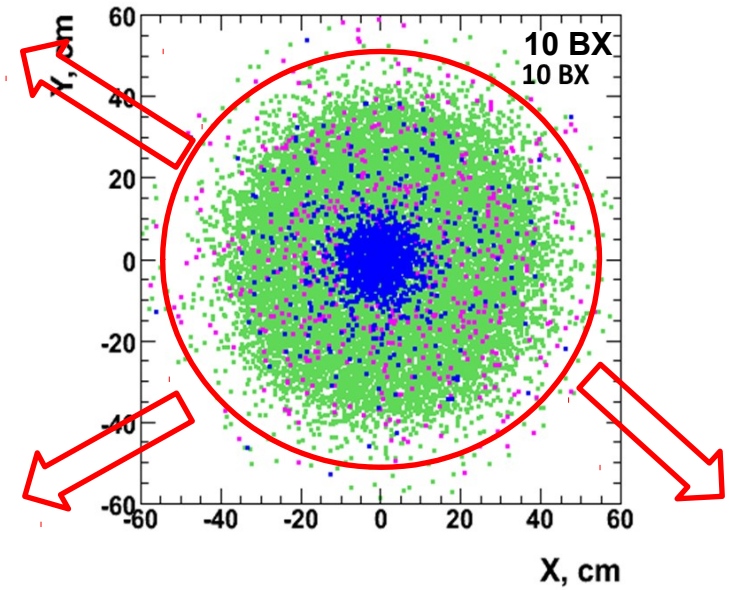

- For R > 50 cm the amount of particles drops almost to zero, due to absorption in the LumiCal

  => region with R < 50 cm will be further considered

- e-e+ mostly concentrated at the center within this area

- photons & neutrons distrubuted uniformly

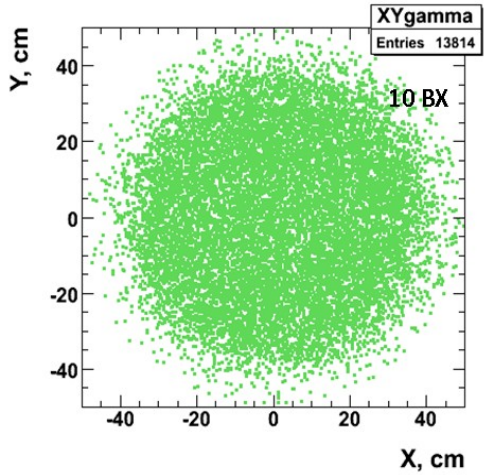

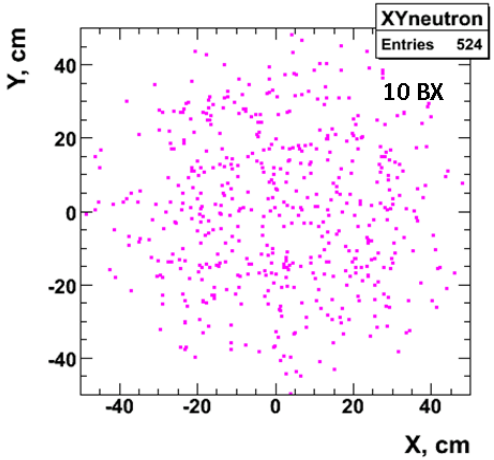

First LHCal studies

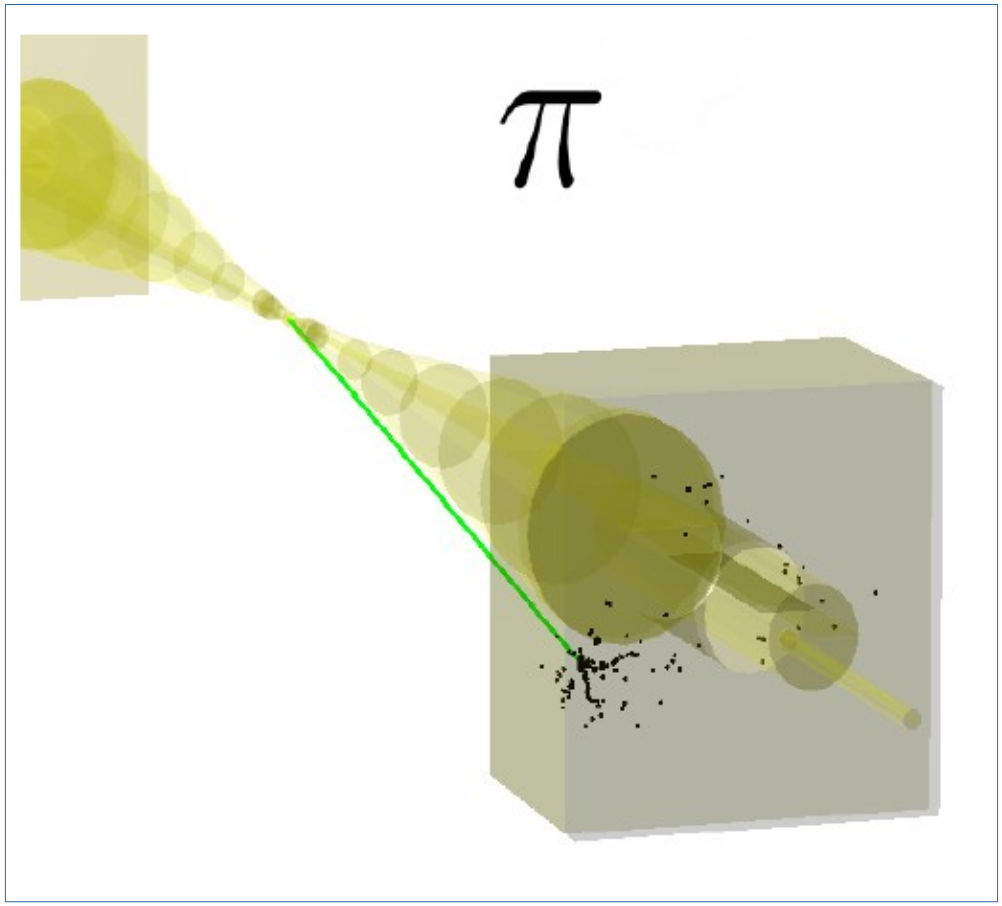

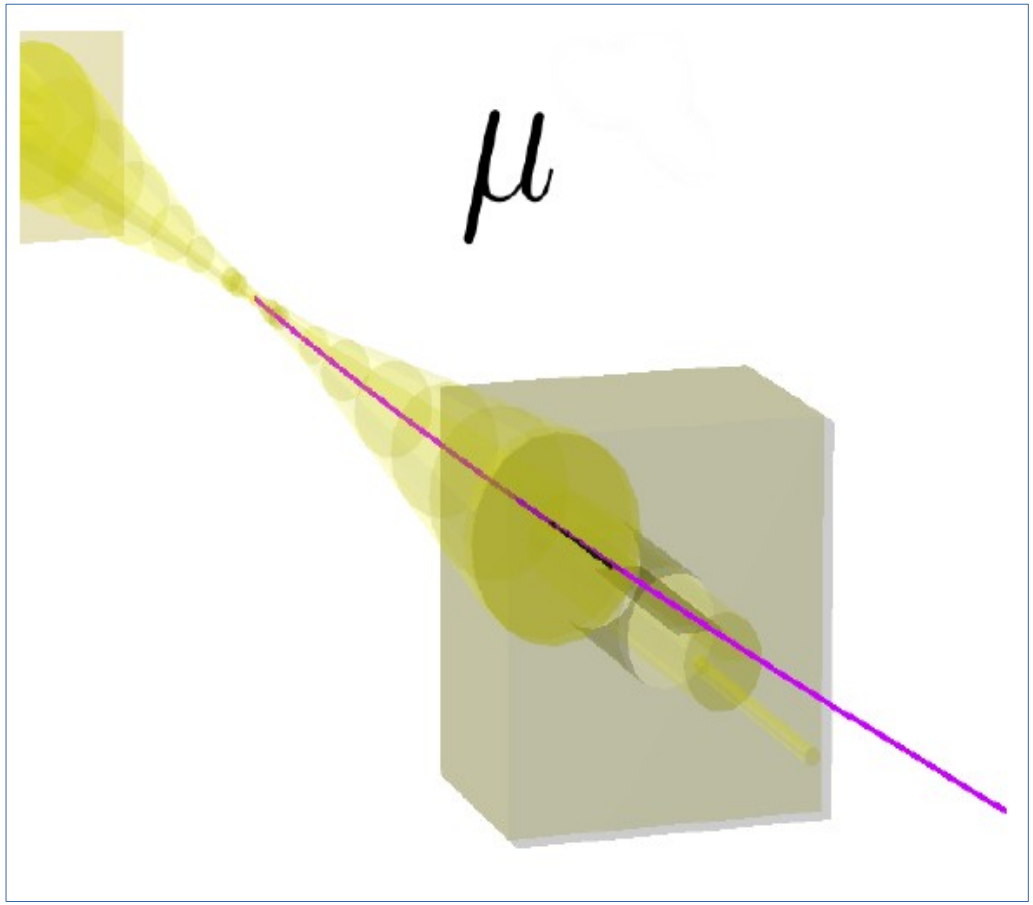

Tests Beam

- The performance of fully instrumented LumiCal and BeamCal detector planes was studied in previous beam test campaigns.
- A full detector prototype is needed by the end of the AIDA-2020 project.
- Two beam tests ware done up to now, at October 2014 and in 2015.
- The third is planned to this summer.
- To allow the multiple-plane operation, a sophisticated mechanical structure was
  developed at CERN to meet the demanding geometrical requirements.

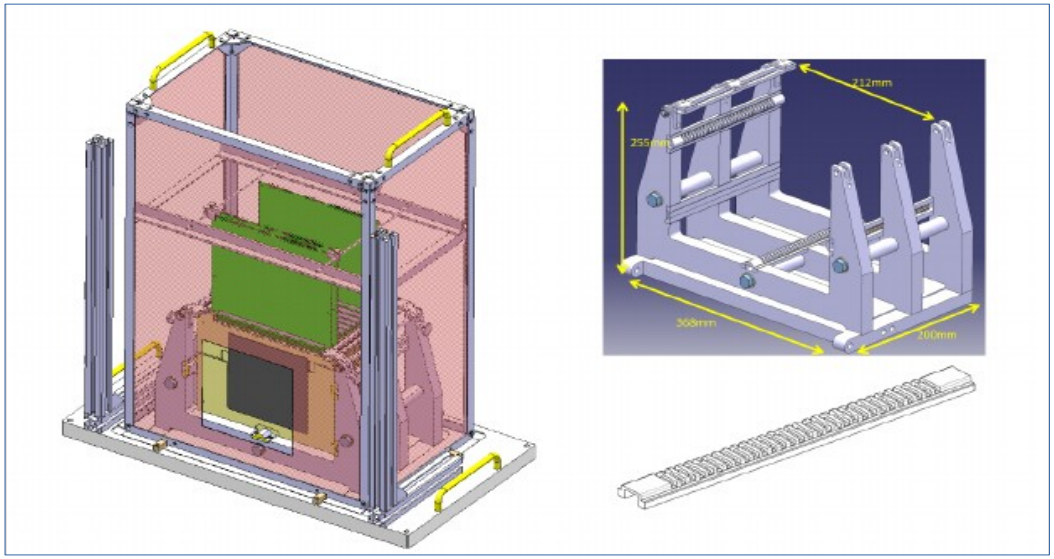

LumiCal 2014 Beam Test Configurations

Three different configurations for the LumiCal were used.

CERN PS beam at T9

5 GeV beam;

Trigger on:

- Electrons and muons;
- Hadrons.

For different configurations 55k-75k e^- events were collected.

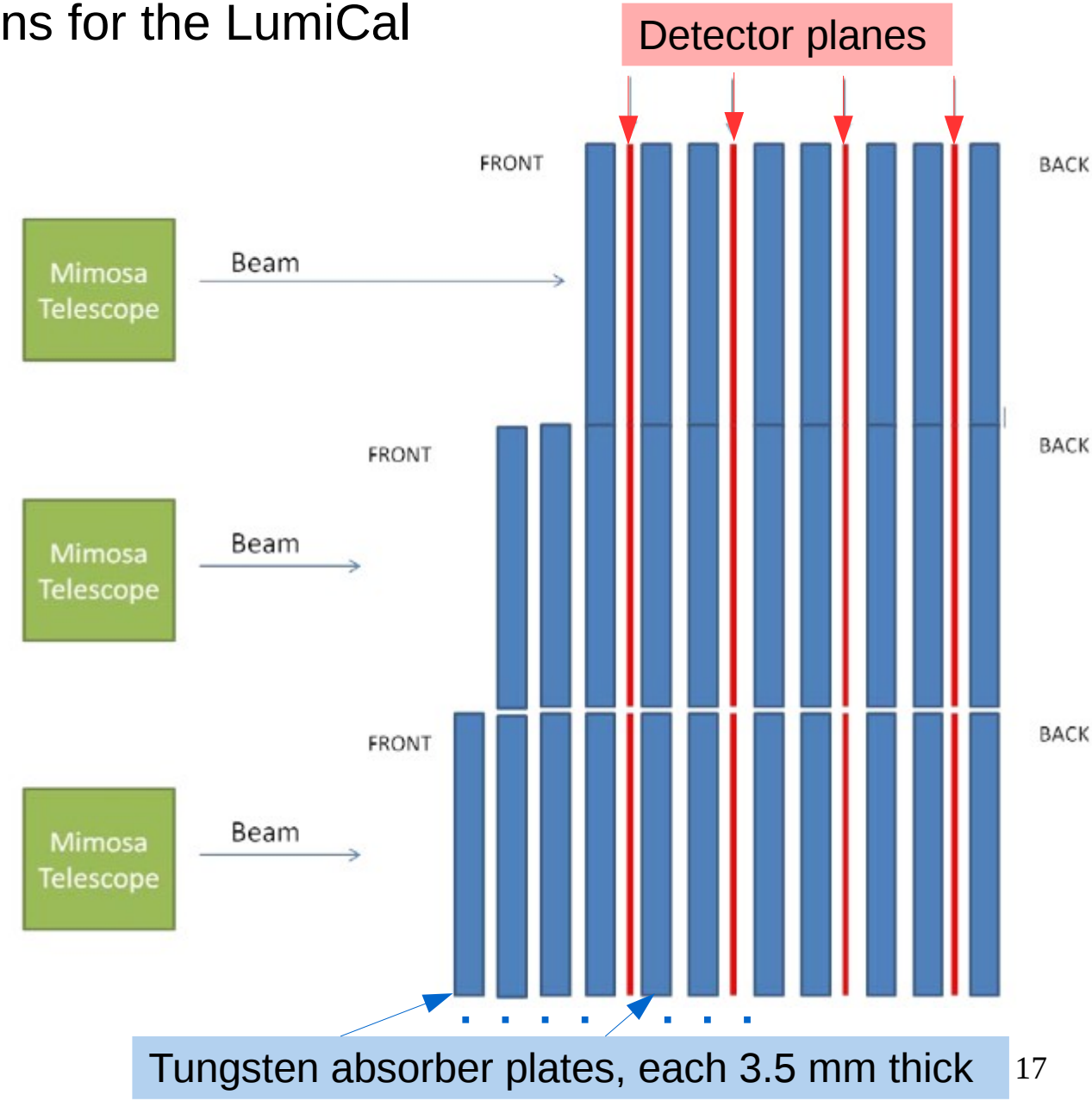

2014 TB - shower development

As can be seen, good agreement was found between data and MC.
The shower maximum is observed after 6 radiation lengths.

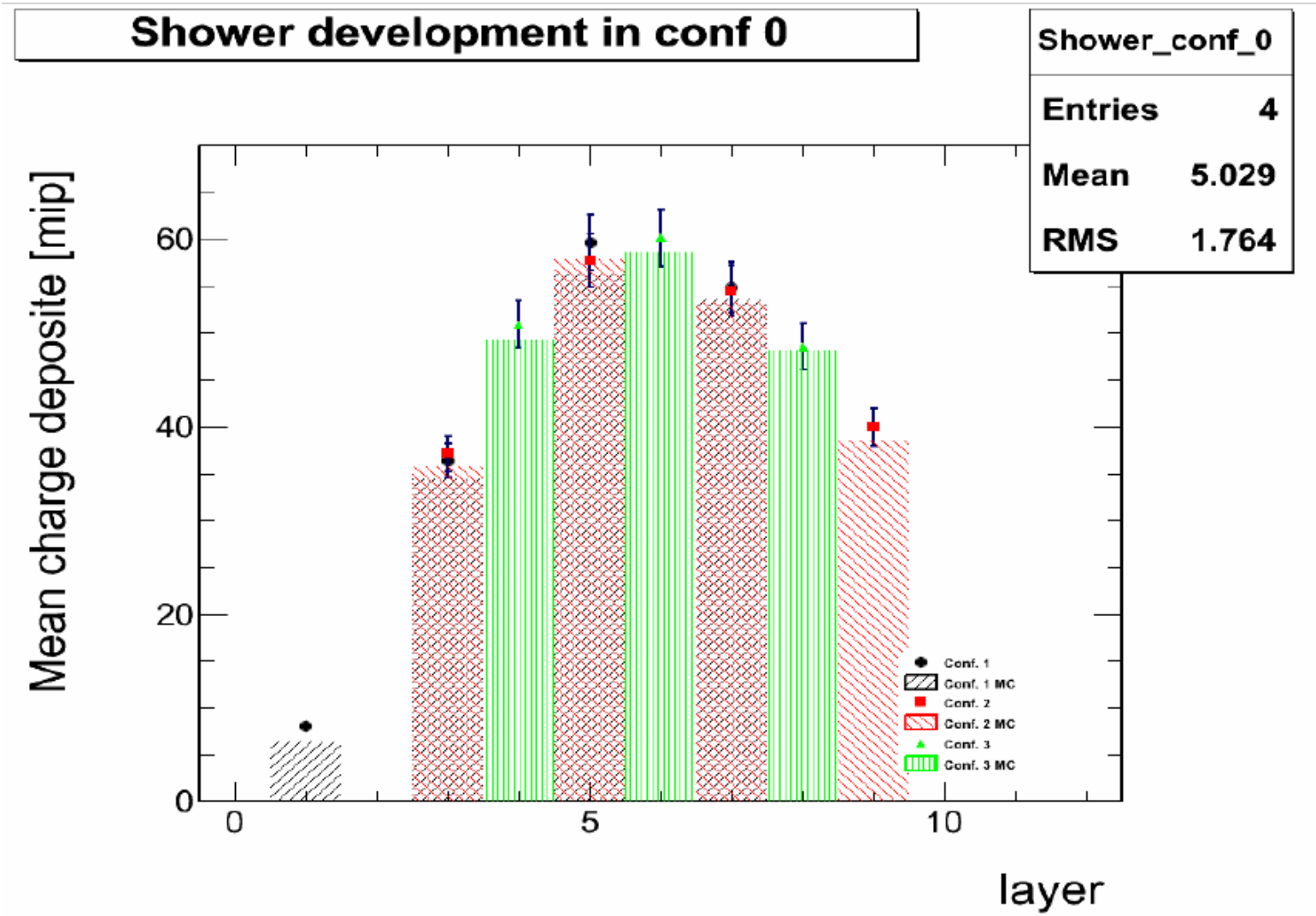

2015 TB Modification Goals

- Primary aim is to build LumiCal prototype for beam tests and demonstrate the principle of compact electromagnetic calorimeter;
- Make the geometry of the detector module closer to the designed for LumiCal at LC experiments;
- Reduce module thickness below 1 mm, to fit space between absorber plates;
- Provide mechanical rigidity for the module to simplify its handling during the assembly of calorimeter prototype;
- Try to read-out all pads of the LumiCal sensor

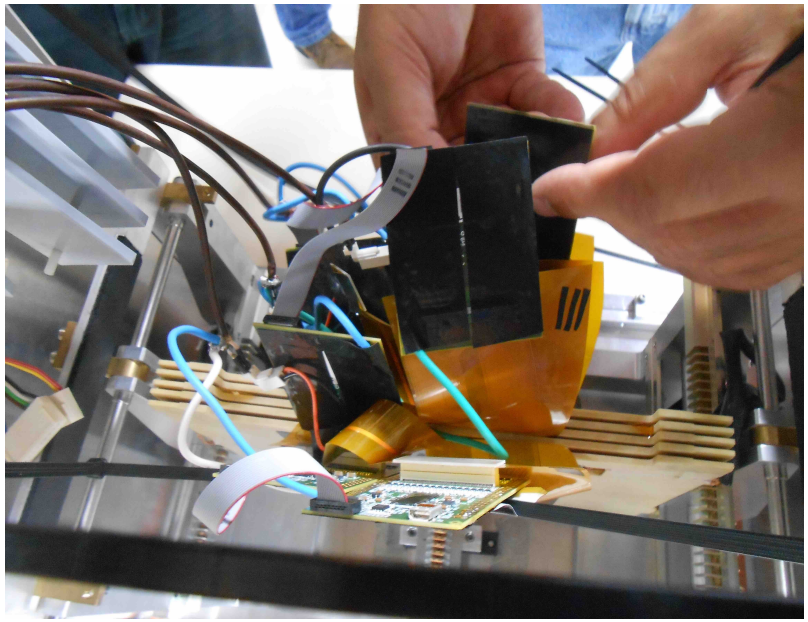

Moliere radius for 3.5 mm tungsten plates stack as a function of the air gap between plates

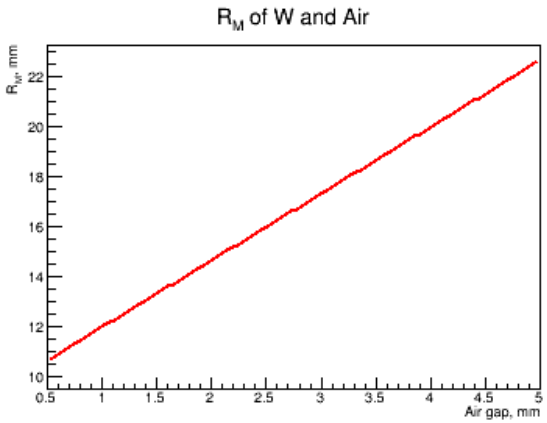

LumiCal Readout with APV-25 and SRS

- Common chip link interface allowing to choose a readout chip
- Scalability from a small to a large system based on a common readout backend
- Integration of commercial standards for a minimum of custom hardware
- Default availability of a robust and well supported data acquisition package
- Possibility for different readout architectures and trigger schemes
- Open platform invites users for development of SRS hardware and firmware

- Supports the system construction up to 10M channels;
- Available at CERN stock;
- DATE DAQ and ROOT for analysis;

- For module study and beam tests 2015 we used mmDAQ (DAQ system developed for Micromegas ATLAS detector);

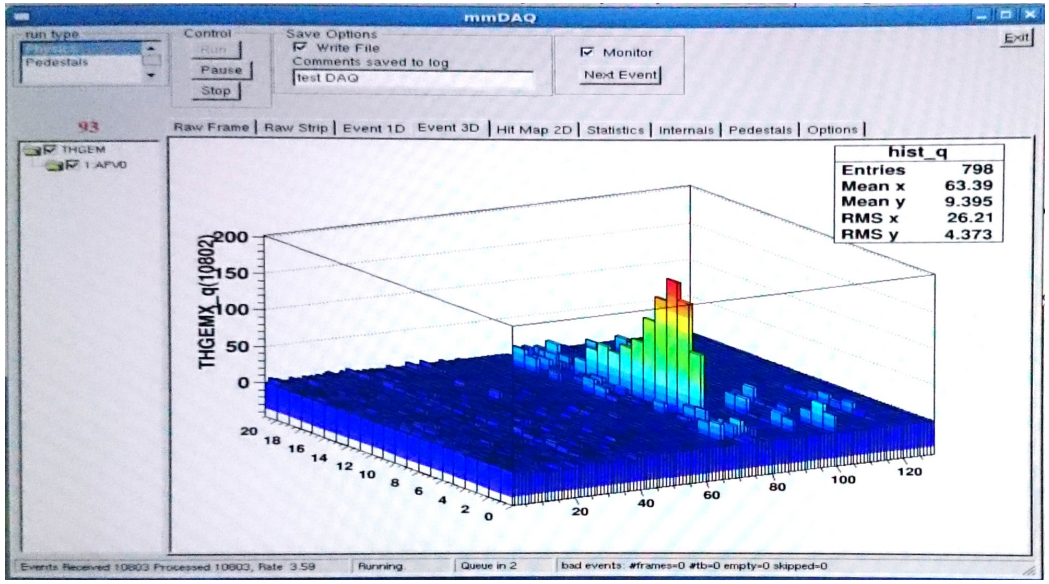

2016 TB - Electron and Photon Beam Position

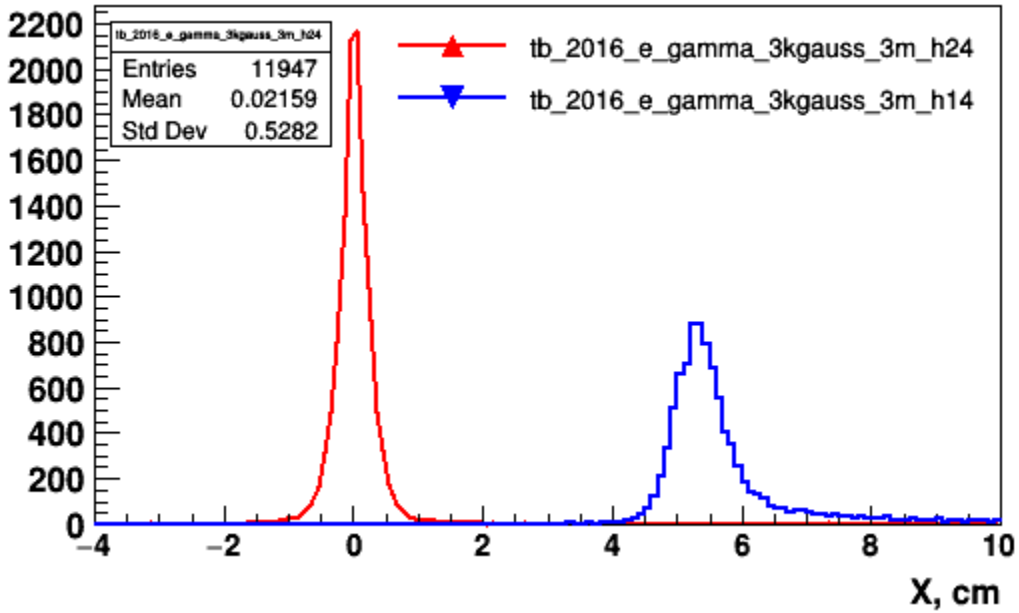

B = 1.5 kGauss

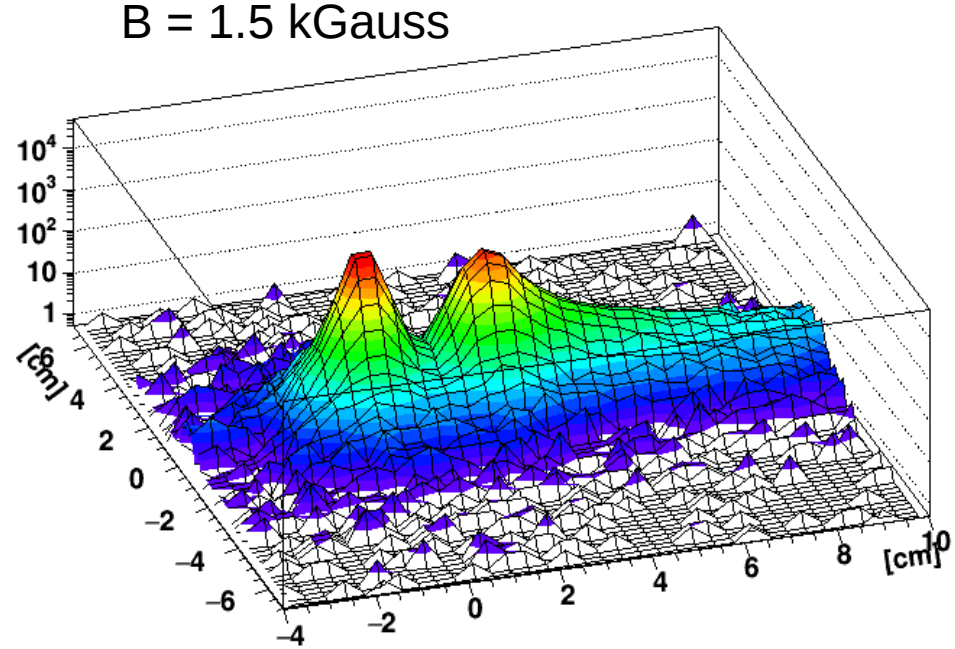

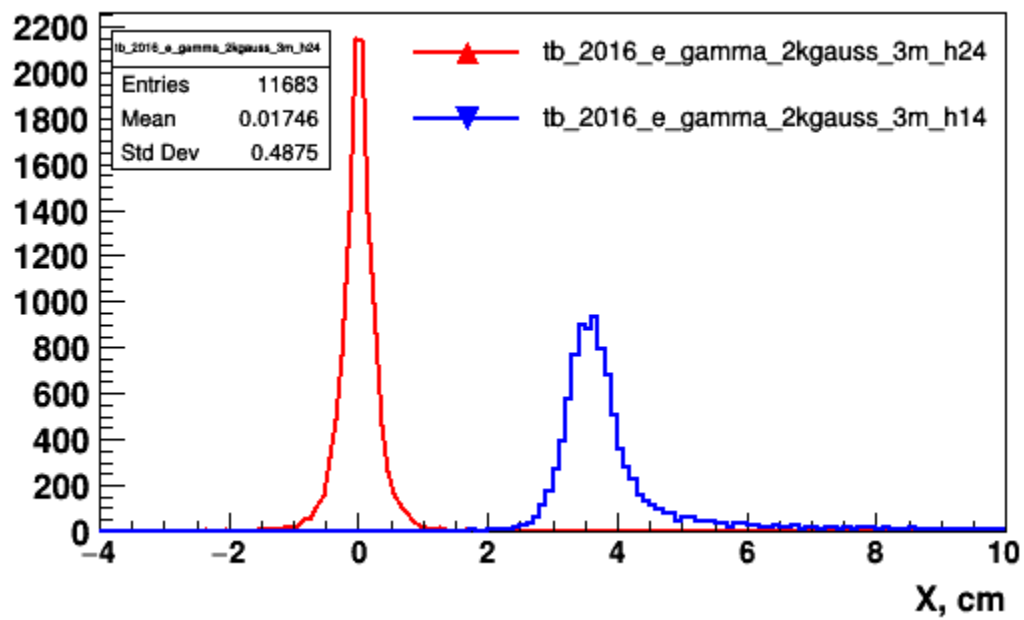

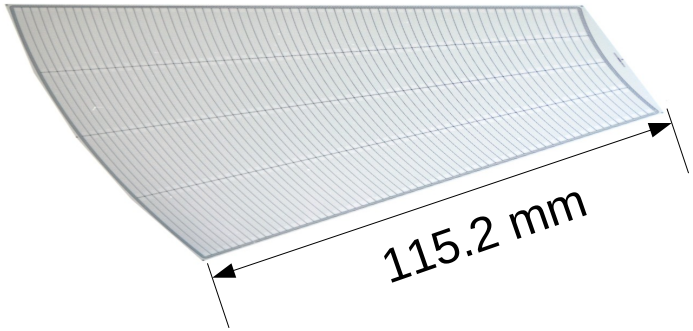

- $e^-\gamma$ angle ~ 4/400 = 10 mrad;
- For both beams to be in telescope it must be within 6 mrad.
- Need to play with distance and **B**.

Summary

The goals and challenges FCAL faces, bring a wide range of topics of R&D : ASIC's developments, Radiation hard sensors, Thin sensor modules assembly, Simulation studies, Position system and Test beam campaign.

FCAL R&D efforts aims for a prototype calorimeter to test the design and verify the performance in the MC simulations.

We will get a short taste today from the variety of work done in the FCAL collaboration.

Thank you for attention!