Measurement of the *Moli'ere radius* from the 2014 TB data

Itamar Levy

Tel-Aviv University,
On behalf of the FCAL collaboration

FCAL Workshop Tel-Aviv, 18 September 2016

FCAL

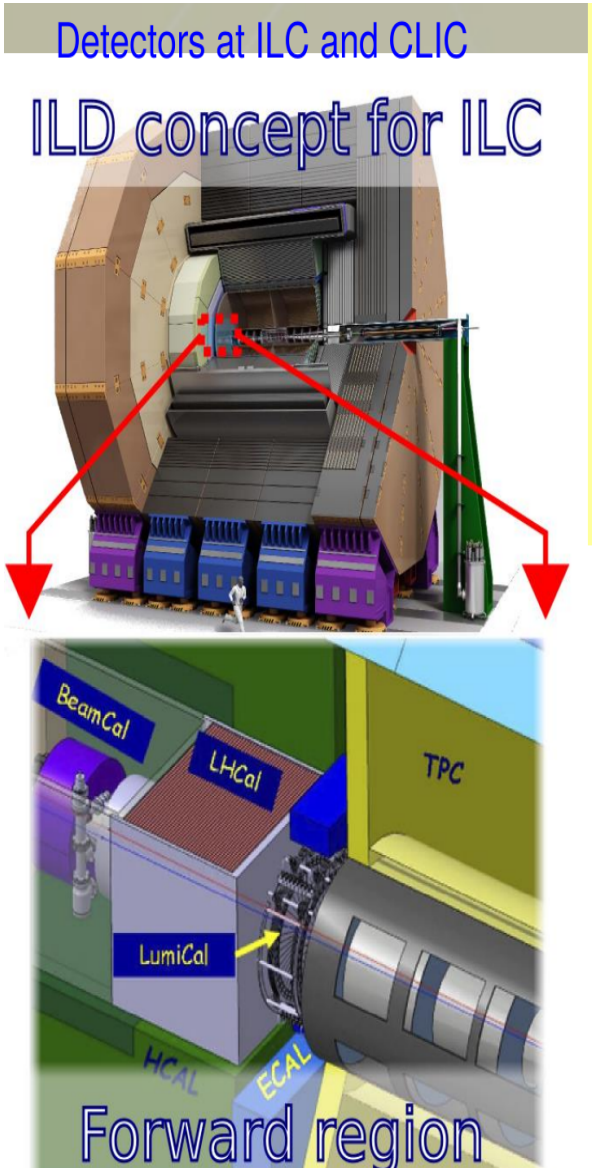

Optimisation of the design of the very forward region of LC detector

- Precision luminosity measurement
- Fast luminosity measurement and beam tuning
- Detector hermeticity

Challenge: Fast readout, radiation hard sensors

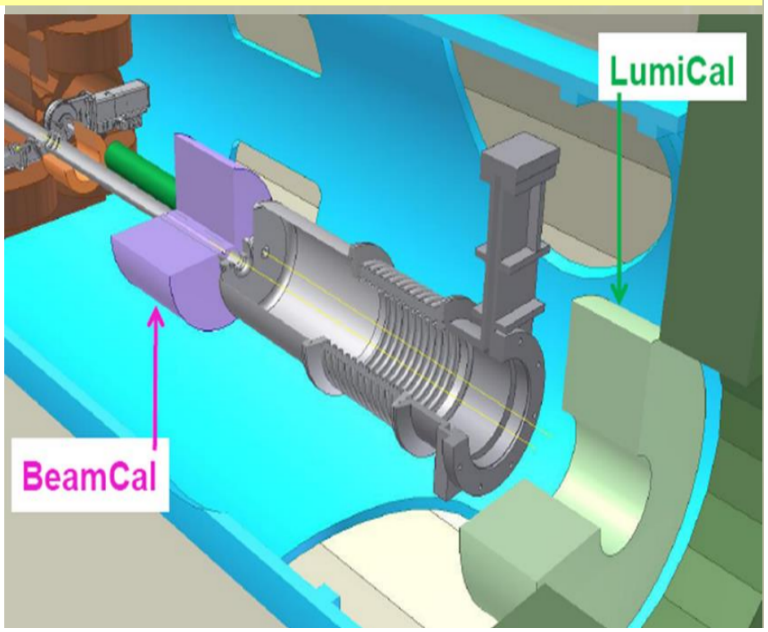

LumiCal

LumiCal is an Si-W electromagnetic sandwich calorimeter it serves three major purposes:

- Measuring the rate of Bhabha events at low angles.
- Reducing background by acting as a mask.
- Improving the hermeticity of the ILC detector by providing electron and photon identification down to polar angles of a few mrad.

One of the challenges for LumiCal is the needed mechanical precision.

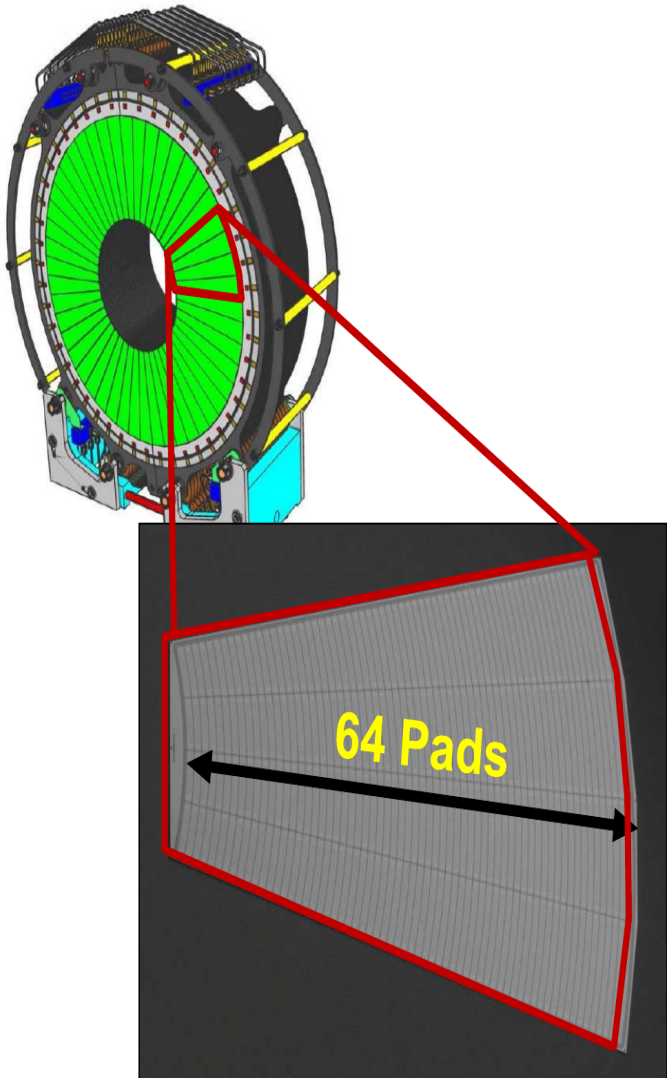

LumiCal- silicon-sensor prototype

A silicon-sensor prototype was produced by Hamamatsu :

- thickness 320μm.
- DC coupled with read-out electronics.
- p^+ implants in n^- type bulk.
- 64 radial pads, pitch 1.8 mm.
- 4 azimuthal sectors in one tile, each 7.5°.
- 12 tiles makes full azimuthal coverage.

.

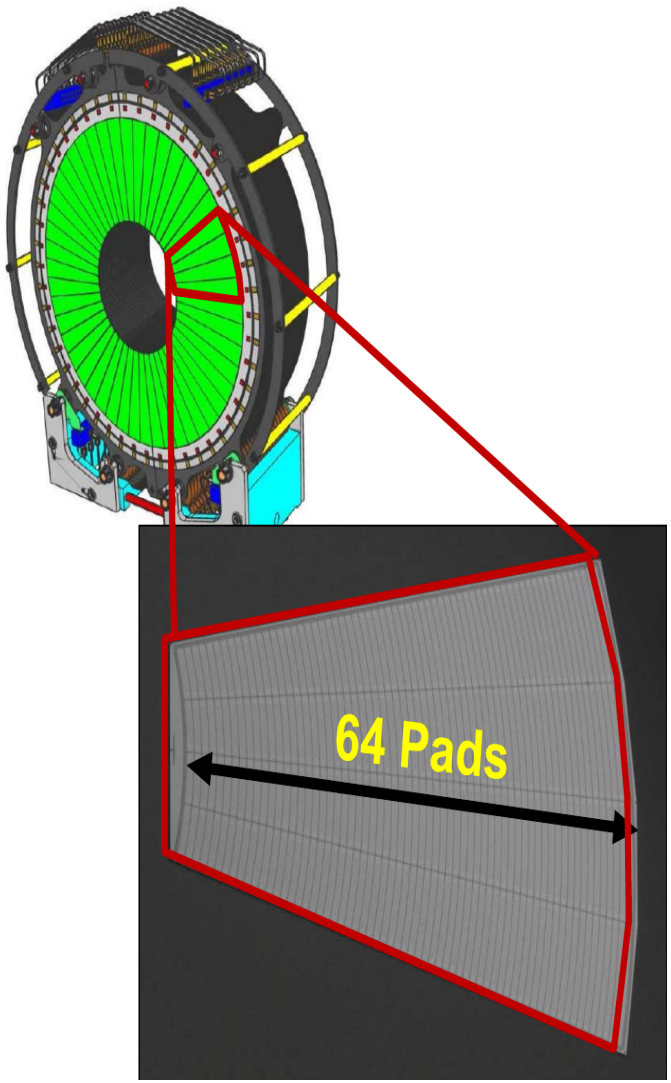

motivation

- A major design aim of LumiCal is it's compact structure.
- One aspect is to limit the development of the electromagnetic showers in the transverse direction.
- It allow better separation and identification of the electromagnetic element.

Moli'ere radius definition

The transverse development of electromagnetic showers in different materials scales fairly accurately with the *Moli'ere radius* $R_{\mathcal{M}}$, given by

$$R_{\mathcal{M}} = X_0 \frac{E_s}{E_c} \tag{1}$$

where $E_s \approx 21$ MeV, and E_c is the critical energy. In a compound the *Moli'ere radius* is given by

$$\frac{1}{R_{\mathcal{M}}} = \frac{1}{E_s} \sum \frac{w_j E_{cj}}{X_{0j}} = \sum \frac{w_j}{R_{\mathcal{M}}} \tag{2}$$

On the average,only 10% of the energy lies outside the cylinder with radius of 1 *Moli'ere radius*. The distributions are characterized by a narrow core, and broaden as the shower develops, often represented as the sum of two Gaussians.

density considerations

- In order to take in to effect the density the $R_{\mathcal{M}}$ units are $[gr/cm^2]$.
- During discussion on a structures and compounds the $R_{\mathcal{M}}$ is corrected for the density, ρ like

$$R_{\mathcal{M}}[cm] = \frac{R_{\mathcal{M}}[gr/cm^2]}{\rho[gr/cm^3]} \tag{3}$$

- We can calculate the $R_{\mathcal{M}}$ of the stack in different configuration using :

$$\frac{1}{R_{\mathcal{M}}[cm]} = \frac{\rho[gr/cm^3]}{R_{\mathcal{M}}[gr/cm^2]} = \rho \sum \frac{w_j}{R_{\mathcal{M}}} = \frac{W}{V} \sum \frac{W_j}{WR_{\mathcal{M}}} = \sum \frac{\rho_j \frac{Z_j}{Z}}{R_{\mathcal{M}}} \tag{4}$$

air gap

We can see the importance of the gap between absorbers in the calorimeter design on the the *Moli'ere radius* from the calculation :

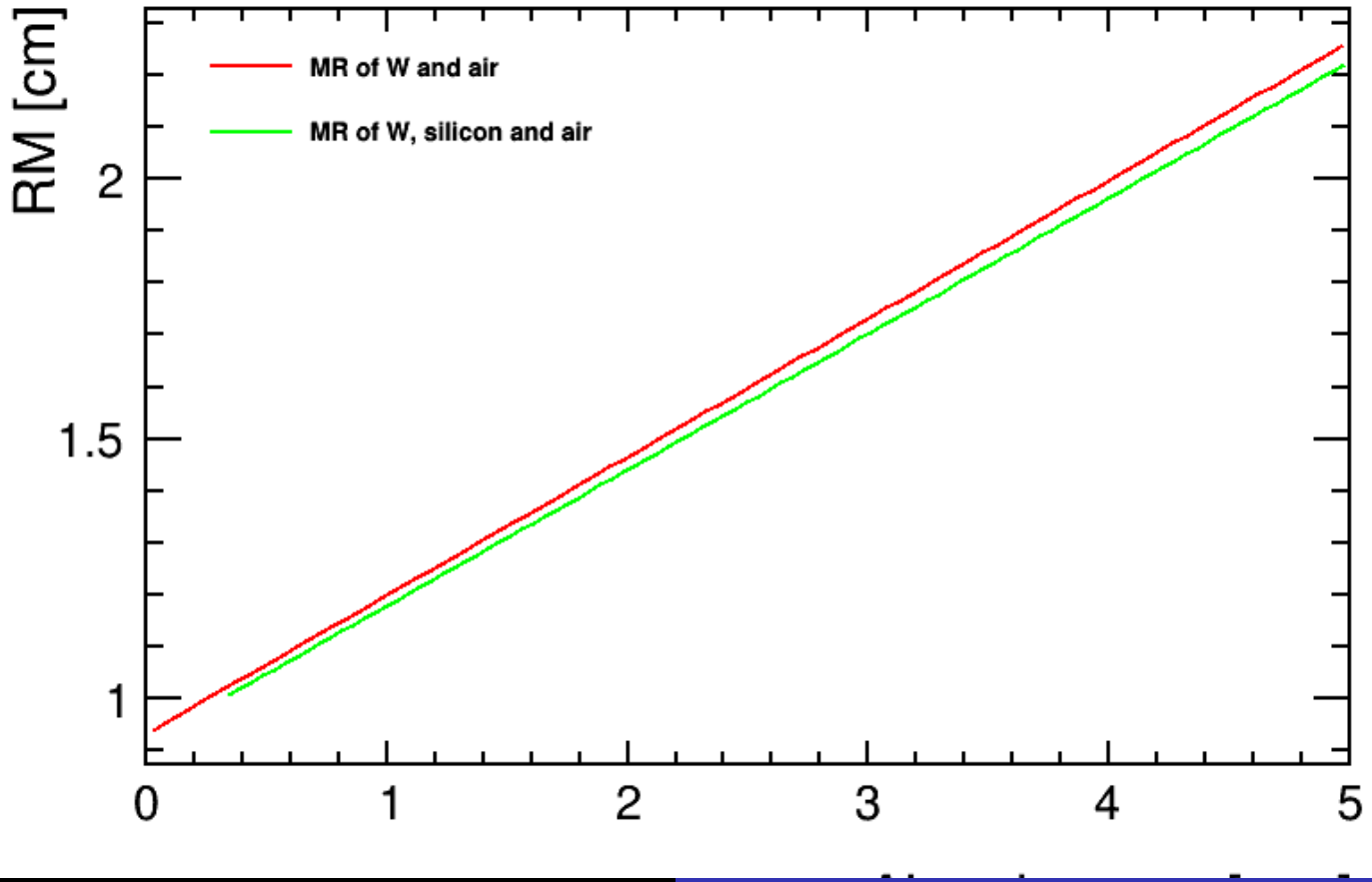

2014 TB - LumiCal basic plane

- The basic plane is a complete detector module equipped with first level DAQ.
- Its include the complete readout chain: Si-sensor, kapton fan-out, front-end electronic and multichannel 10-bit pipeline ADC ASIC
- ASIC is controlled by FPGA based data concentrator.
- The complete module has 4 multi channels chips with 8 channels each.

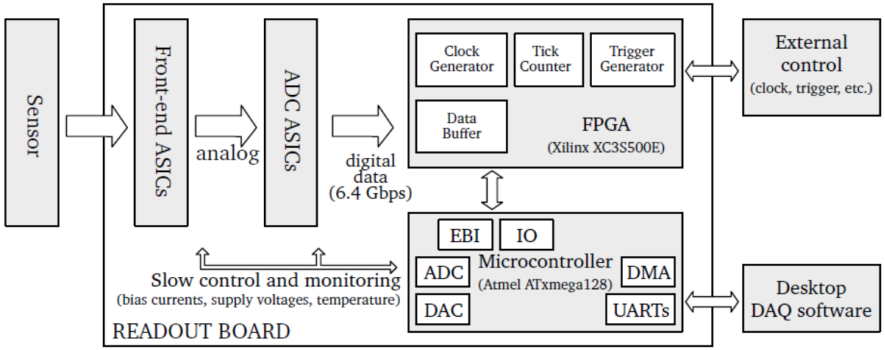

TB campaign

- The performance of fully instrumented LumiCal and BeamCal detector planes was studied in previous beam test campaigns.
- A full detector prototype is needed by the end of the AIDA-2020 project.
- 3 beam tests ware done up to now, at October 2014 and in 2015, 2016.
- To allow the multiple-plane operation, a sophisticated mechanical structure was developed at CERN to meet the demanding geometrical requirements.

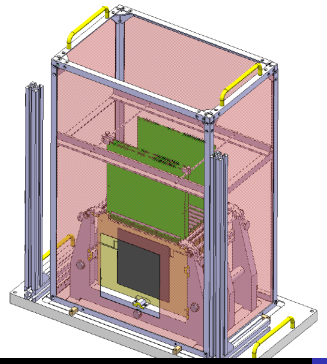

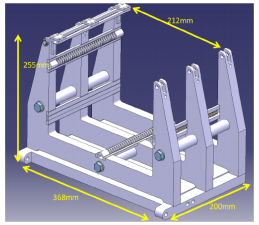

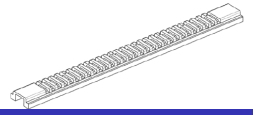

2014 TB

The first test performed in October 2014 at the T9 east area of the proton synchrotron (PS) at CERN. Test beam aims:

- to demonstrate for the first time that the base-design for calorimeters is reasonable and well understood.
- to test a multi-plane operation of the prototype.
- Study the development of the electromagnetic shower and compare with MC simulations.
- Try to apply a reconstruction algorithm on raw data and particle tagging (electron and hadrons).
- Attempt to measure energy resolution and the precision of the polar angle reconstruction.

2014 TB - beam

- The PS accelerator provides a primary 24 GeV/c proton beam.
- Beam for the T9 area is provided in 400 ms long spills
- The primary beam is converted using targets
- T9 provided with a 115 GeV/c, controlled, beam with muons, pions, hadrons and electrons.

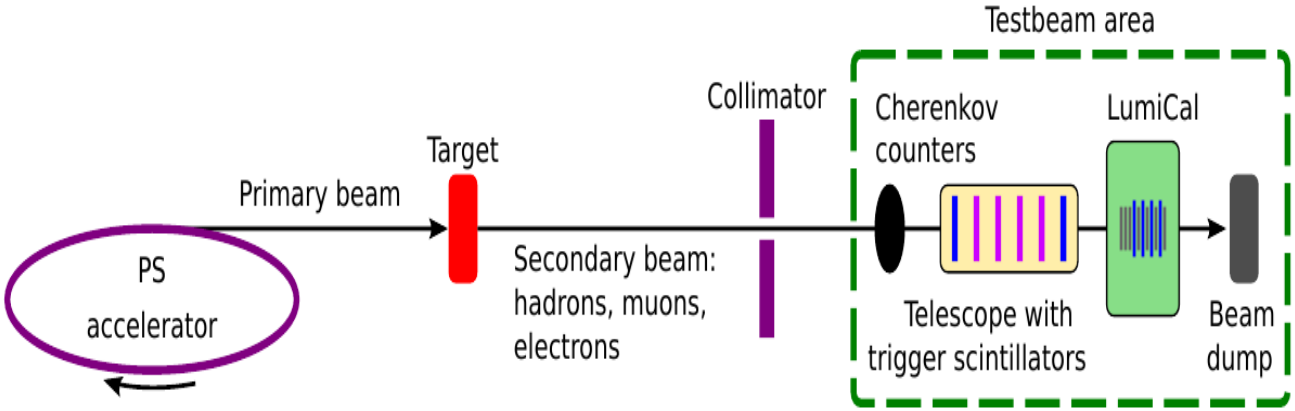

2014 TB - setup

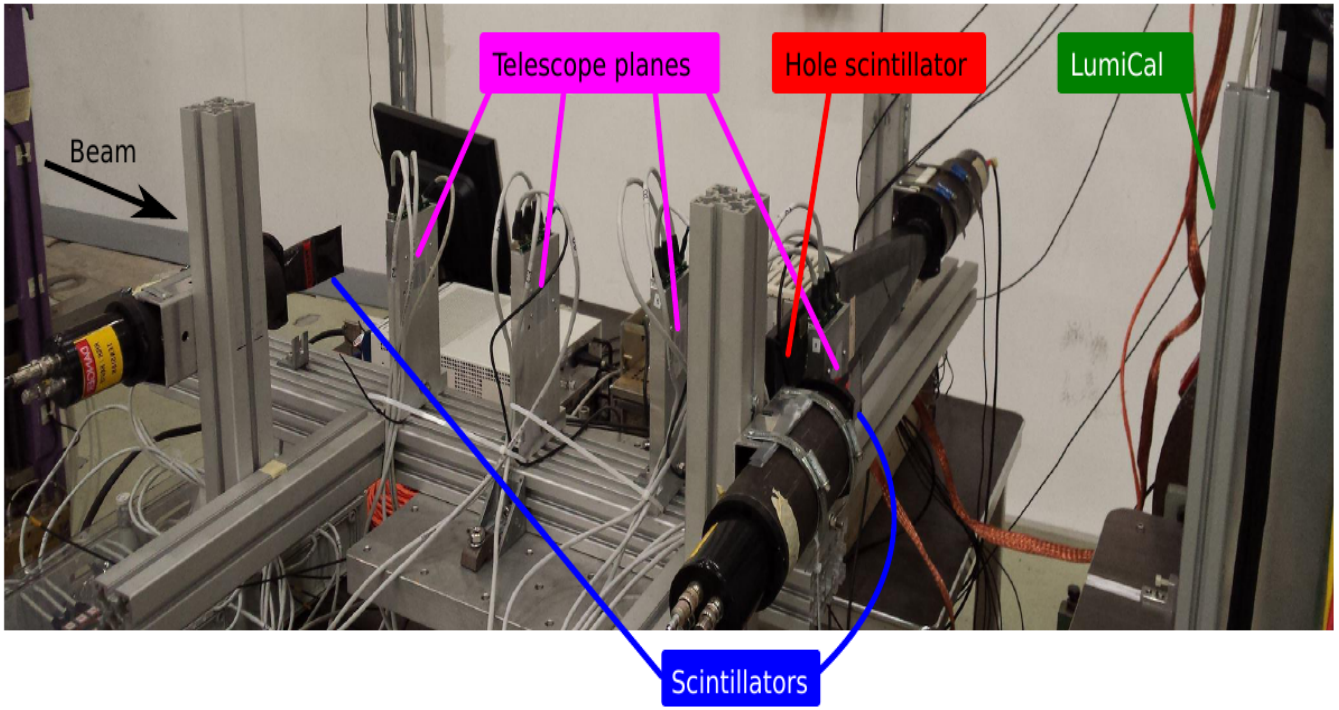

2014 TB - setup

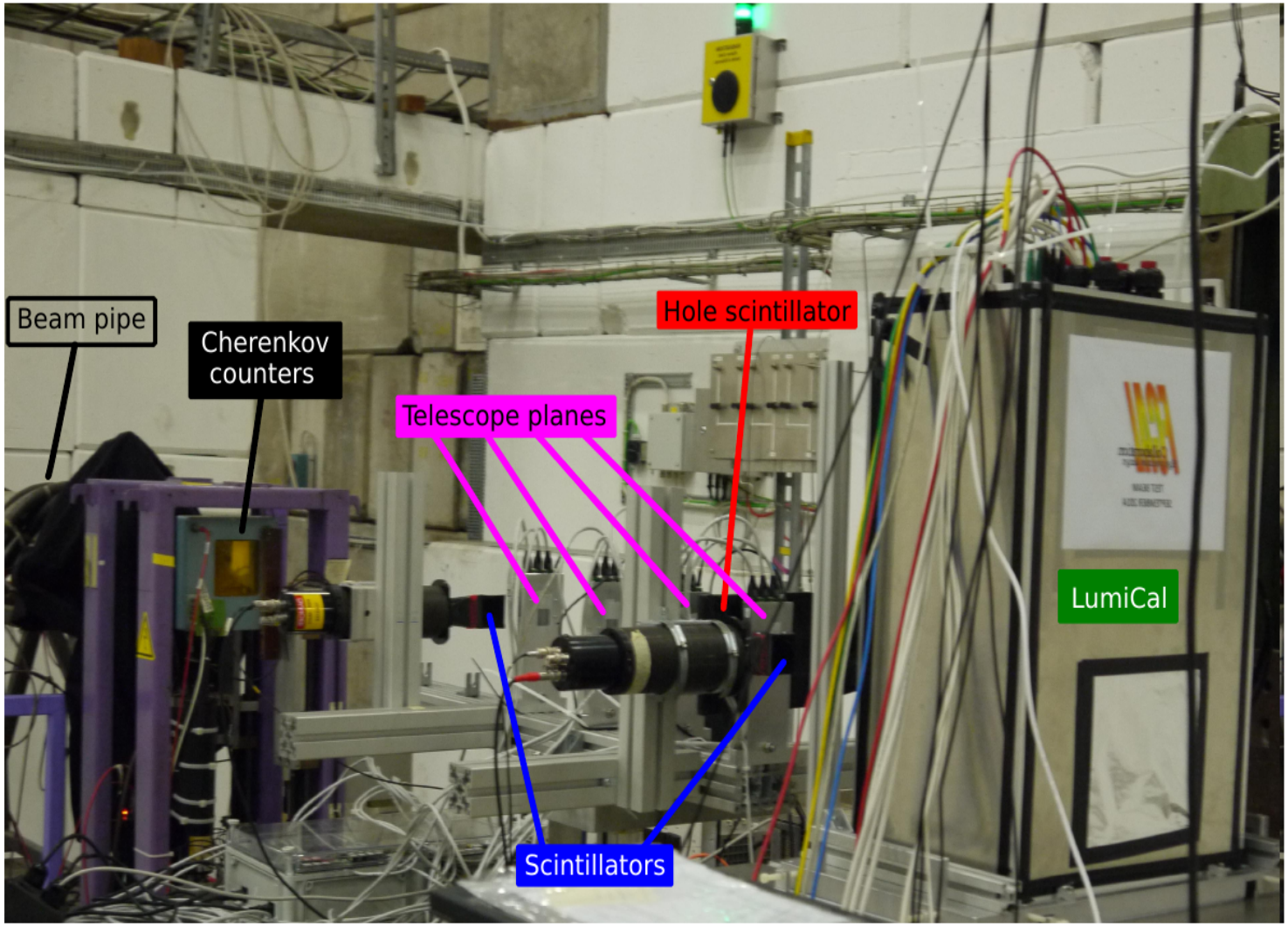

2014 configuration

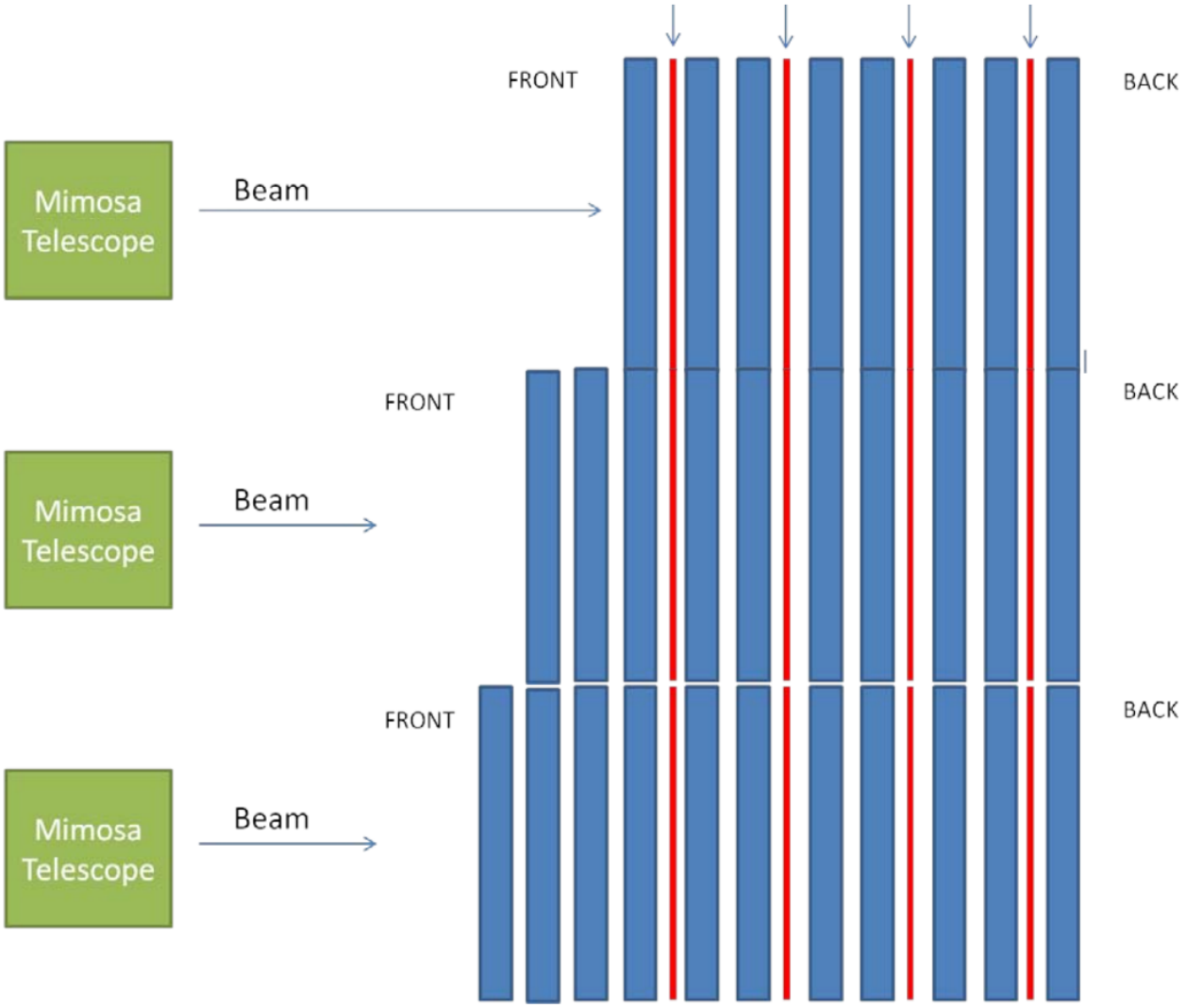

Moli'ere radius of 2014 configuration

Summery of all the material in our setup

material	W	Cu	Ni	PL-95%	MGS-93%	air	Si	PCB
density	19.3	8.96	8.9	18.0*	17.8*	0.0012	2.33	1.7
$R_{\mathcal{M}}[gr/cm^2]$	18.0	14.0	13.4	17.7**	17.6**	8.8	11.5	10.3
$R_{\mathcal{M}}[cm]$	0.93	1.57	1.51	0.98	0.99	7330	4.94	6.06

Summery of calculated *Moli'ere radius*

	PL-95%	MGS-93%	air	Si	PCB	total	$R_{\mathcal{M}}[cm]$
general 93	0	0.7	0.37	0.032	0.25	1.35	1.79
general 95	0.7	0	0.37	0.032	0.25	1.35	1.78
CONF 1	1.05	1.75	1.57	0.128	1.0	5.5	1.81
CONF 2	1.75	1.75	1.77	0.128	1.0	6.4	1.71
CONF 3	2.1	1.75	1.87	0.128	1.0	6.85	1.67

1 event

- For each event from the data or simulation, we can look on the sum of the energy deposit, along the radial direction.
- The sum of energy deposit include both instrumented sectors in all 4 sensor layers.
- The hit position can be estimate By fitting or by calculating the center of gravity.

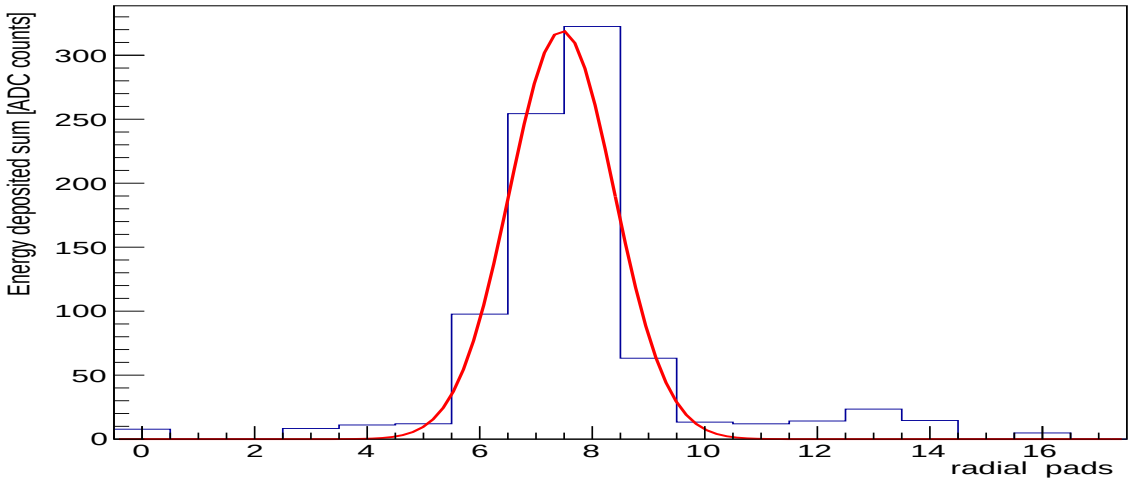

1 event

- For each event from the data or simulation, we can look on the sum of the energy deposit, along the radial direction.
- The sum of energy deposit include both instrumented sectors in all 4 sensor layers.
- The hit position can be estimate by fitting or by calculating the center of gravity.

$$Y_s = \frac{\sum_n n w_n}{\sum_n w_n}, \tag{5}$$

where :

$$w_n = max\left\{0; W_0 + \ln\frac{E_n}{\sum E}\right\}, \tag{6}$$

hit position

we can look for the W_0 that will give the best resolution:

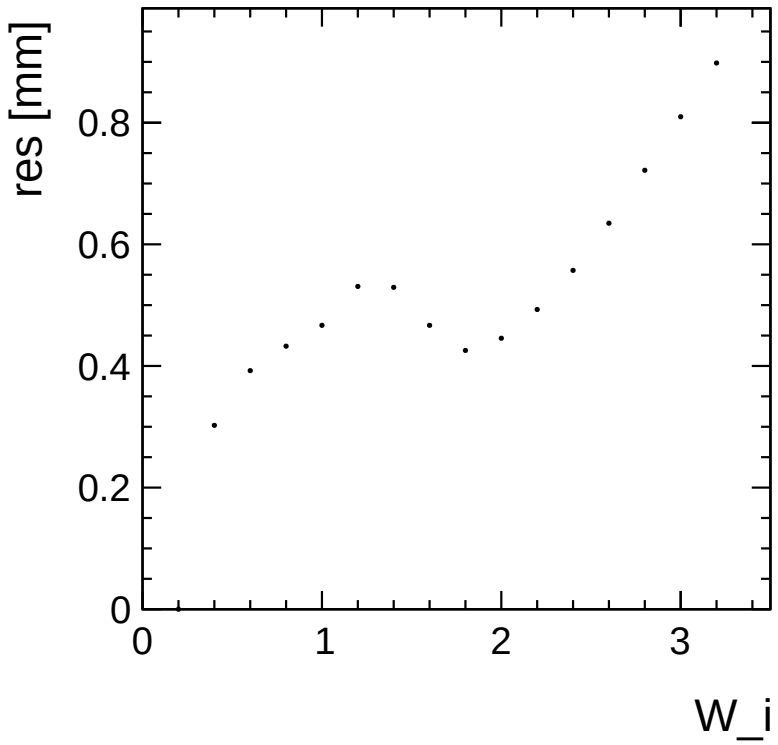

hit position

position reconstruction using $W_0 = 1.8$

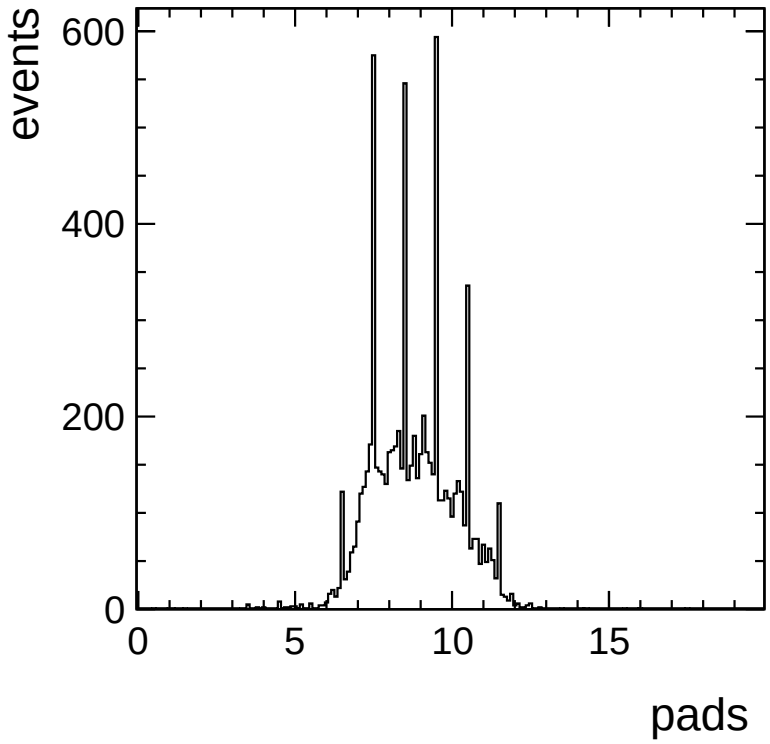

hit position

and the new version (using fit):

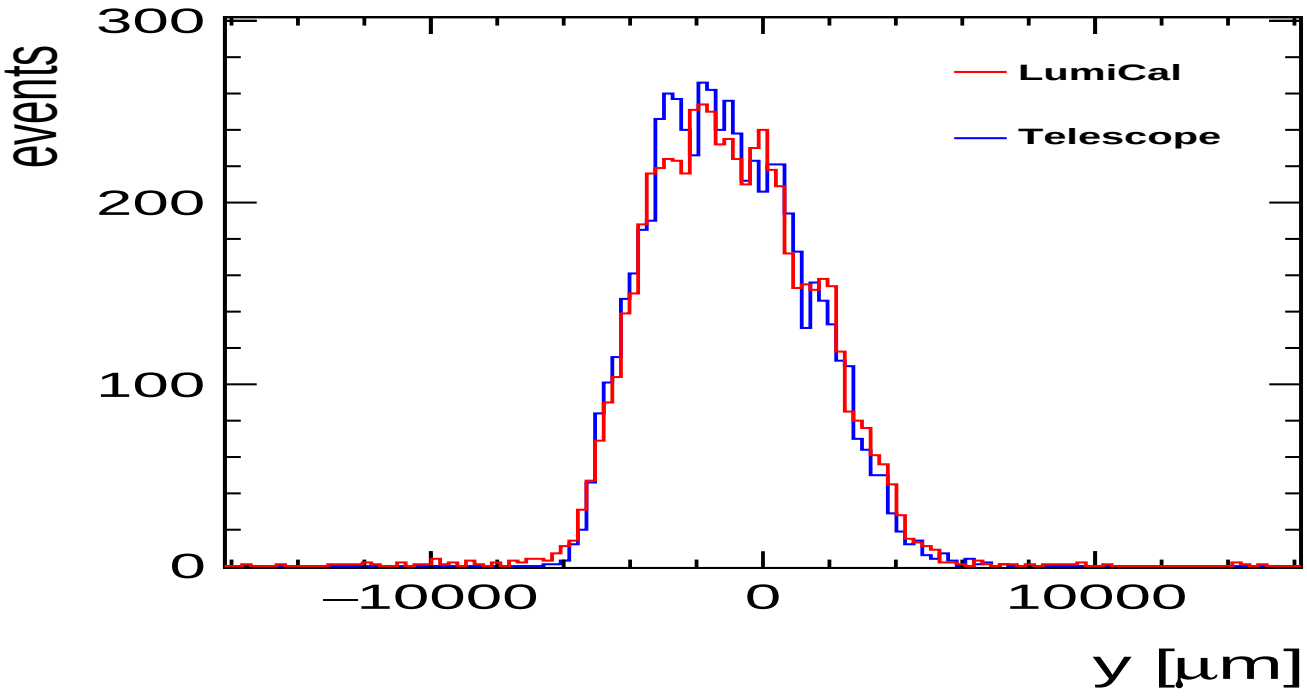

hit position

we also so :

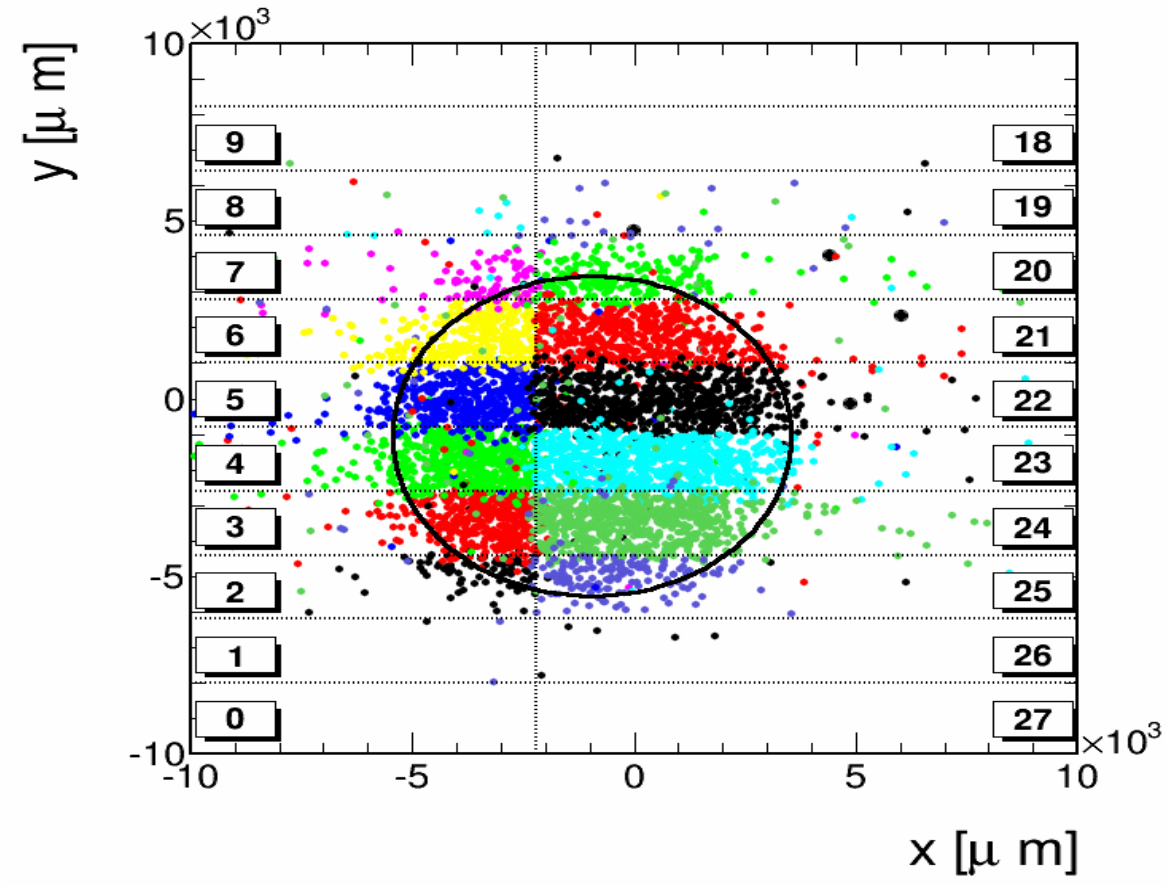

hit position resolution

We can compare between the LumiCal reconstructed hit position and the extrapolated hit position from the beam Telescope to the LumiCal first layer.

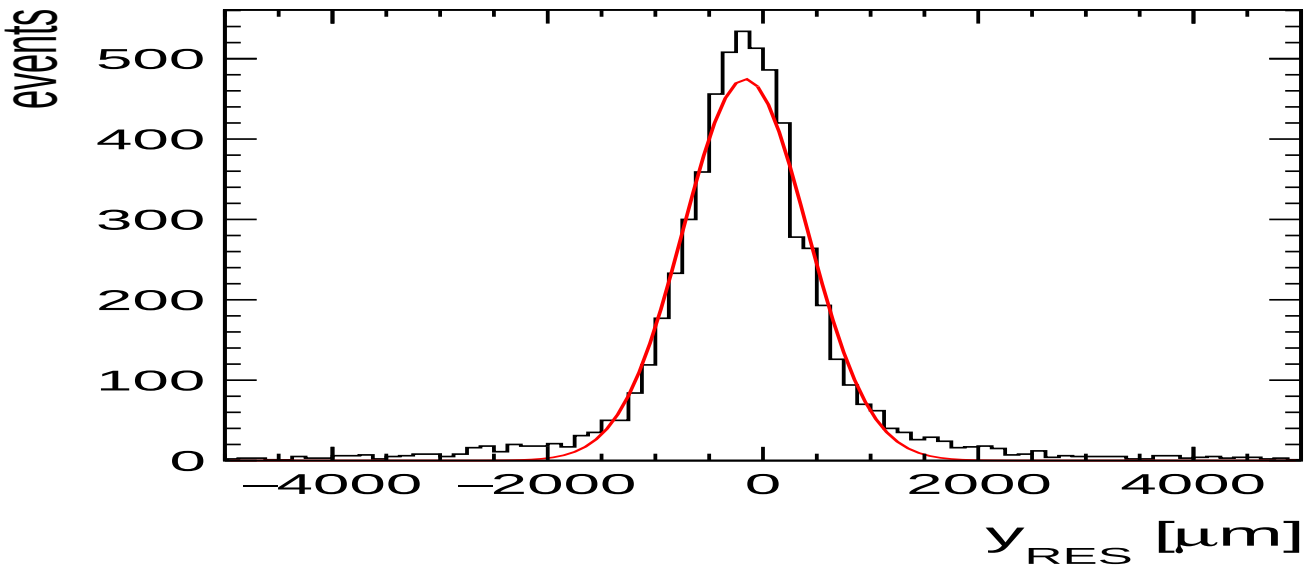

energy deposit

- By folding all events to start in a central pad the beam profile is canceled out.
- the mean radial energy deposit distribution can extracted from the single pad energy distribution.

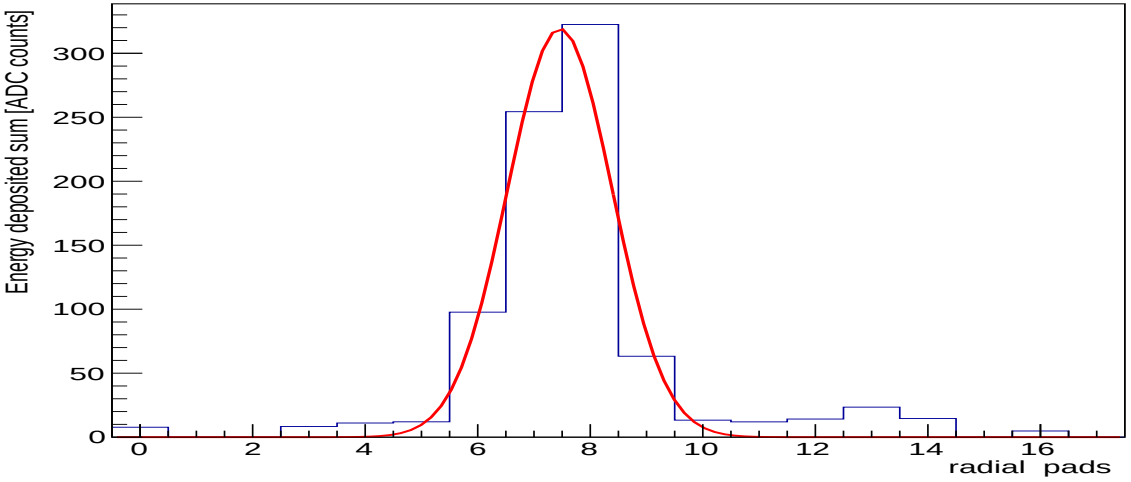

energy deposit

The pad energy deposit distribution (with 0, 1, 2, 3 from shower center):

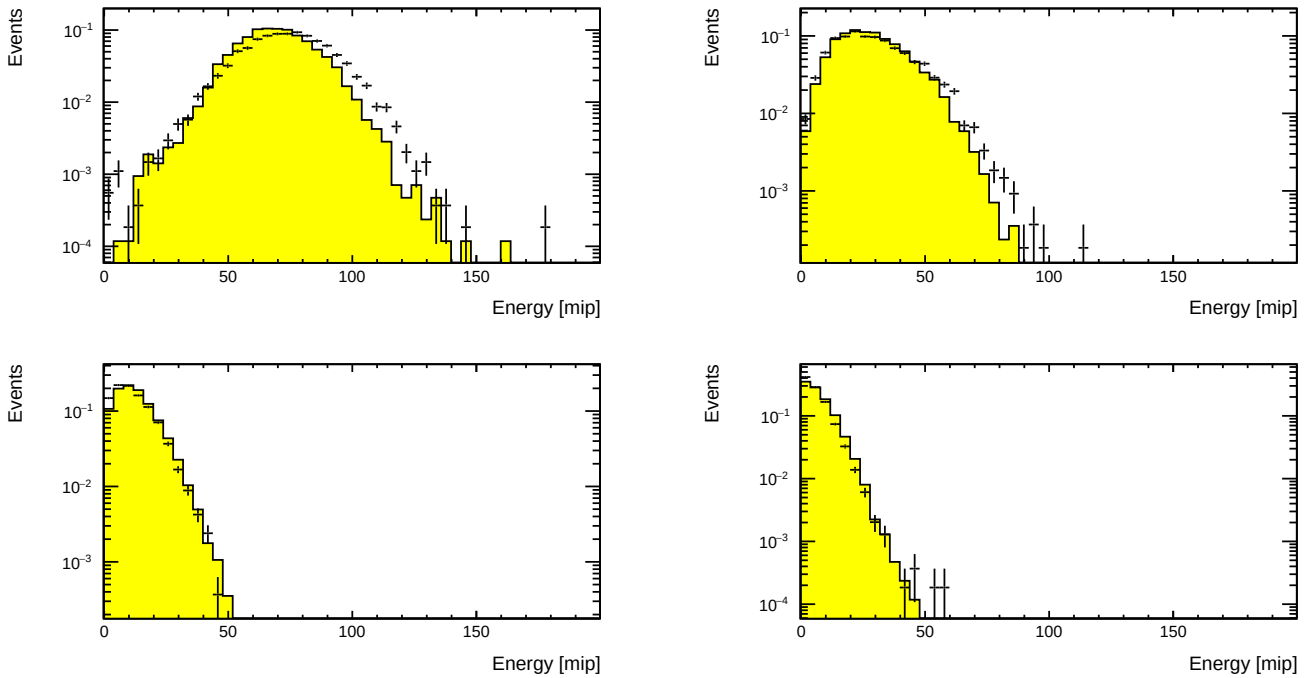

energy deposit

for different reconstruction :

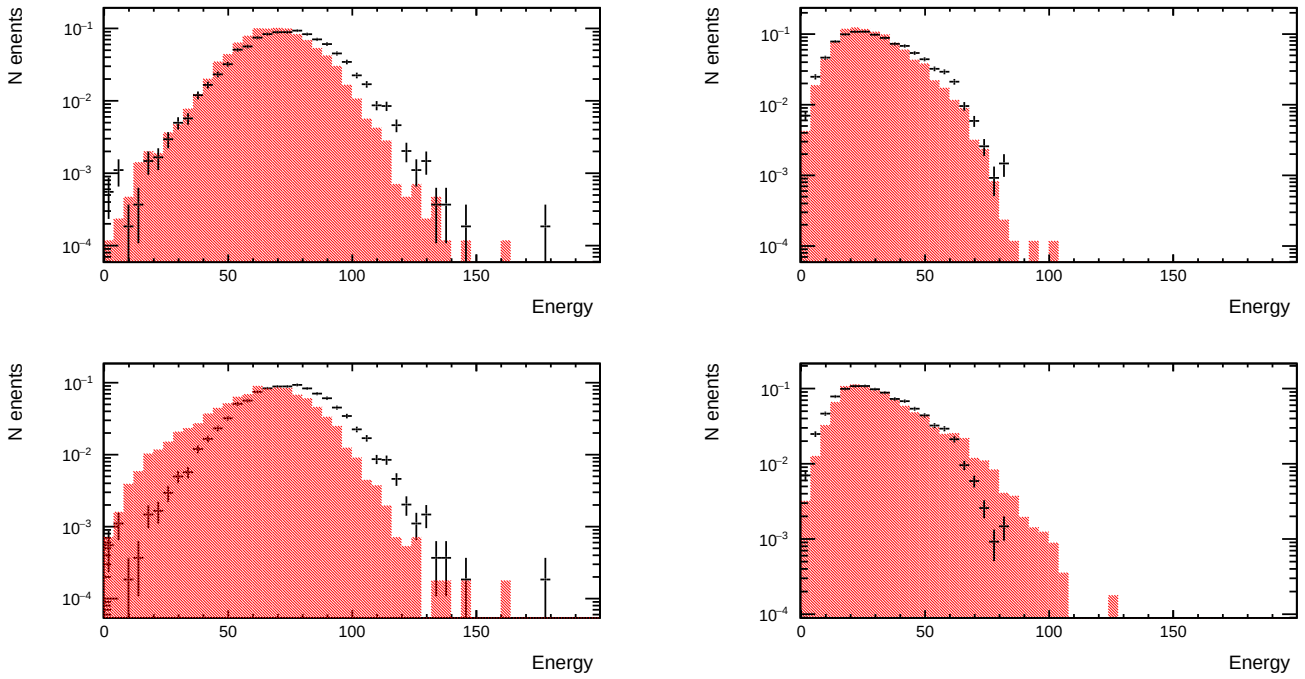

hit position resolution

In attempt to improve results from fit method the resulution is improve but reconstruction gives this results :

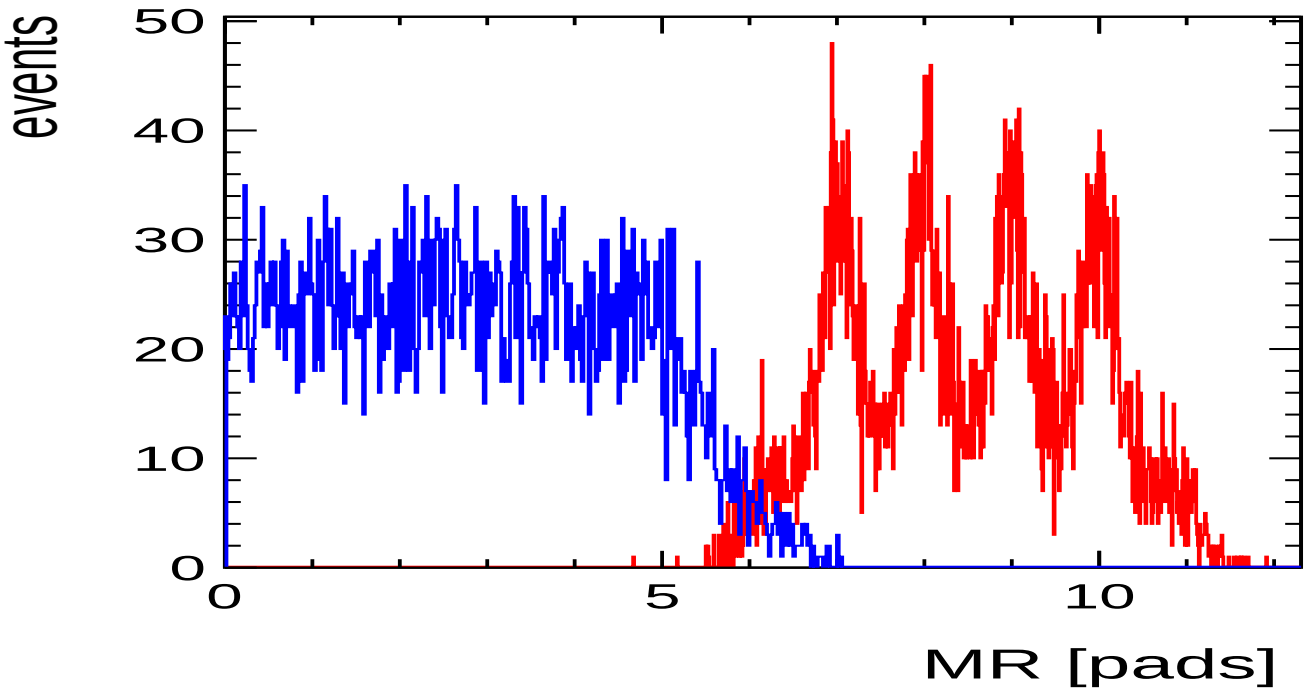

Radial energy distribution

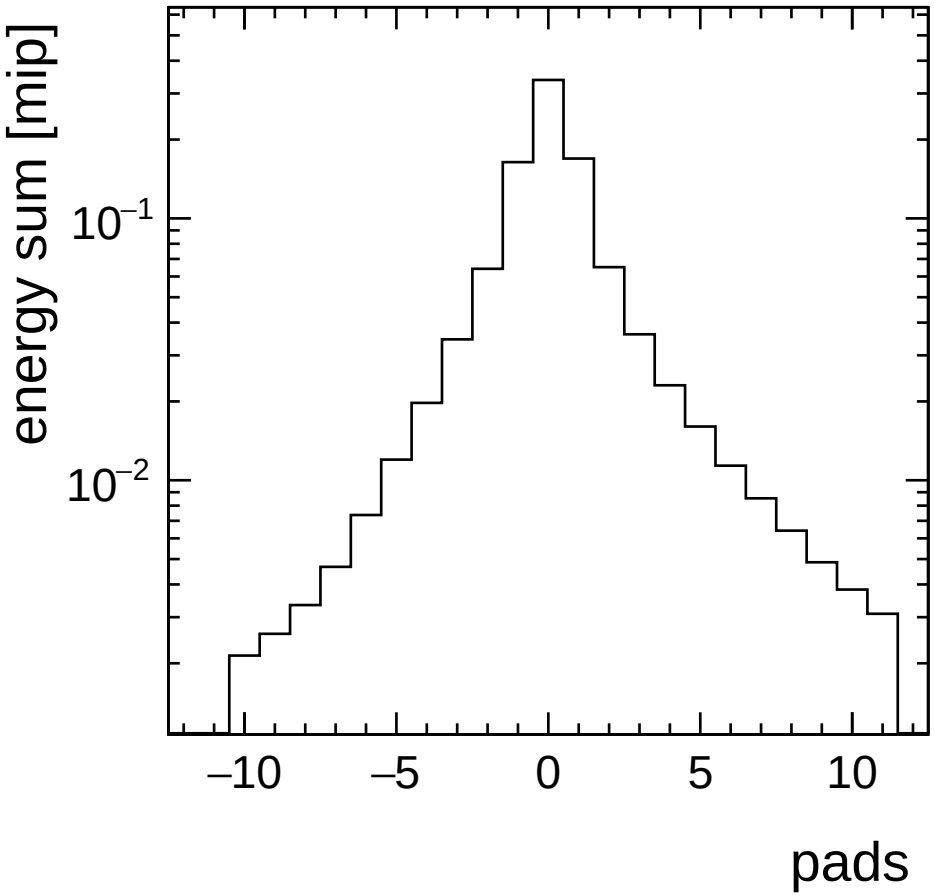

Radial energy distribution

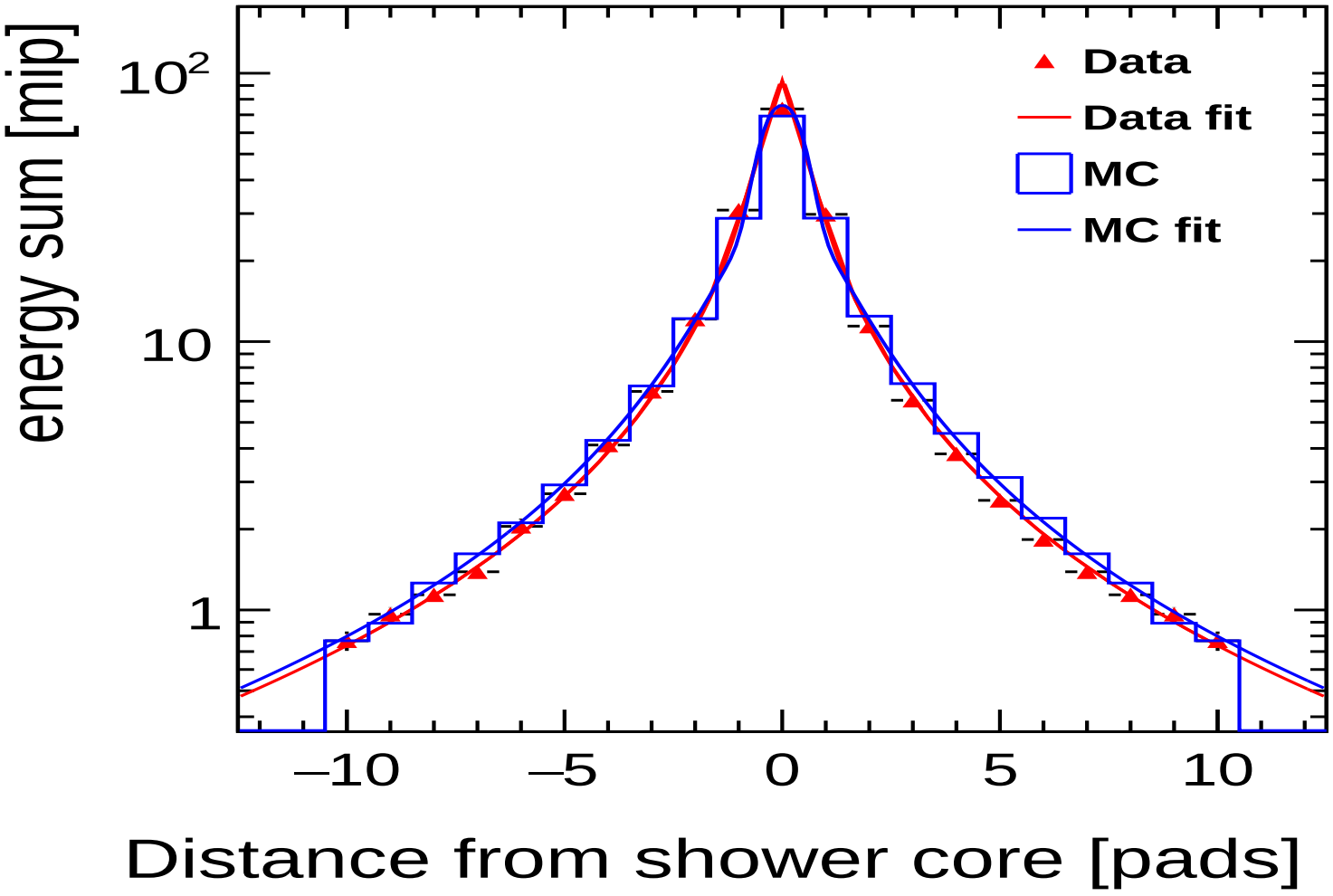

calculation

- The result is not direct from the fit we need to solve numericly :

$$0.9 = \int_0^{2\pi} d\varphi \int_0^{R_{\mathcal{M}}} F_E(r) r dr \ , \tag{7}$$

- LumiCal pads are long (strip like) and acts like 1 dimension integration, so we need to find:

$$G_E(y) = \int_{X_{min}}^{X_{max}} F_E(\sqrt{x^2 + y^2}) dx \ . \tag{8}$$

so we use :

$$F(r) = (A_C) e^{-(\frac{r}{R_C})^2} + (A_T) \frac{2rR_T^2}{(r^2 + R_T^2)^2} \ . \tag{9}$$

Moli'ere radius of 2014 configuration

Summery of calculated *Moli'ere radius*

	PL-95%	MGS-93%	air	Si	PCB	total	$R_{\mathcal{M}}[cm]$
CONF 1	1.05	1.75	1.57	0.128	1.0	5.5	1.81
CONF 2	1.75	1.75	1.77	0.128	1.0	6.4	1.71
CONF 3	2.1	1.75	1.87	0.128	1.0	6.85	1.67

fit model	bin center		integral		model difference
data set	$R_{\mathcal{M}}$ [mm]	χ^2/NDF	$R_{\mathcal{M}}$ [mm]	χ^2/NDF	
CONF1 - data	13.03	14 /16	10.58	15.8 / 16	1.23
CONF1 - MC	14.82	50 / 16	16.67	50.1 / 16	0.93
CONF2 - data	14.06	9.4 /16	15.13	9.5 / 16	0.54
CONF2 - MC	16.40	64.4 / 18	18.27	61.0 / 16	0.94
CONF3 - data	13.42	6.4 /16	14.79	6.3 / 16	0.69
CONF3 - MC	17.12	55 / 16	18.59	55.9 / 16	0.74

Summary

- *Moli'ere radius* measurement is very sensitive to folding.
- *Moli'ere radius* can by calculated from the 2014 TB data.
- MC simulation DD4Hep was prepared for paper.
- *Moli'ere radius* error can by calculated from psodo experiment (will be done after result we be stable).