AGH UNIVERSITY OF SCIENCE AND TECHNOLOGY

# Raport from the Hardware Working Group

Marek Idzik

Faculty of Physics and Applied Computer Science
AGH University of Science and Technology
Cracow Poland

29th FCAL Collaboration Workshop 16-20 September 2016 Tel Aviv Israel

# Main Objectives

- Presently the main Hardware Goal is to build a prototype of Compact Multilayer FCAL Detector
  - Within the AIDA-2020 project it is also our deliverable with the deadline in first part of 2019
- Proceeding with various hardware R&Ds: on sensors, ASICs, mechanics, alignment, DAQ, back-end electronics, …
- Test-beam preparation and data analyses – topic shared with Software&Analyses group...

# Summary of meetings held
# Technical info

- Frequency: every ~4 weeks

- 5 meetings from the last (March 2016) FCAL Workshop in Dubna – in total 25 meetings

- Duration: 1-1.5 hour

- Participation – seems good – always more than 5 people

# Summary of meetings held

Topics and presentations:

- Unvetoed tracks in TB2014, Strahinja Lukic
- Update about 2016 test beam, Yan Benhammou
- AIDA-2020 Krakow, Marek Idzik
- AIDA-2020 DESY, Lucia Bortko
- AIDA-2020 IFJPAN, Leszek Zawiejski
- AIDA-2020 TAU, Yan Benhammou
- Analyses of 2015 TB data, Yan Benhammou
- Status of BeamCal readout, Angel Abusleme
- Rad-hard sensors for BeamCal, Bruce Schumm
- Summary of AIDA-2020 Annual Meeting, Marek Idzik
- CERN test beam – Paper status, Aharon Levy
- TAU – Test-beam issues, Yan Benhammou
- Status of test-beam preparation, Oleksandr Borysov
- Status of TB2015, Aharon Levy
- Preparation of TB2014 paper, Aharon Levy

Main topics: new compact prototype (AIDA-2020), the paper, test-beams

# Progress&Status with HWG objectives

- The Main Hardware Goal for the next years is to build a prototype of Compact Multilayer FCAL Detector
  - Within the AIDA-2020 project, we have **milestone for ASIC and FPGA-based readout in April-May 2017**, and deliverable of compact calorimeter prototype in 2019

- Sensors: development of thin sensor module proceeds well at TAU/CERN – thin modules already used at test-beams (2015, 2016)
- ASICs: new LumiCal readout in progress at AGH-UST (Jakub's talk)
- **Back-end electronics: becomes urgent !** (we will discuss later, Leszek's talk)
- Mechanical frame: exists (CERN)
- Tungsten plates: we have a set of good plates, ongoing works at JINR ?

# Thin sensor modules at TAU/CERN

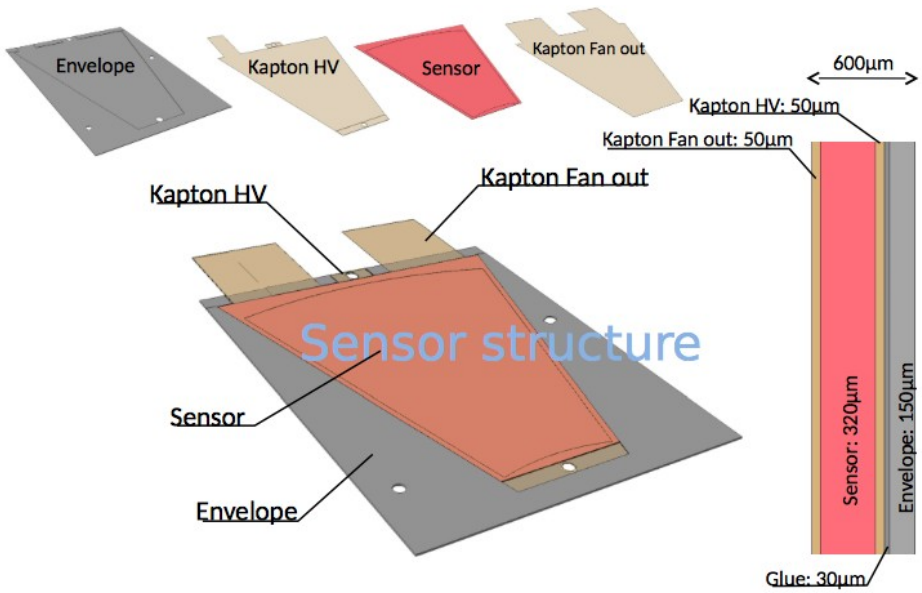


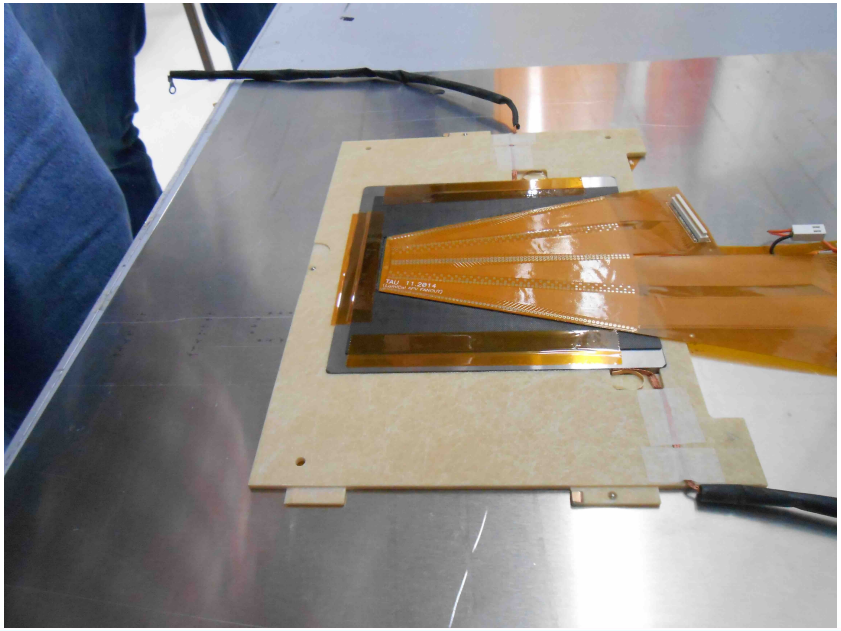

**Thin 800um sensor modules produced and already used in 2015 and 2016 test-beams**

# FLAME readout ASIC at AGH-UST

- Prototype ASIC comprising 8 almost fully functional FLAME channels:
  - Front-end with variable gain, differential CR-RC shaper, Tpeak = 50ns, ENC~900el@20pF
  - 10-bit multichannel SAR ADC
  - **Power (FE+ADC) <2mW/channel**

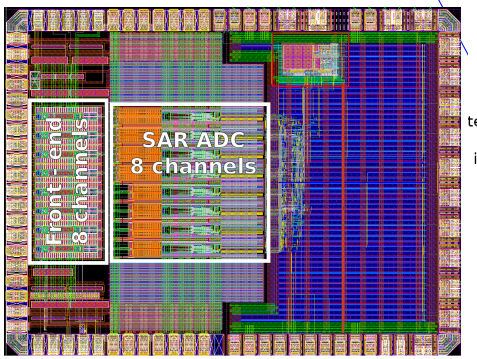


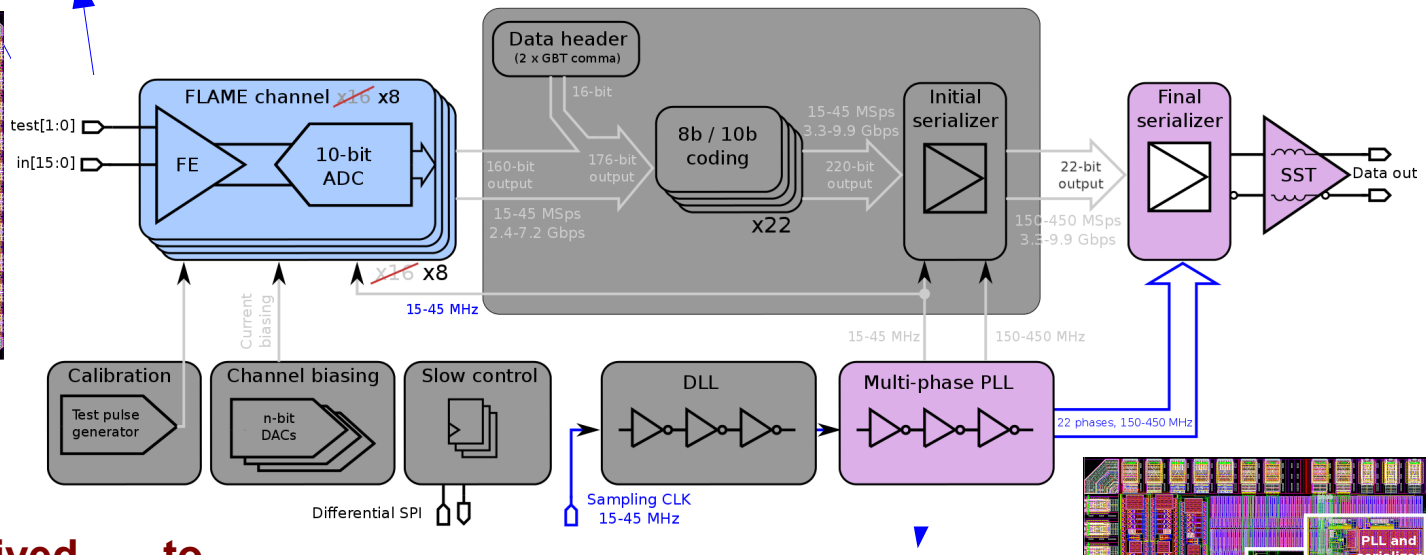


**Prototypes arrived to Cracow in March 2016. First tests started...**
**We aim to submit a 16-channel FLAME in 1st part of 2017**

- Prototype serializer ASIC comprising:
  - Fast ultra-low power multi-phase PLL
  - **Power <20mW@10Gbps**
  - Fast serializer 22b → 1b
  - Fast SST driver

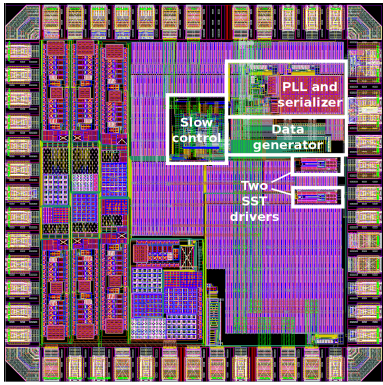

# Progress&Status with HWG objectives…

- Proceeding with various hardware R&Ds: on sensors, ASICs, mechanics, alignment, DAQ, back-end electronics, …

- radiation hardnes studies (Bruce talk later…) - has the time already come to decide something about sensors (Si in particular) ?
- Interconnection technologies – bumped fan-out (DESY)
- ASICs for BeamCal (Angel talk later) – can we / how far are we from common developments (1st item technology!) ?

# Radiation studies of BeamCal sensors at SLAC

Total BeamCal power

| Operating Temperature ($^0$C) | Total Power Draw (W) | Maximum for 1mm$^2$ Pixel (mW) |
|---|---|---|
| 15 | 56 | 23 |
| 7 | 25 | 10 |
| 0 | 11 | 4.6 |
| -7 | 4.5 | 1.9 |

**P-type Float Zone Si**
**Charge Collection after 2.7MGy=270Mrad**

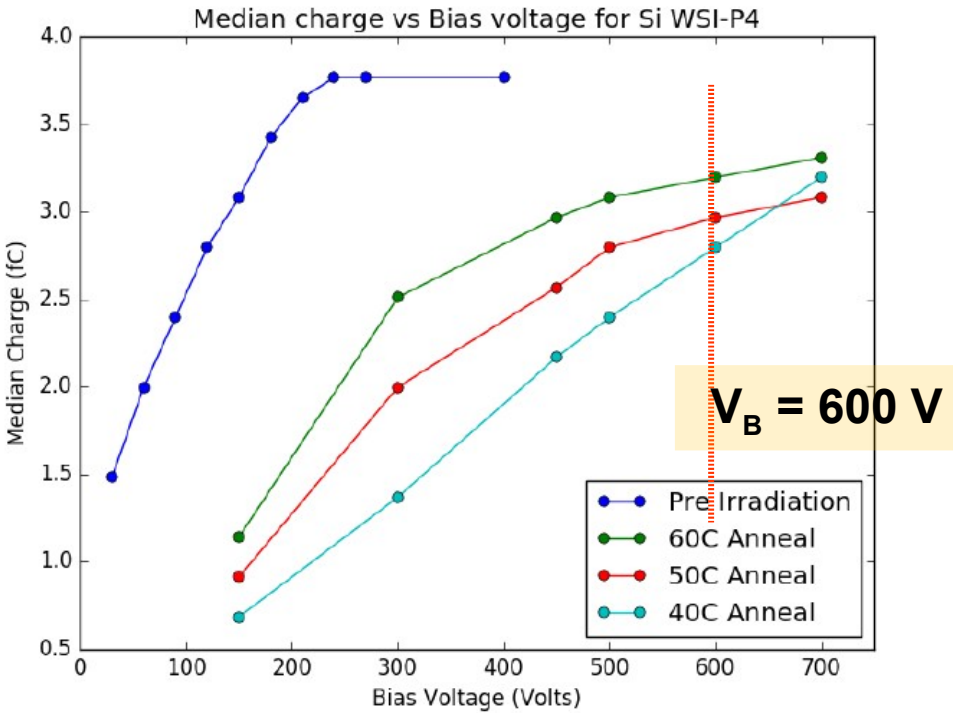


**@600 V, ~20% charge collection loss (60C annealing)**

Promising results with Si sensors

# Interconnection technologies at DESY

Studies of bumped fan-out are ongoing at DESY…

Gold covered GaAs from GSI, First Sample

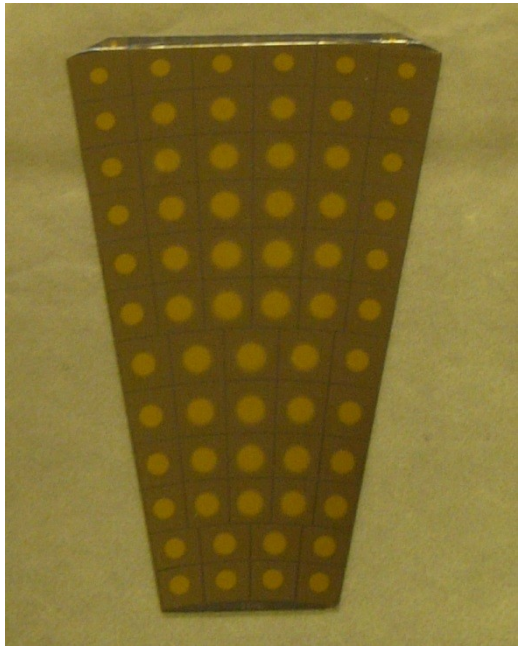

**“SAMTEC” interposer**
Standard height 1 mm
Custom - up to 0.5 mm

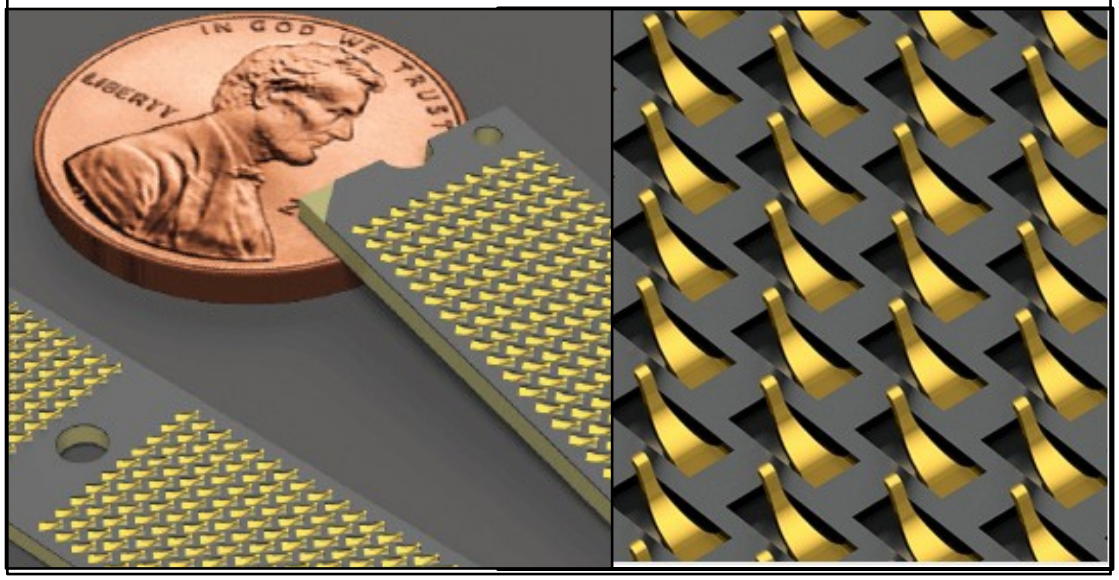

# Progress&Status with HWG objectives…

• Test-beam preparation and data analyses – these issues are shared between S&AWG and HWG group, and have been already discussed..., so only briefly

- TB 2014
  - Paper – should be discussed during the Workshop
- TB 2015-2016
  - My impression is that we lack man-power resources for analyses... ?

## Summary

- I do not have conclusions..., we are pushing the works forward, as usually there is a lot of work ahead...
- Thanks to everybody who contributed to the HWG meetings/works !

*Thank You for Attention*

*Questions, Comments, Proposals ?*

# Expressed interests
# Reminder – any change/update ?

- PUC (Angel); ASICs for BeamCal;  ~1 FTE
- SLAC (Bruce); Sensors, radiation damage; ~1 FTE
- ISS (Titi); Testbeams&Analyses, Sensors; ~1 FTE
- CERN (Konrad); Mechanical structure; ~1 FTE
- IFJPAN (Leszek); LumiCal sensors, Laser alignement; ~2 FTE
- JINR (Georgy); Tungsten, BeamCal sensors; ~2 FTE
- TelAviv (Itamar); LumiCal sensors, Testbeam&Analyses, DAQ; ~2 FTE
- DESY (Wolfgang); BemCal sensors, Testbeam&Analyses, conn., ~2 FTE
- AGH-UST (Marek); ASICs for LumiCal, testbeam&analyses, ~3 FTE