TEL AVIV UNIVERSITY
אוניברסיטת תל אביב

Luminosity and Beamtuning Calorimeters in the very Forward Region

Yan Benhammou

On behalf of the FCAL Collaboration

Partly support by the European Union Horizon 2020 Research and Innovation program (AIDA-2020)

Tel Aviv University, Tel Aviv, Israel
Pontificia Universidad Catolica de Chile, Santiago, Chile
NC PHEP, Belarusian State University, Minsk, Belarus
DESY, Zeuthen, Germany
Vinca Institute of Nuclear Sciences, University of Belgrade, Serbia
JINR, Dubna, Russia
IFIN-HH, Bucharest, Romania
IFJ PAN, PL-31342, Krakow, Poland
CERN, Geneva, Switzerland
Faculty of Physics and Applied Computer Science, Krakow, Poland
ISS, Bucharest, Romania
Tohoku University, Sendai, Japan
Aarhus University, Aarhus, Denmark
University of California, Santa Cruz, USA

outlook

- Simulation
- Hardware
- Electronics
- conclusion

- **Simulation**
- Hardware
- Electronics
- conclusion

FCAL detector purposes in future e+e- linear accelerators

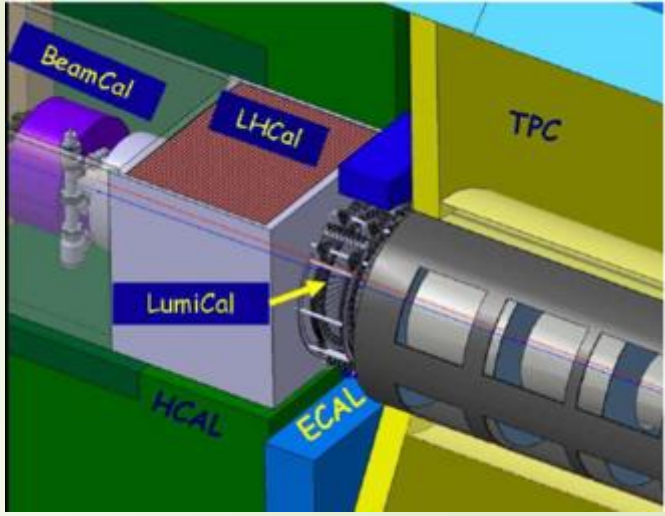

- LumiCal :
  - Precise integrated luminosity measurements (Bhabha events)
  - Extend calorimetric coverage to small polar angles. Important for physics analysis
- LHCal :
  - Extend the hadronic calorimeter coverage
- BeamCal :
  - Measure instant luminosity. feedback for beamtuning
  - tagging of high energy electrons to suppress backgrounds to potential BSM process
  - shielding of the accelerator components from the beam-induced background
  - providing supplementary beam diagnostics information extracted from the pattern of incoherent-pair energy depositions

FCAL detector designs in future e+e- linear accelerators

- LumiCal :
  - Electromagnetic sampling calorimeter
  - layers of 3.5 mm thick tungsten plates with 1 mm gap for silicon sensors (30 for ILC, 40 for CLIC)
- LHCal :
  - Sampling Calorimeter
  - 29 layers of 16mm thickness. Absorber : tungsten or iron
- BeamCal:
  - Sampling calorimeter based on tungsten plates (30 layers for ILC, 40 layers for CLIC)
  - Due to large dose, rad hard sensors (GaAs, Diamond, Sapphire)

FCAL detector simulation in future e+e- linear accelerators

- ILC
  - Geometry model of FCAL (positions, internal structure) is implemented, updated according to new L*
  - Reconstruction software for LumiCal and BeamCal present (FcalClusterer Marlin module) adopted for DD4HEP
  - Simulations within DD4hep environment and validation started
- CLIC
  - LumiCal and BeamCal reconstruction working with DD4hep geometry
  - LumiCal and BeamCal reconstruction performance since moving code shows decent results.

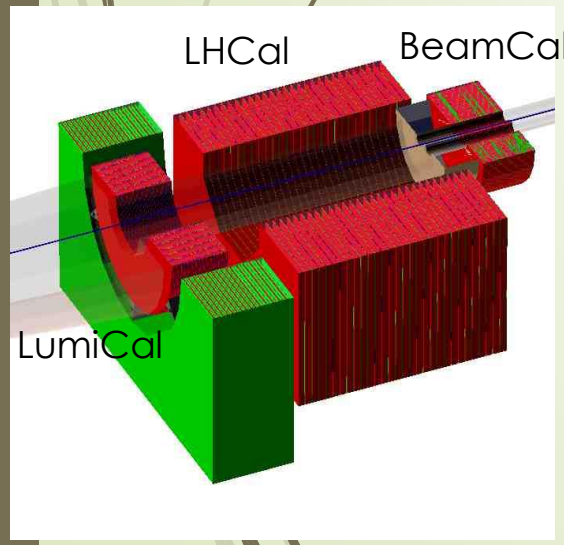

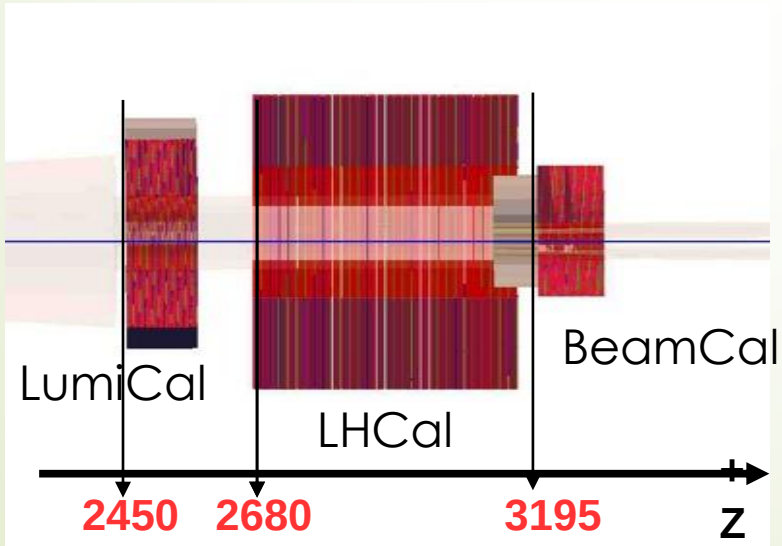

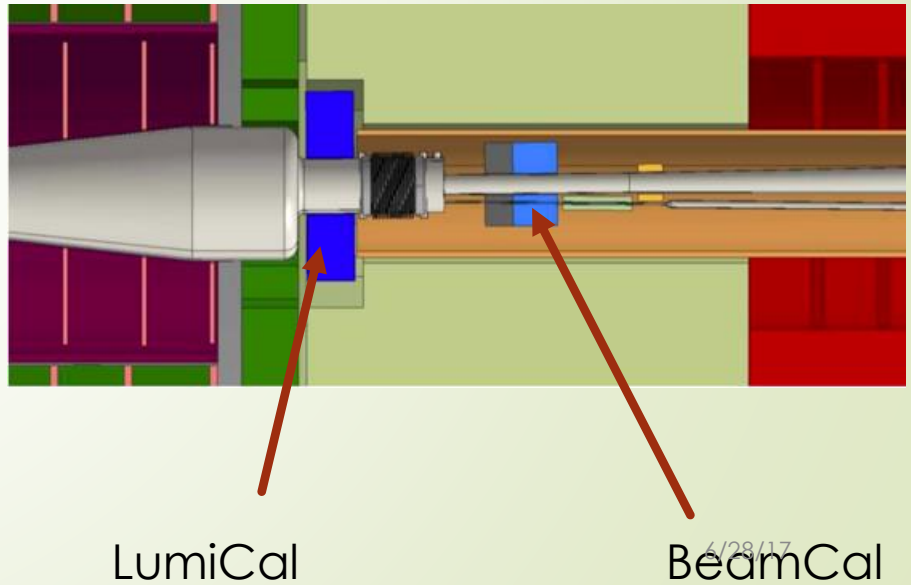

BeamCal simulation in future e+e- linear accelerators

- Cover the angles between 10 mrad (CLIC)/6 mrad (ILC) to 43 mrad
- Different methods of background generated :
  - "Pregenerated" based on MC event
  - "Gaussian" based on estimation of the energy deposition in each pad
- Reconstruction :
  - Cluster algorithm : pad clustering after subtraction of average background
  - Shower fitting algorithm : estimation of the profile of the shower from electron

CLIC simulations

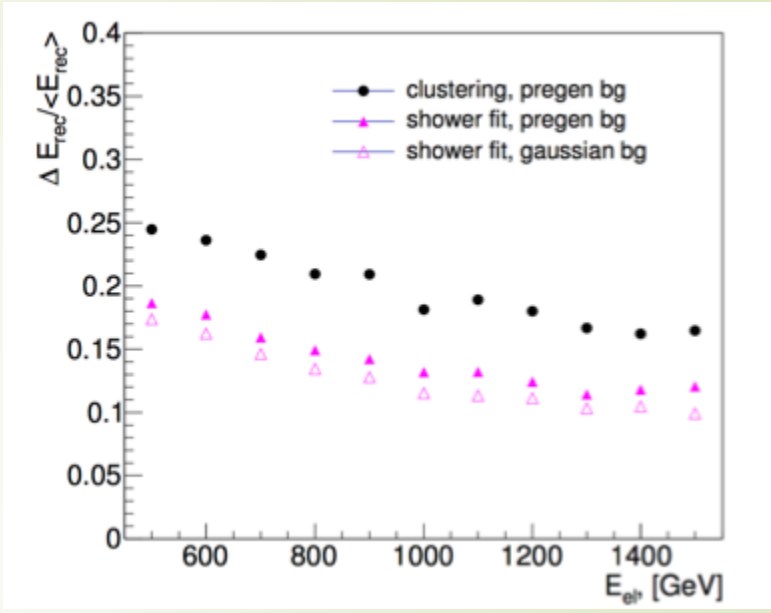

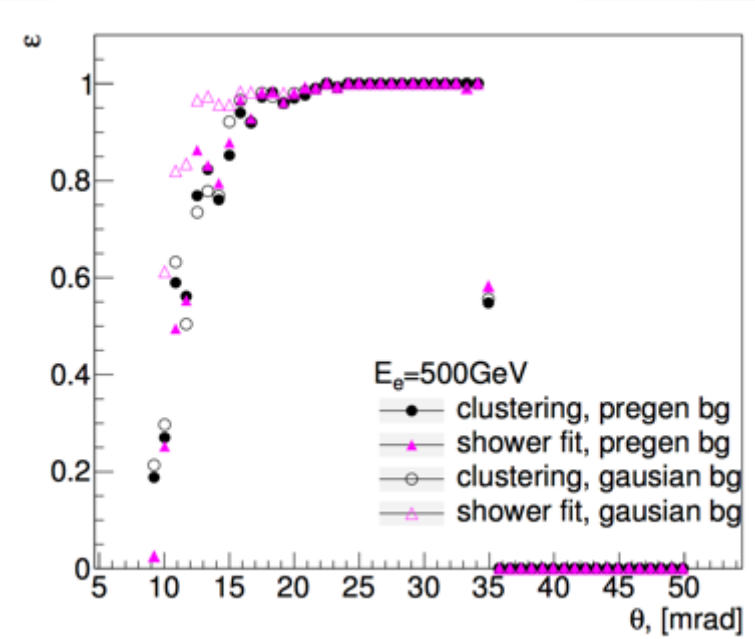

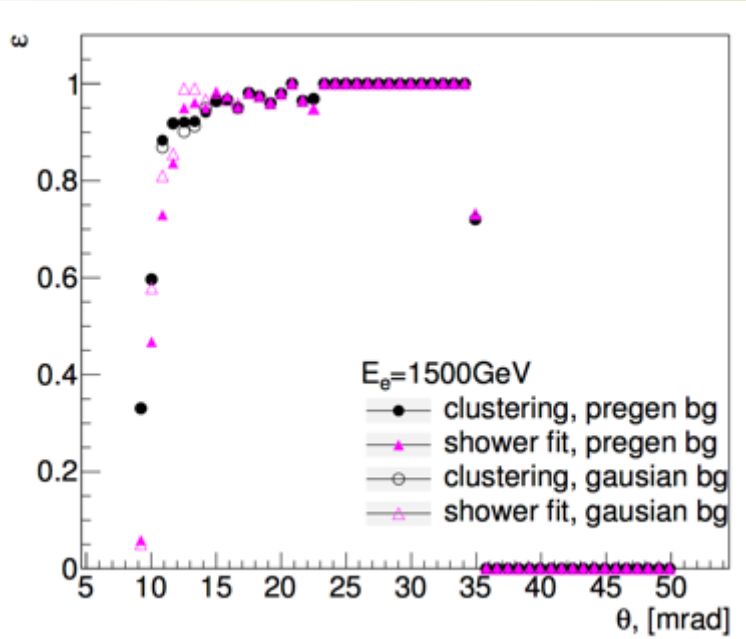

LumiCal simulation in future e+e- linear accelerators

- Cover the angles between 41 mrad to 67 mrad
- Polar angular pad size calculated to obtain the given precision of luminosity measurement
- Simulation of the energy resolution
- Moliere radius estimation for compactness study

$$\frac{\sigma_E}{E} = \frac{a_{res}}{\sqrt{E_{beam}\ (GeV)}}$$

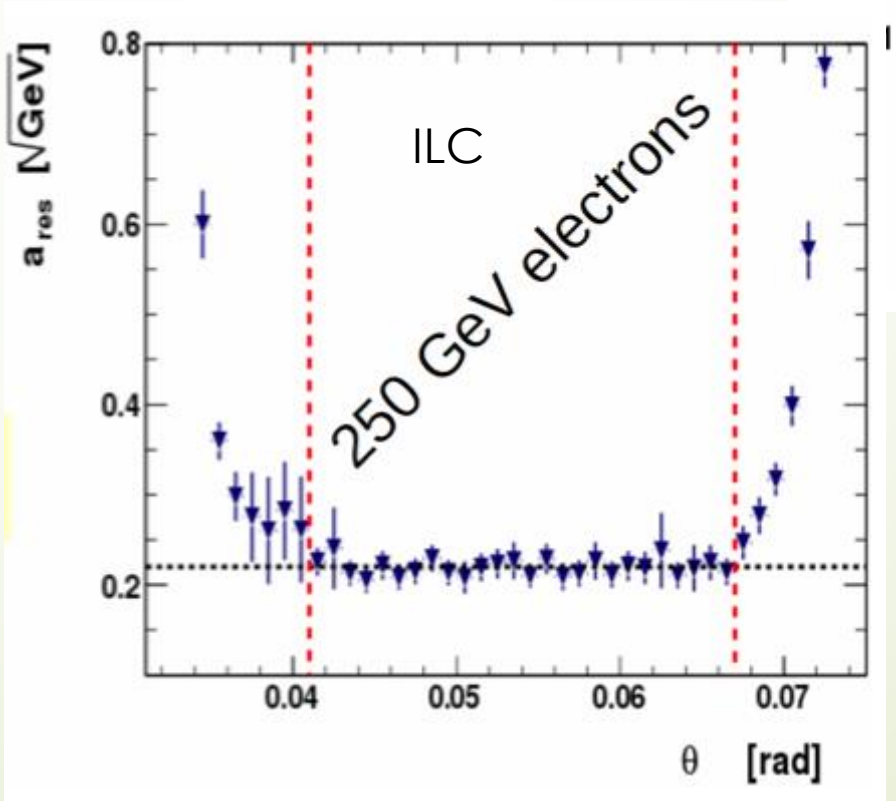

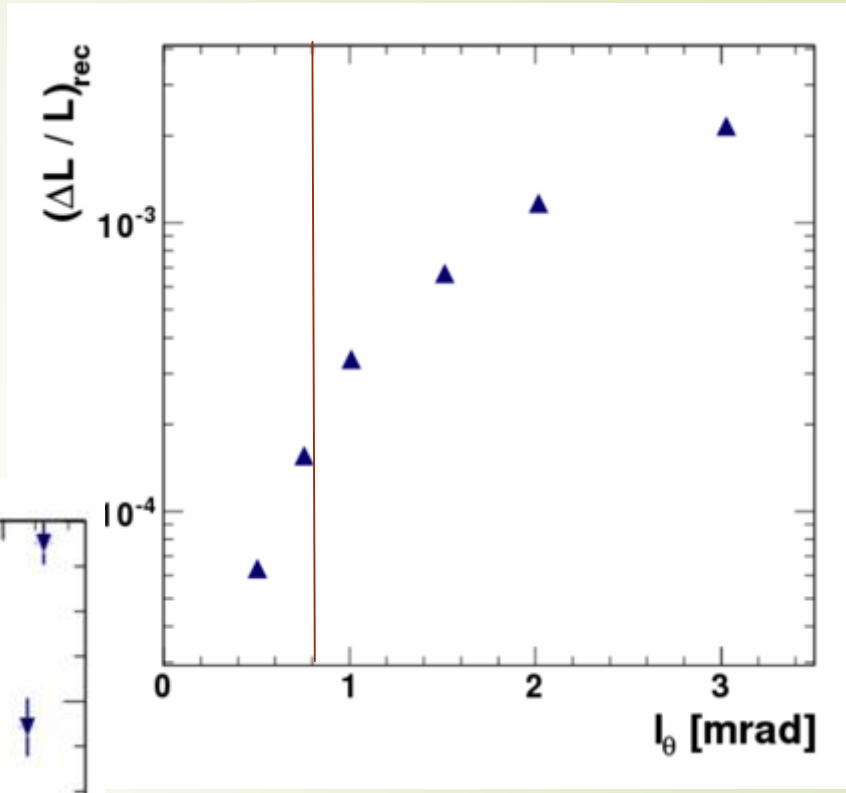

For l_θ =0.8 mrad, $\Delta L/L = 1.6\ 10^{-4}$

LHCal simulation in future e+e- linear accelerators

- Located between the LumiCal and BeamCal
- Total thickness : 463 mm
- Simulation of tungsten-Si and iron-Si with different incident particles

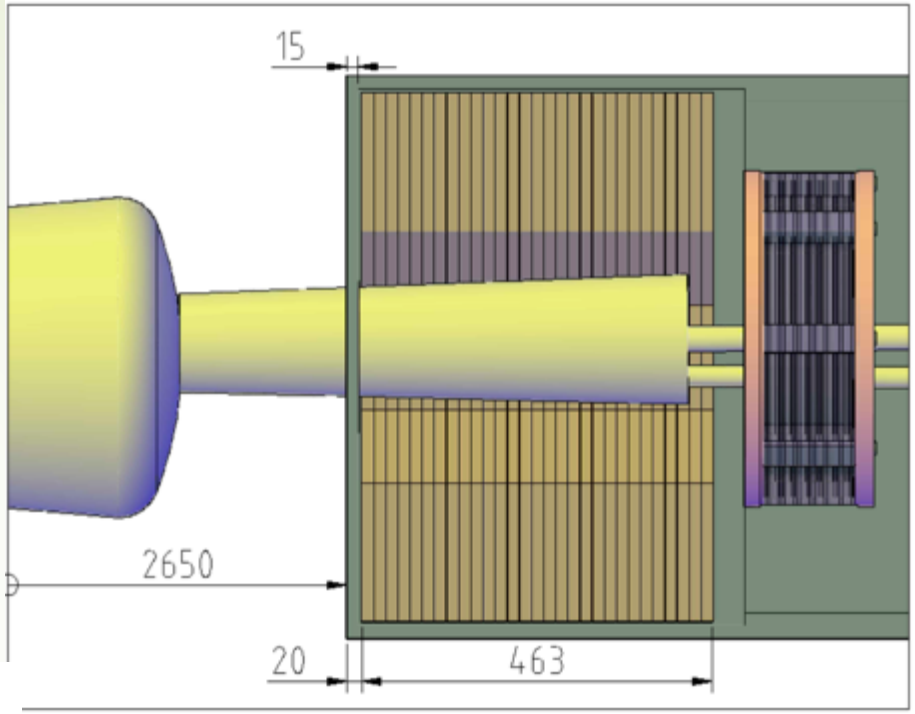

Fe

Particle	A, GeV$^{1/2}$	B, 10^{-2}	C, GeV$^{-1/2}$
Lepton	0.197±0.001	1.68±0.28	0.0±0.001
Hadron	0.83±0.09	0.22±0.06	0.023±0.008

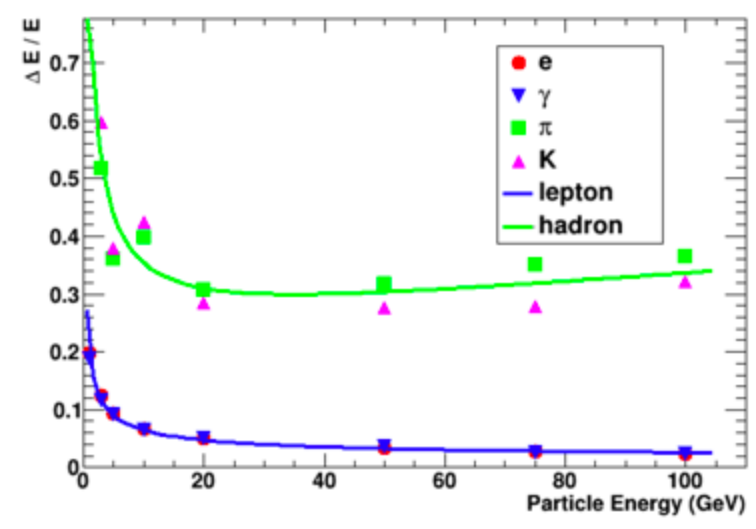

W

Particle	A, GeV$^{1/2}$	B, 10^{-2}	C, GeV$^{-1/2}$
Lepton	0.437±0.007	0.02±1.78	0.0±0.002
Hadron	0.74±0.04	11.2±2.23	0.0±0.031

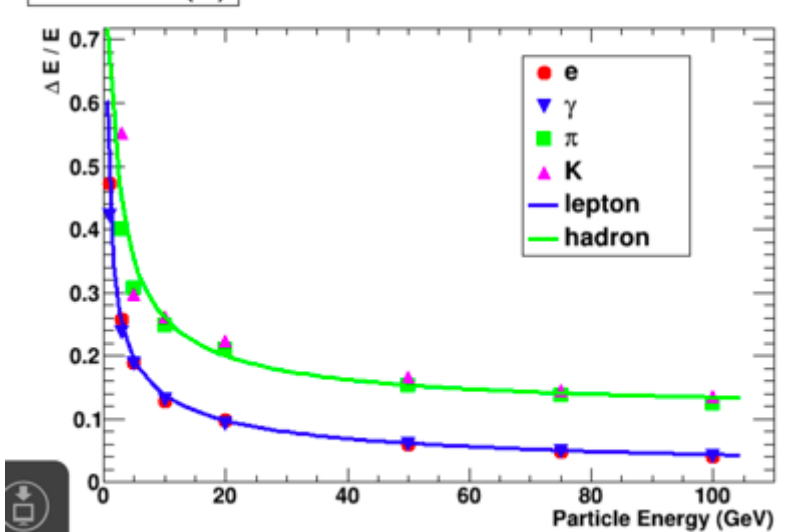

$$\frac{\Delta E}{E} = \frac{A}{\sqrt{E}} \oplus B \oplus C\sqrt{E}$$

Tungsten looks to be a good candidate

- Simulation
- **Hardware**
- Electronics
- conclusion

LumiCal sensor

- Silicon senor, 320 μm thickness
- 64 radial pads, pitch 1.8 mm
- 4 azimuthal sectors in one tile, each 7.5 degrees
- 12 tiles make full azimuthal coverage
- p+ implants in n-type bulk
- DC coupled with read-out electronics
- 40 modules were produced by Hamamatsu

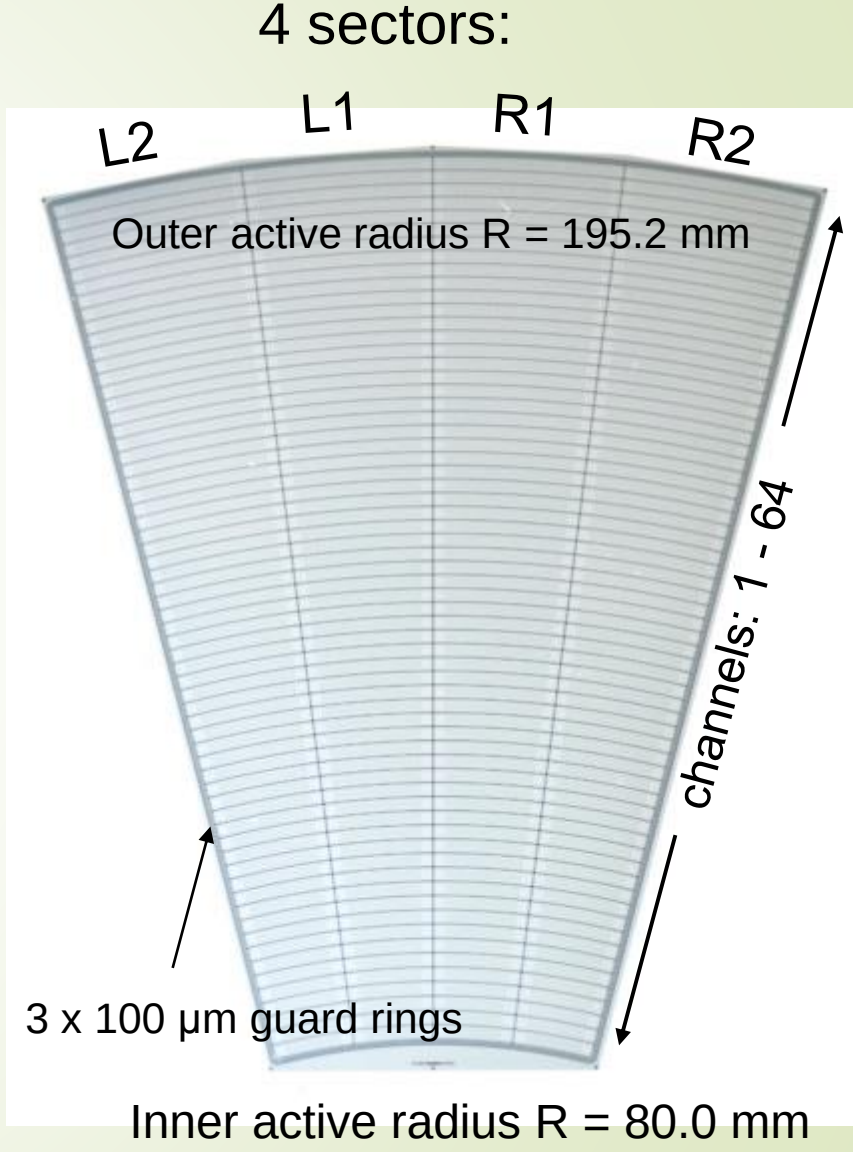

LumiCal test at CERN in 2014

- 4 LumiCal modules equipped with dedicated electronics (32 channels) glued on a 2.5 mm PCB
- 3.5 mm between tungsten plates
- Tested in test beam at PS with 5 GeV e-/μ

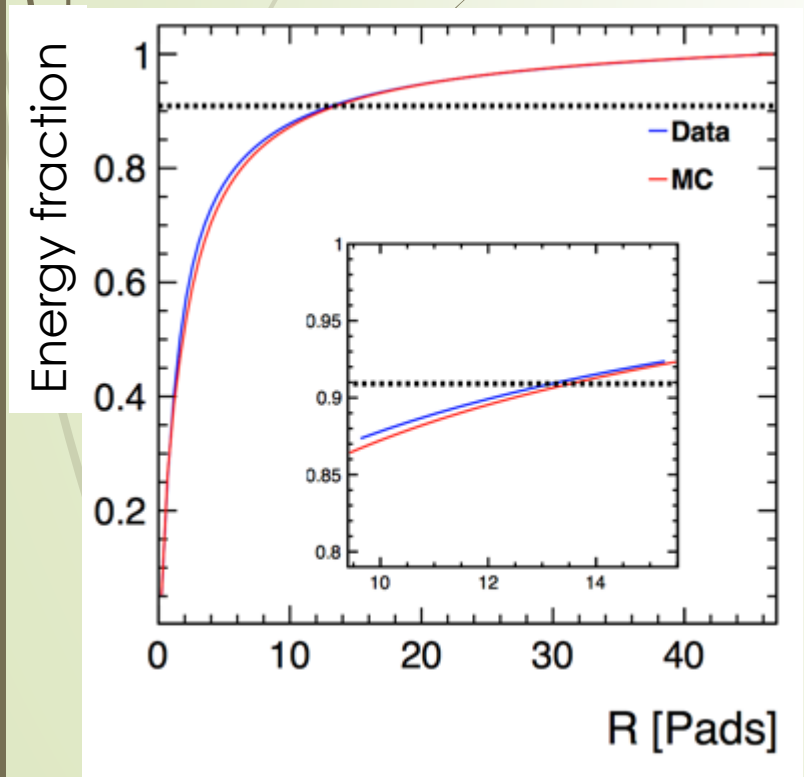

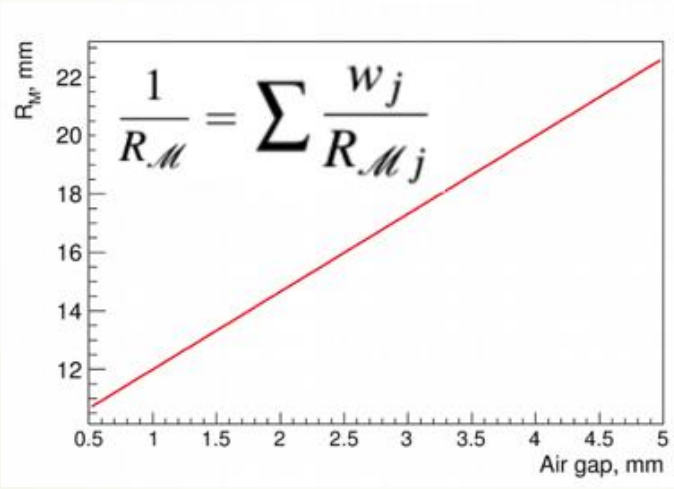

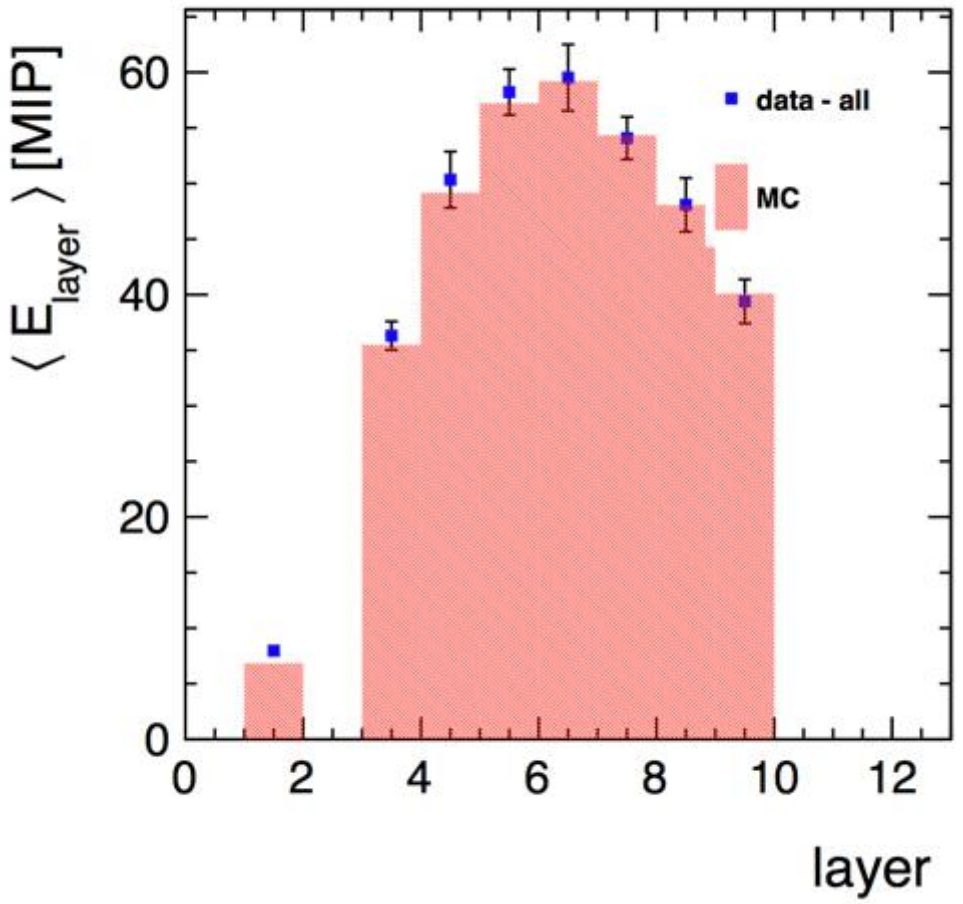

Moliere radius : 24.0 ± 0.6 (stat.) ± 1.5 (syst.) mm

LumiCal test at DESY in 2016

- New LumiCal module design : 750 μm thickness. 1mm between tungsten planes
- Eight modules fully equipped with generic read out (256 channels)
- Two modules were installed without tungsten planes : test of a tracker in front of LumiCal for electron/photon identification
- Six modules formed the LumiCal
- Test at DESY with 1 to 6 GeV electrons. Creation of a $e^-\gamma$ beam

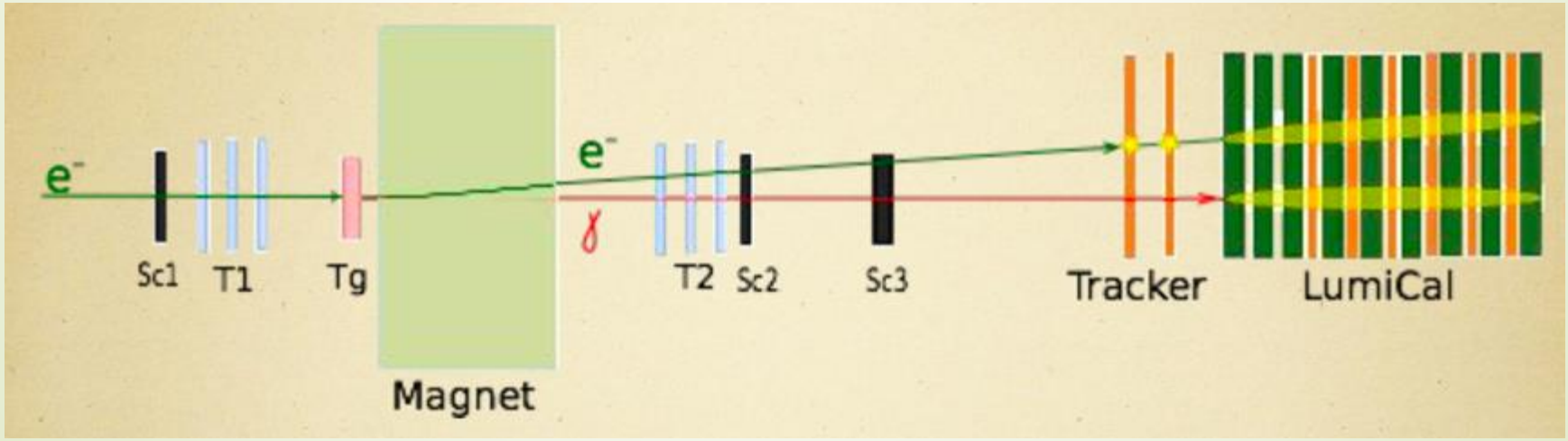

LumiCal in 2016

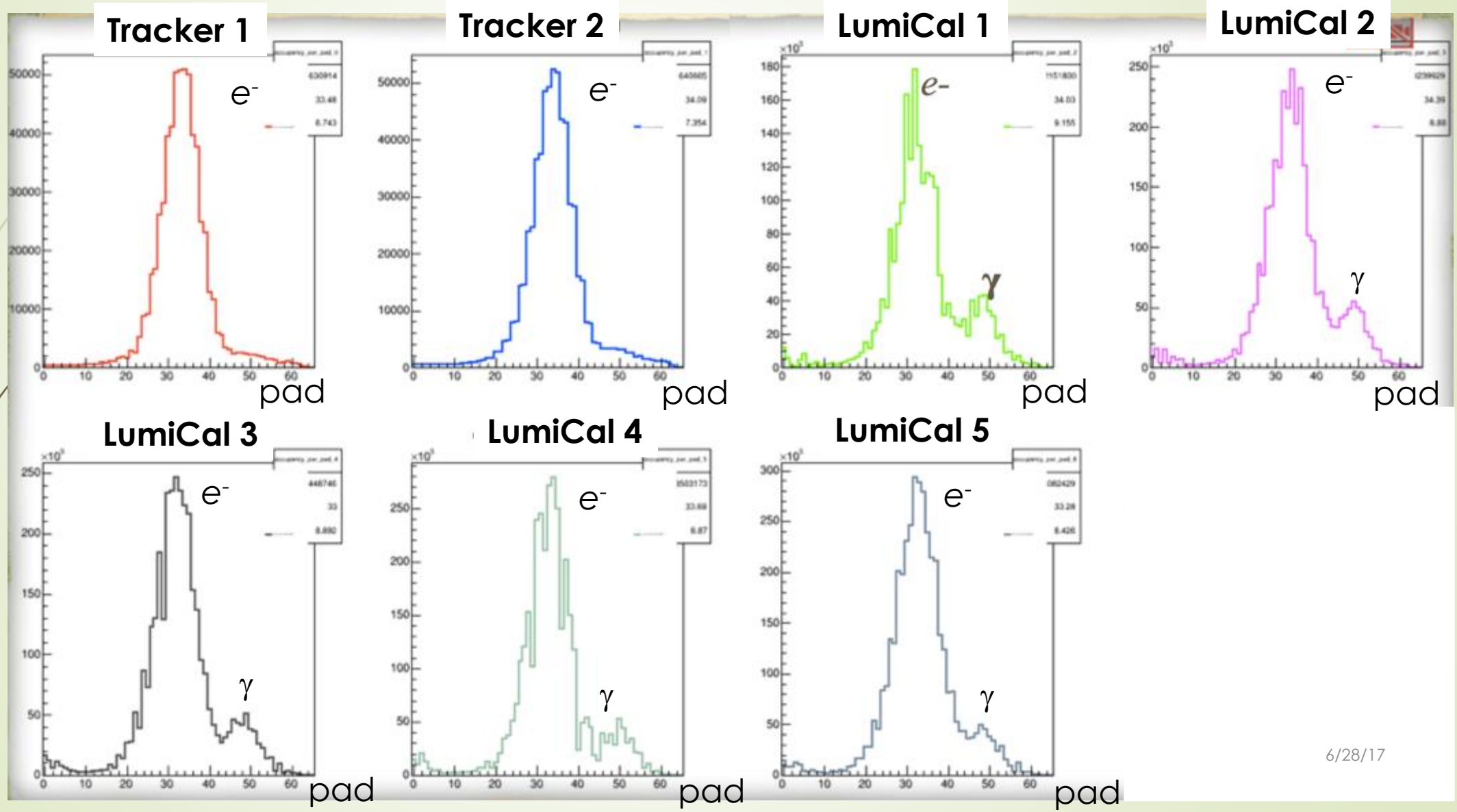

BeamCal test beam

- DESY 2010 :
  - GaAs plate with Al metallization: 500 μm thick
  - 45 deg tiles, segmented into 12 rings, 5x5mm^2 pads
  - S/N ratio and CCE are good: CCE ~33% at 60V, S/N ~19 for all channels.
  - 4 independent pad areas show identical charge collection
- DESY 2013 :
  - Idea to test sapphire sensors parallel to the beam line
  - Perfect electrical properties, excellent radiation hardness, but presently low charge collection efficiency
- 2017 :
  - New design of the detector
  - Aiming to build and test this new model in 2018

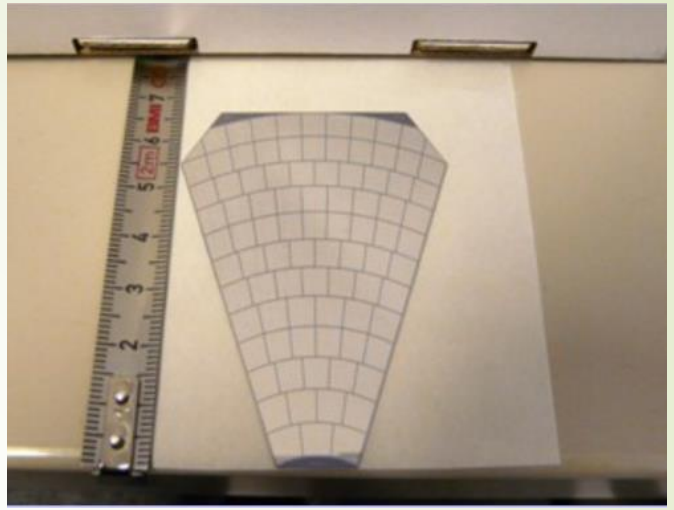

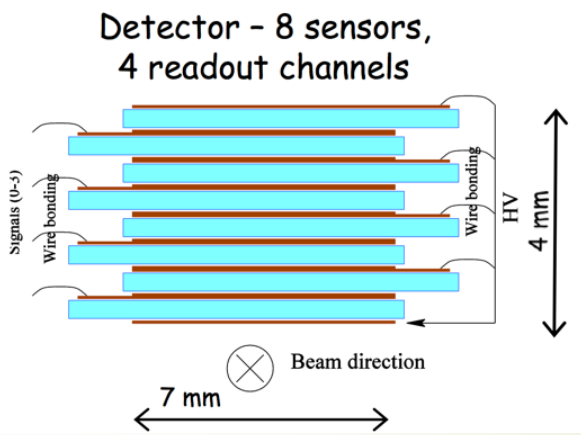

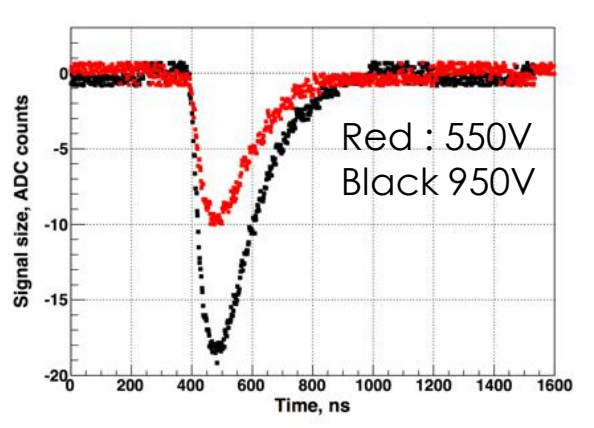

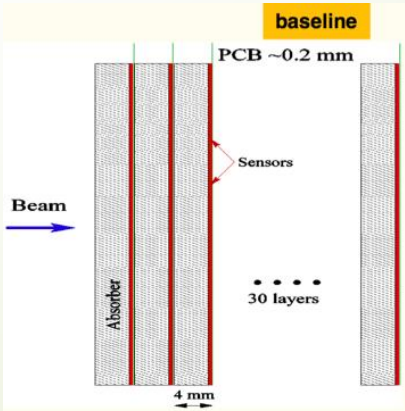

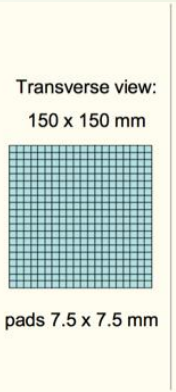

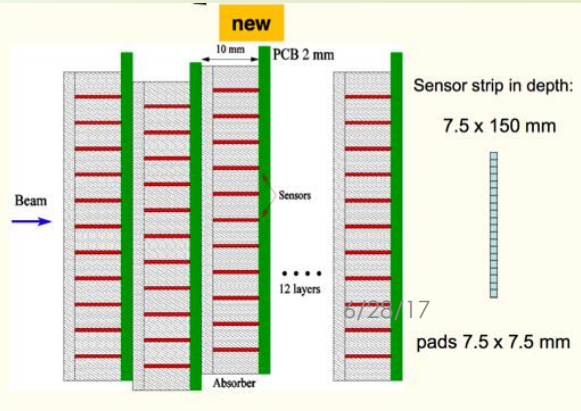

Radiation damage in electromagnetic shower

- BeamCal maximum dose ~100 MRad/yr
- Study is performed at California University of Santa Cruz
- Exposition of Si, GaAs, Sapphire, Silicone carbide

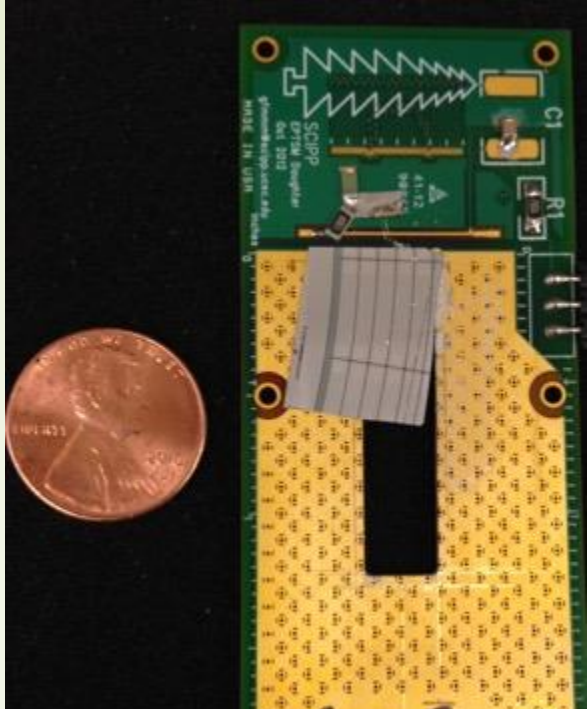

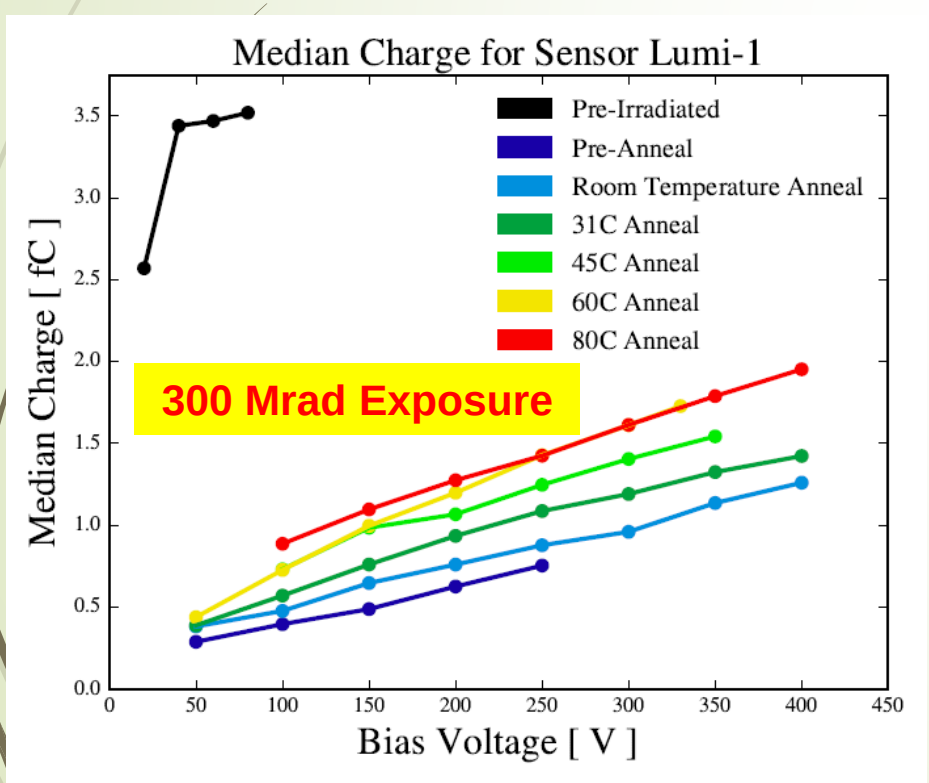

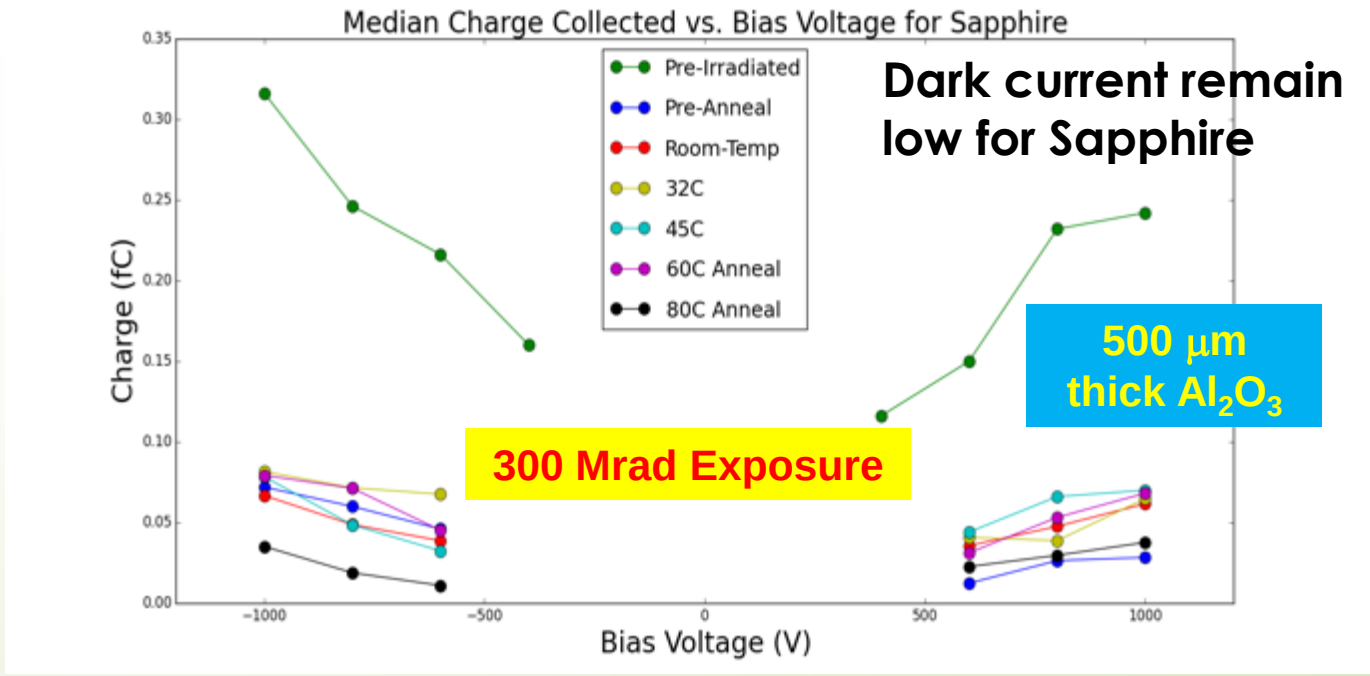

- Simulation
- Hardware
- **Electronics**
- conclusion

LumiCal readout in 2014

- Development of an ASIC for the 2014 test beam
- Charge amplifier shaper with different gain (MIP/electron)
- 8 front end channels
- Development of an 8 channel 10 bit ADC

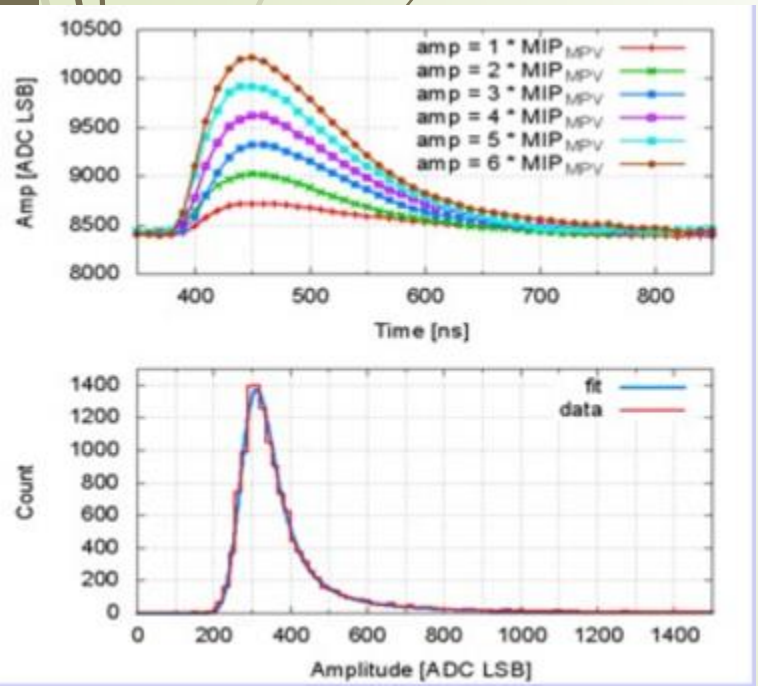

Signal to noise ratio ~19
Cross Talk < 1%

New readout : FLAME

- FLAME: project of 16-channel readout ASIC in CMOS 130nm, front-end&ADC in each channel, fast serialization and data transmission, all functionalities in a single ASIC

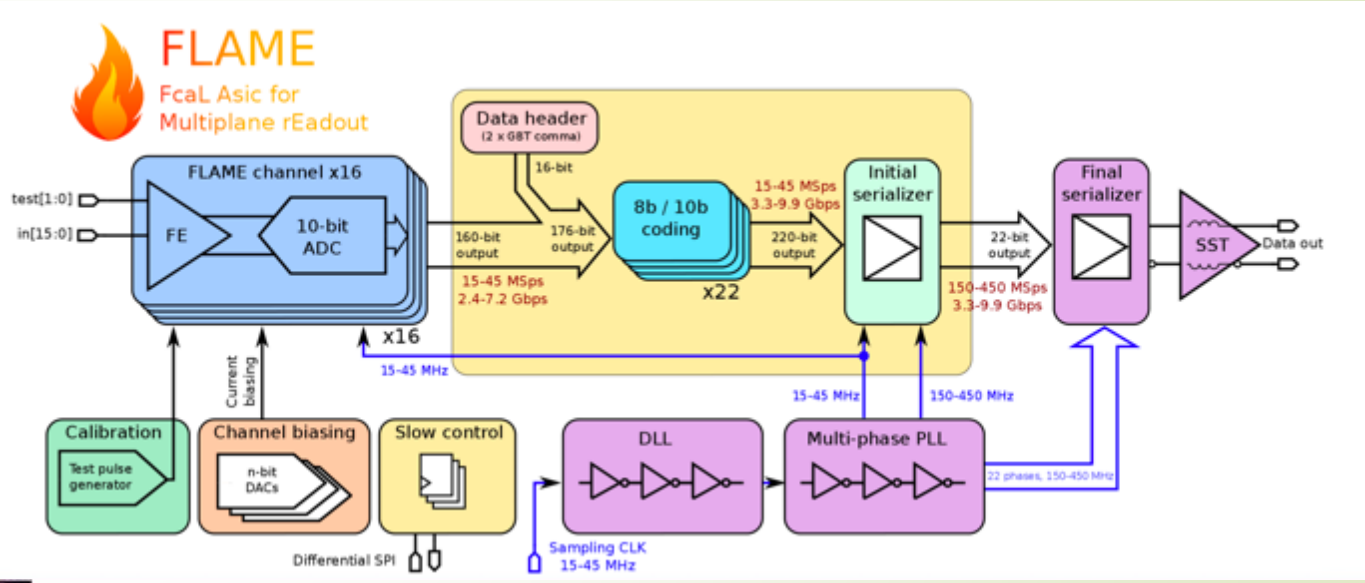

- FLAME prototype :
  - Prototype 8-channel FE+ADC ASIC
  - Prototype serializer ASIC

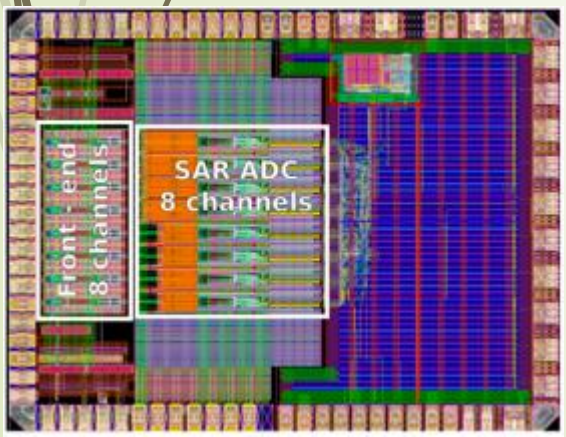

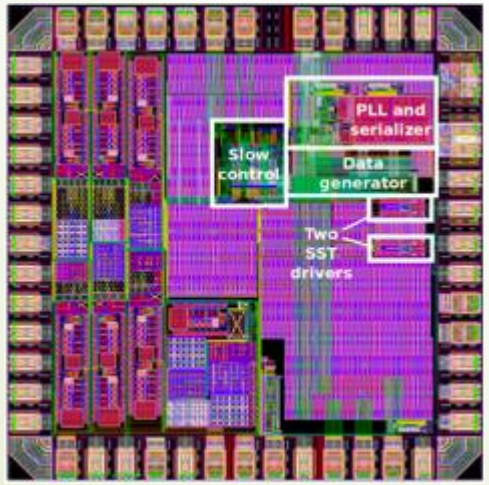

First tests are encouraging : FE ok, ADC ok, basic functionality of serializer are ok

BeamCal readout

- Firstly, BeamCal is hit by beam halo (muons)
  - MIP deposition, low noise electronics
  - Clean environment
  - Good for calibration
- ~25ns later, BeamCal is hit by collision scattering
  - Large deposit energy
  - Physics readout

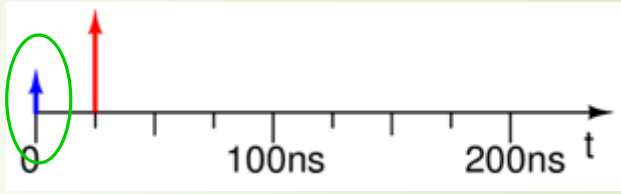

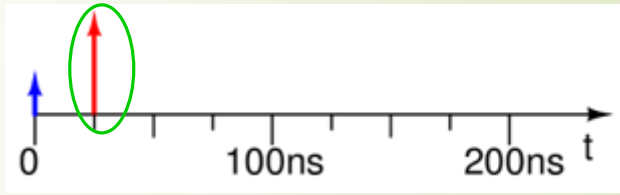

Dual slope integrator for calibration signal

1. Integrate baseline (negative gain)
2. Calibration halo signal is deposited and held
3. Switch to physics mode, process and digitize Vop
4. Then integrate calibration signal and digitize Voc

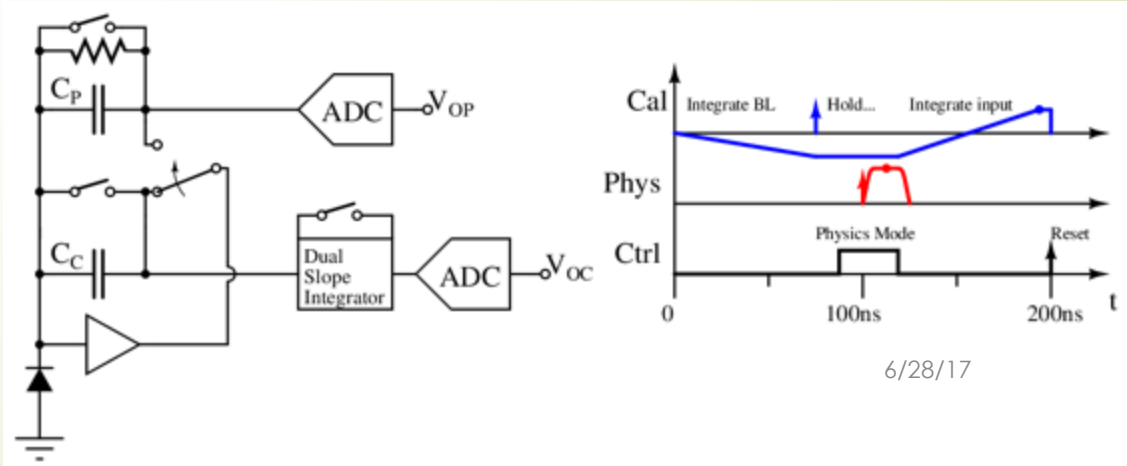

Conclusion

- The precise and complete geometry of the FCAL detectors has been implemented in the mainframe of ILD and CLIC software. Simulations and reconstructions showed that :
  - above 15 mrad, the BeamCal high electron reconstruction efficiency is close to 100%
  - Very good energy resolution and luminosity measurements with the LumiCal (stochastic term ~0.2)
  - Tungsten seems to be the best candidate for the LHCal
- A ultra compact LumiCal, including a tracker allowing electron/photon identification has been tested and the preliminary results look encouraging
- GaAs BeamCal gave relatively good charge collection efficiency and a new sapphire based prototype in under study
- LumiCal prototypes of key blocks readout fabricated and first promising results obtained. BeamCal readout chip is under intensive study