E-JADE is a Marie Sklodowska-Curie Research and Innovation Staff Exchange (RISE) action, funded by the EU under Horizon2020

E-JADE

Beam Pipe, Cables, Services

Karsten Buesser

ILD Software and Technical Meeting

Lyon
26.04.2017

Paths for Cables and Services

- DBD (2013)

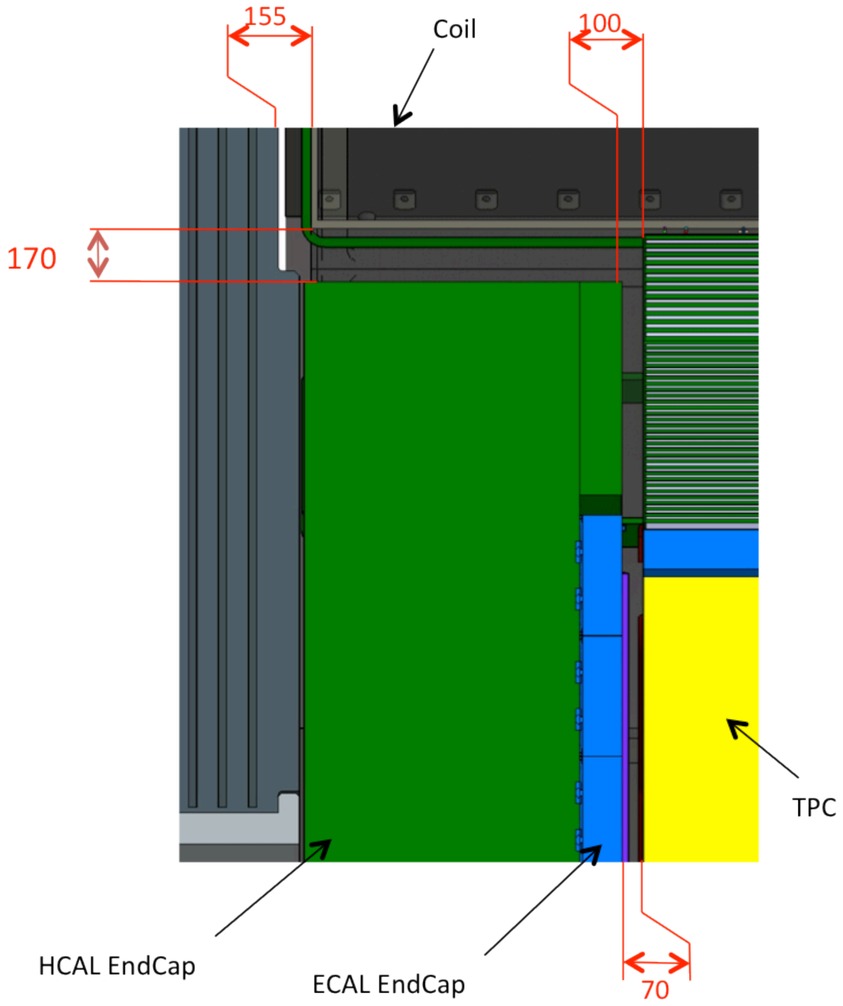

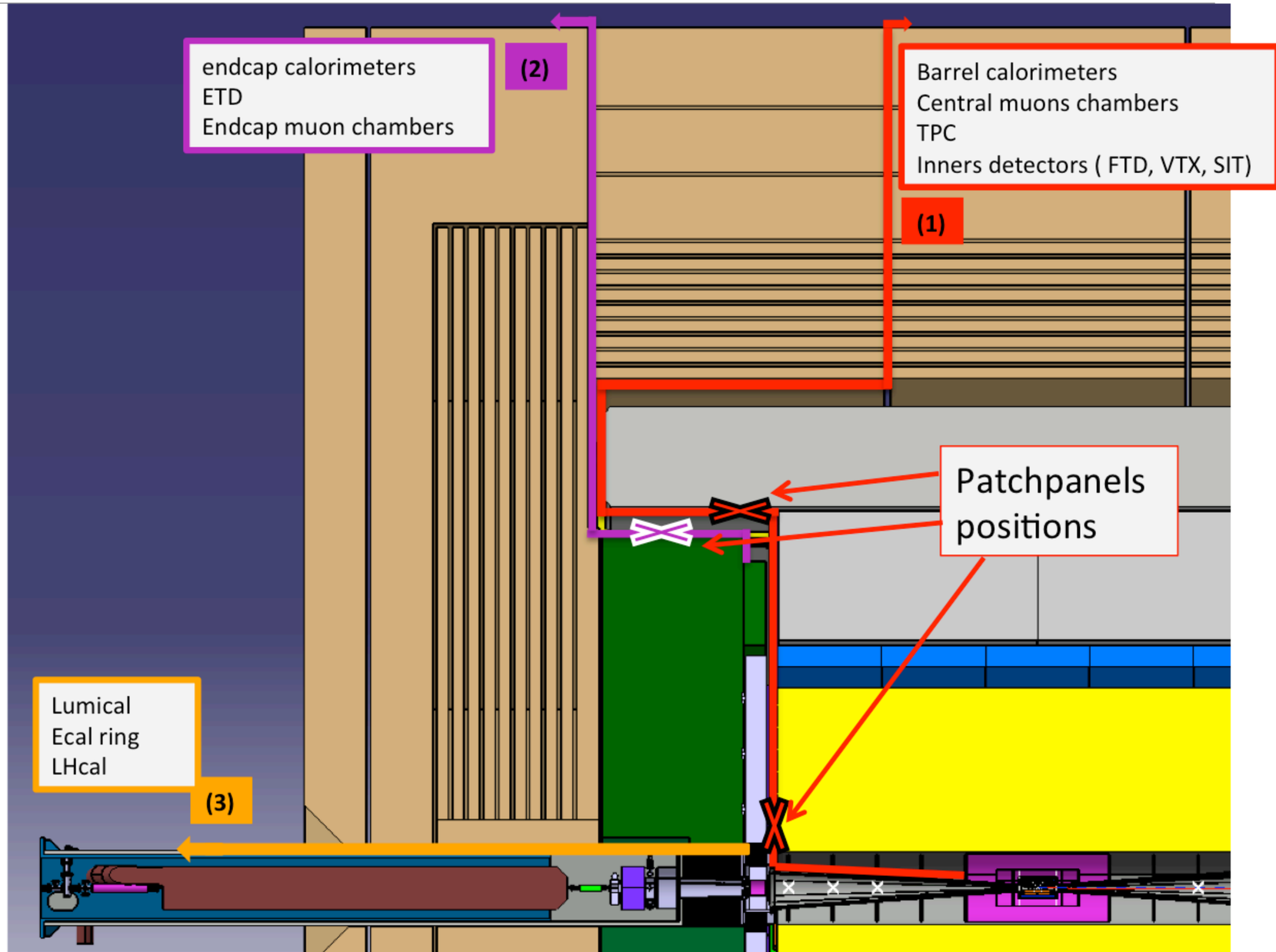

Paths for Cables and Services

- DBD (2013)

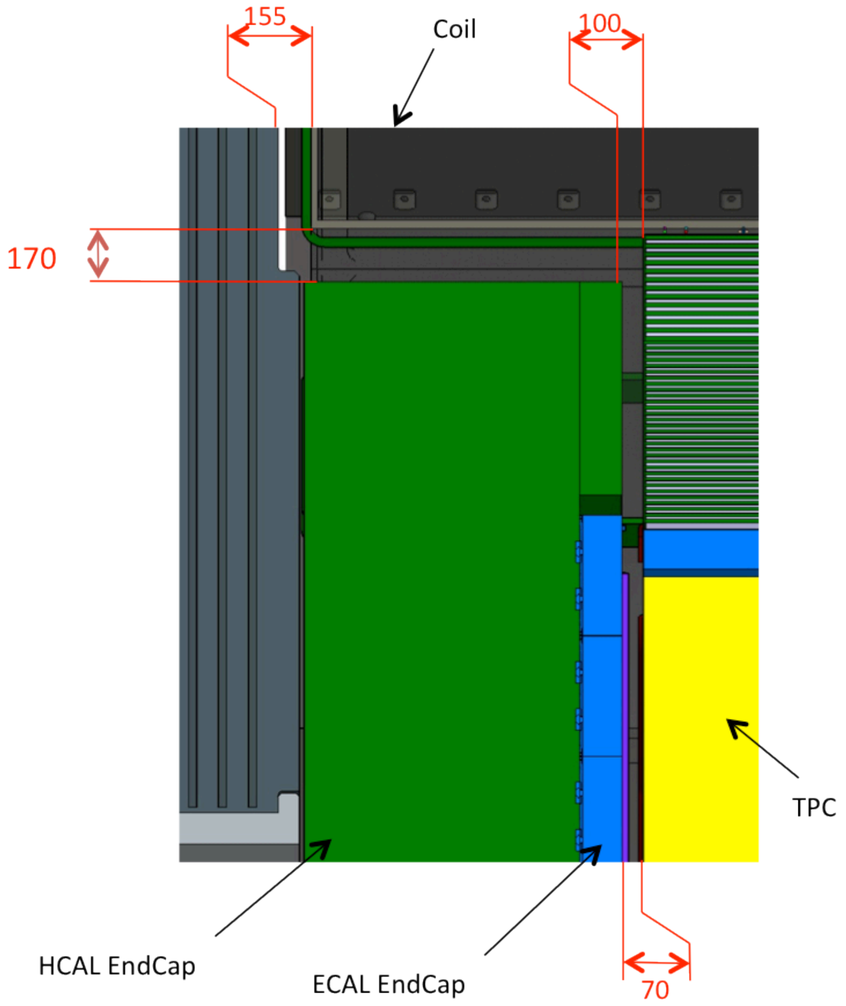

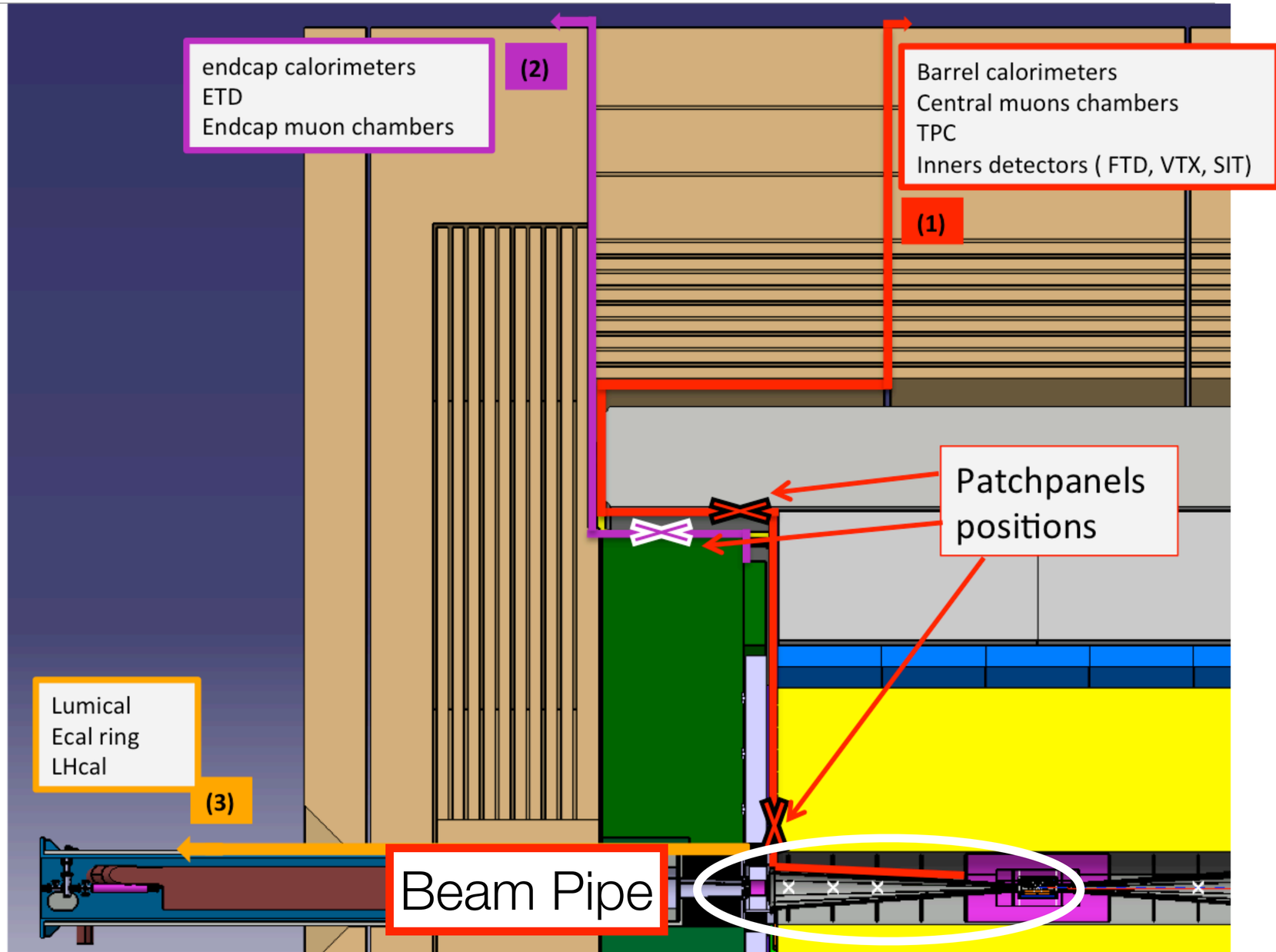

Paths for Cables and Services

- DBD (2013)

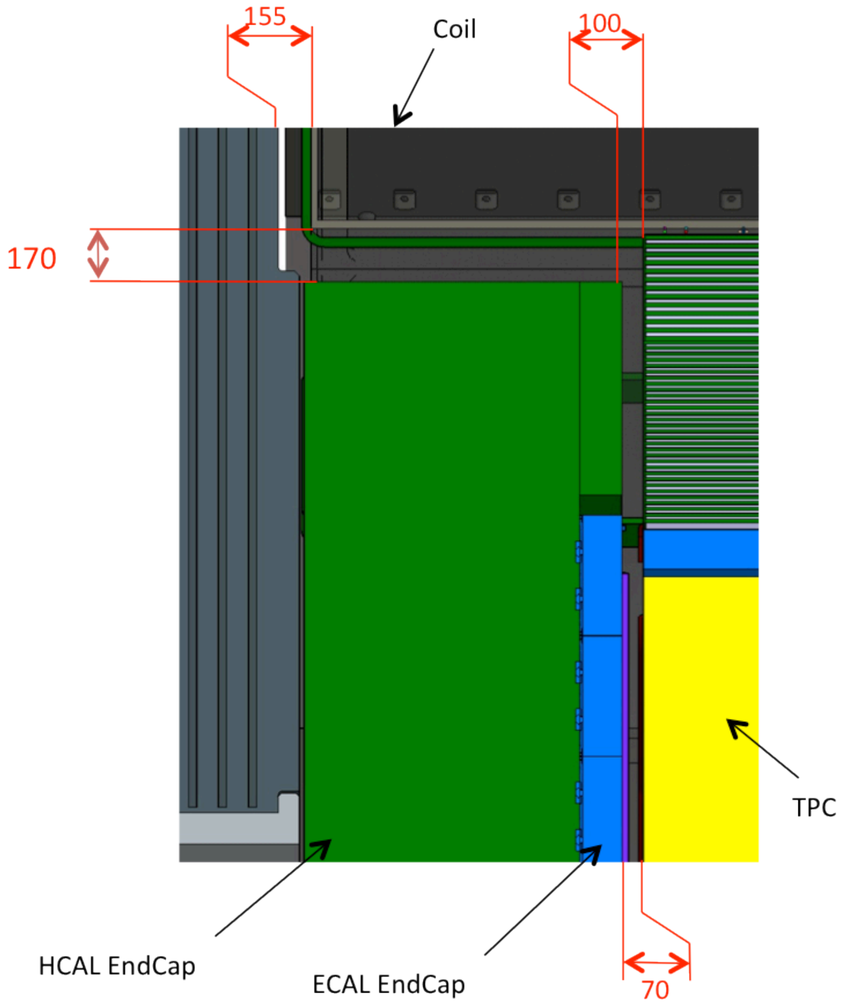

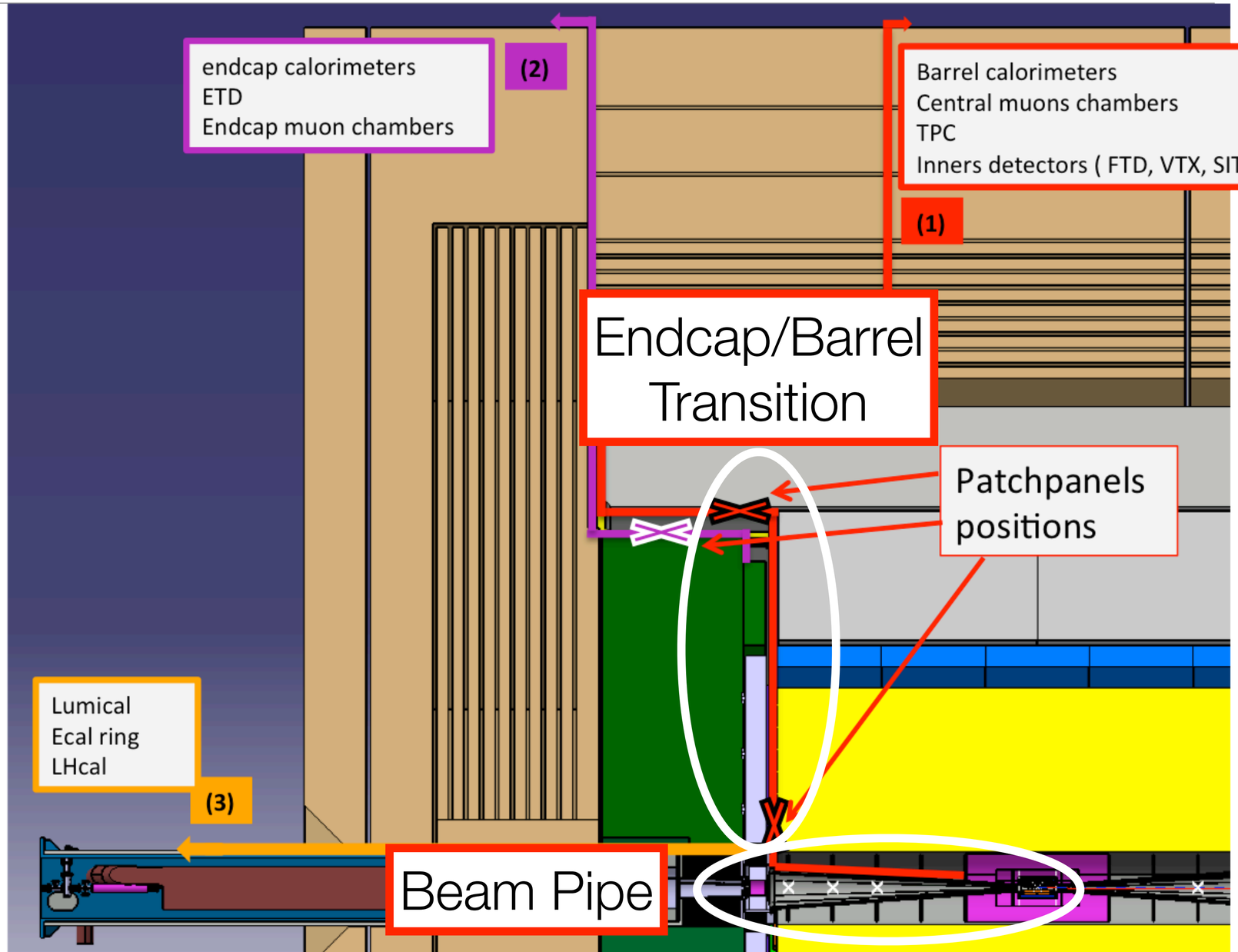

Caveat

- All existing work has been done for the LoI and the DBD
  - mostly at LLR (C. Clerc)
- Assumptions about requirements for cables and services (cooling) depend on information about sub-detector electronics that was available at that time
- For some sub-detectors (e.g. SIT) no information was available at all

- This work needs to be re-viewed
  - major piece of work…

Beam Pipe Region

Beam Pipe Description in LoI/DBD

- Studies done at LLR/LAL and KEK in 2009
  - Note from Anduze et al. (D*1156425) and Suetsugu (D*1156475)

The design of the beam tube obeys few constraints:

1. It does not interfere with the luminosity.
2. Its central part is small enough to optimise the measurement of the impact parameter and large enough not to interfere with the background.
3. It complies with a crossing angle of 7 mrad.
4. It is as light as possible to reduce photon conversion and hadron interactions, withstanding nevertheless the atmospheric pressure.
5. It has not to induce electromagnetic perturbations generating heat.
6. It has to be pumped down to an agreed upon level.

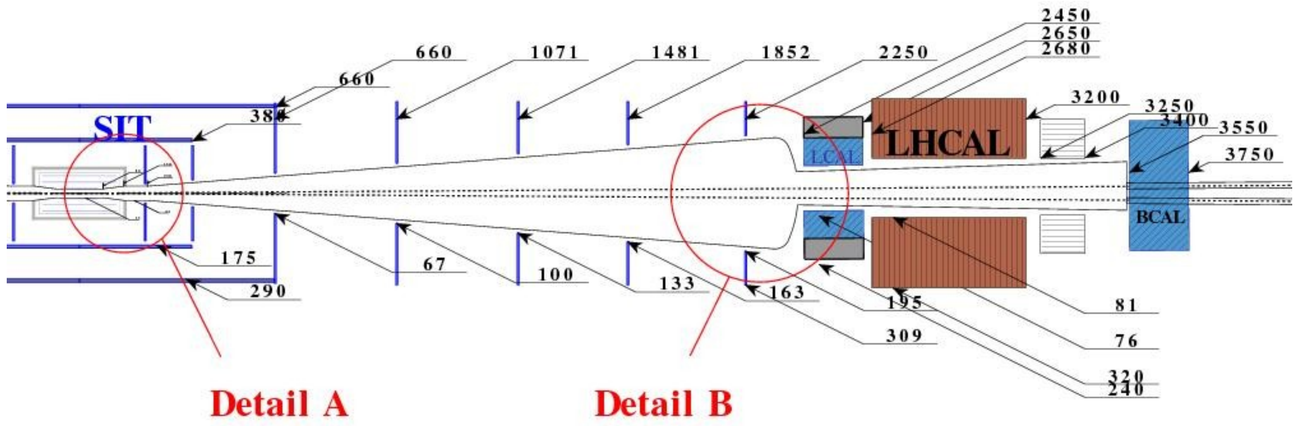

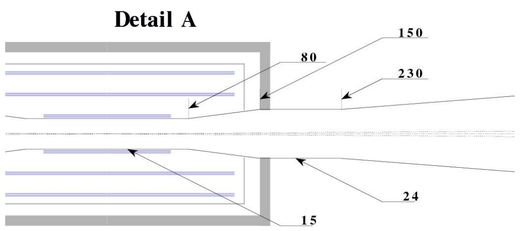

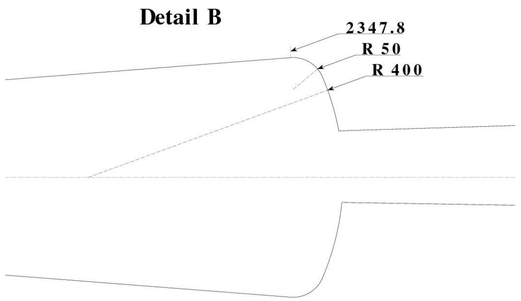

Mechanical Behaviour in Vacuum

- 2mm Be (left) in the large cone, just stable enough to hold the vacuum.
- More advanced tapered design, 0.85 - 1.5mm, with re-inforcement rings (right).
  - Chosen for LoI/DBD.

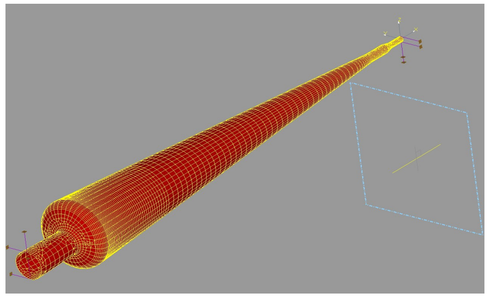

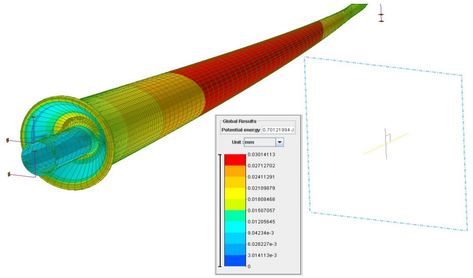

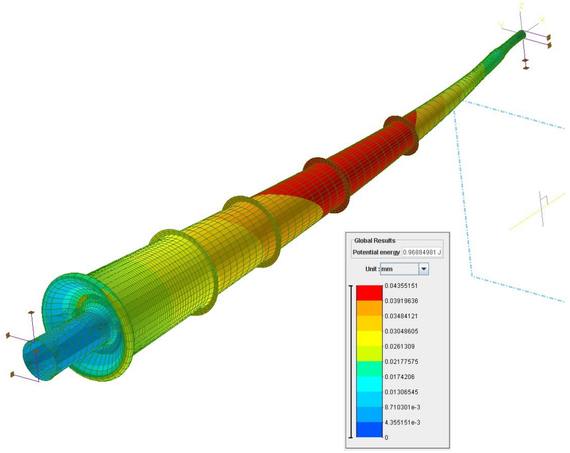

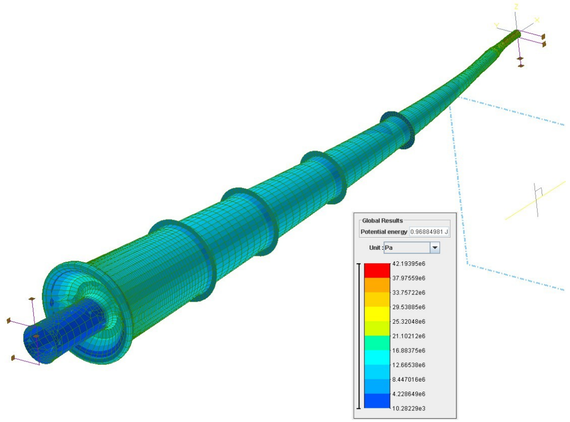

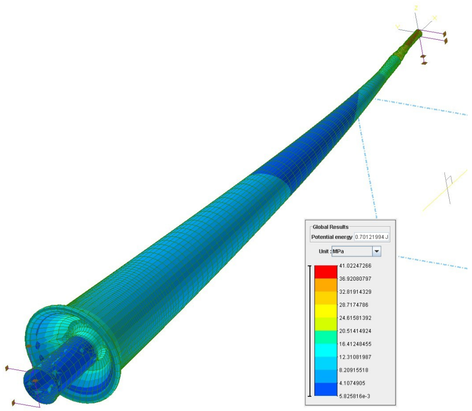

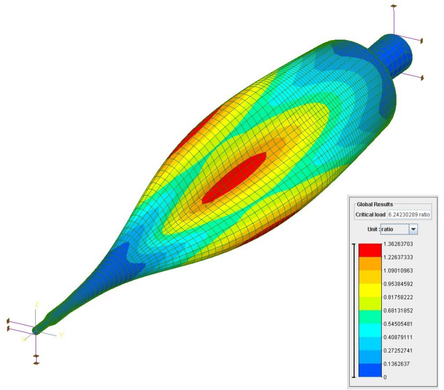

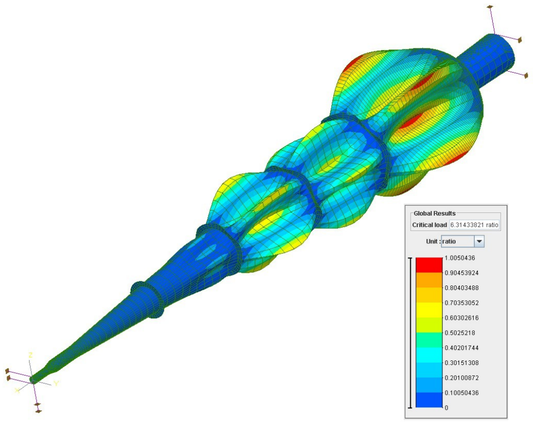

Cables Along Beam Pipe

Inner detectors (6) : X0 along the beam pipe

C. Clerc, M. Joré
2011

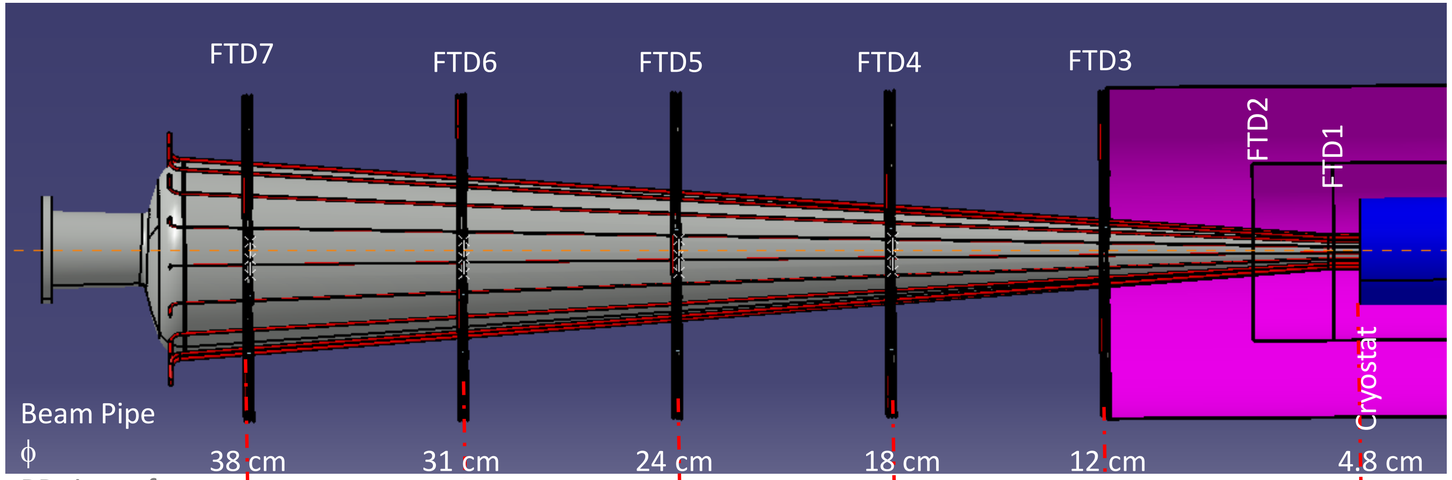

5 FTD + VXD	4 FTD + VXD	3 FTD + VXD	2FTD + VXD	1FTD + VXD	VTX : CMOS 85 mm² or FPCCD : 65mm²
875 mm² Cu eq to 0,73mm 5.1% X0	717 mm² Cu eq to 0,74 mm 5.2% X0	559 mm² Cu eq to 0,74 mm 5.2% X0	401 mm² Cu eq to 0,71mm 5.% X0	243 mm² Cu eq to 0,64mm Cu 4,5% X0	CMOS:4% X0 FPCCD:2.9% X0

So, with actual data : about 5% of X0 all along the beam pipe.

That means also

- *about 9 kg of material on each side*
- *a minimum gap between FTD supports and beam pipe of 2 cm for path of all the cables….*

And SIT/ FTD1&2 services not included…

Cables Along Beam Pipe (Status 2011)

Inner detectors (6) : X0 along the beam pipe

C. Clerc, M. Joré
2011

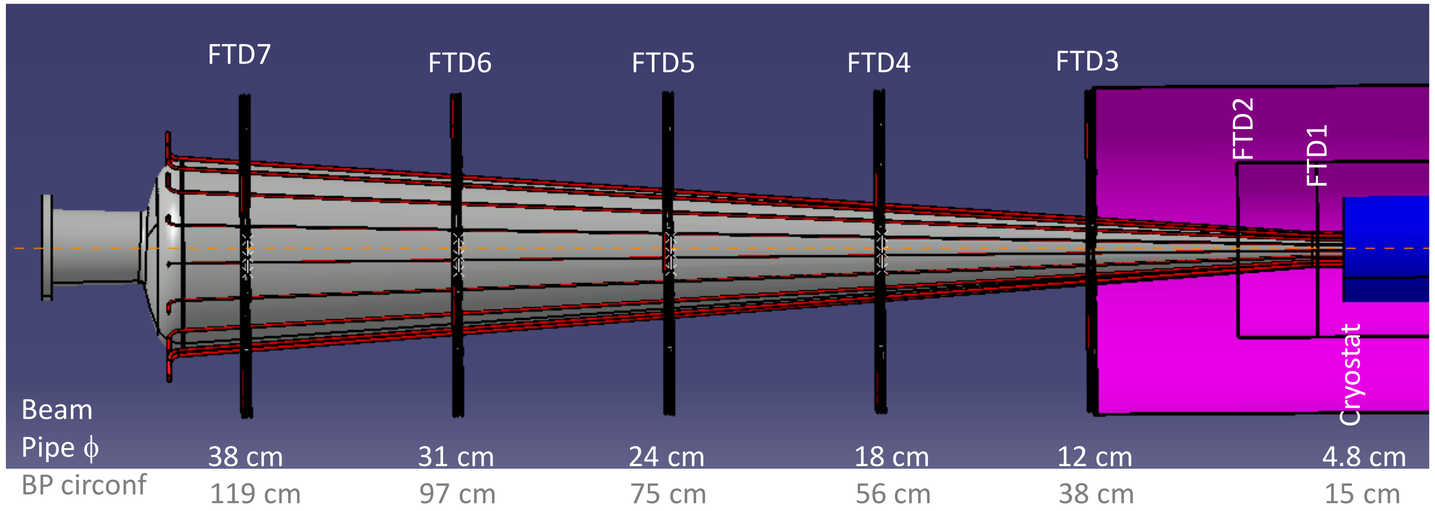

BUT (again):
SIT = 6,9 m² versus FTD (µstrips)= 4,8 m²
FTD 1&2 =0,67 m² per side versus VTX = 0,17 m² per side

We need to gain more than factor 2 !

Conductor (Cu >>> Al ?)
+
Optimisation of the power distribution
Study of the heating of the beam pipe

SIT Cables

- Very preliminary studies done in 2012 (C. Clerc)
- Probably best routed along the inner field cage of the TPC
- No estimates about material yet
  - maybe extrapolate from FTD…

SIT, two solutions

1. Along the beampipe : they have to run on backside of FTD2 and 3 , then :
   - huge amount of material around BP
   - Material in front of the other FTD

2. Run along the inner radius of TPC

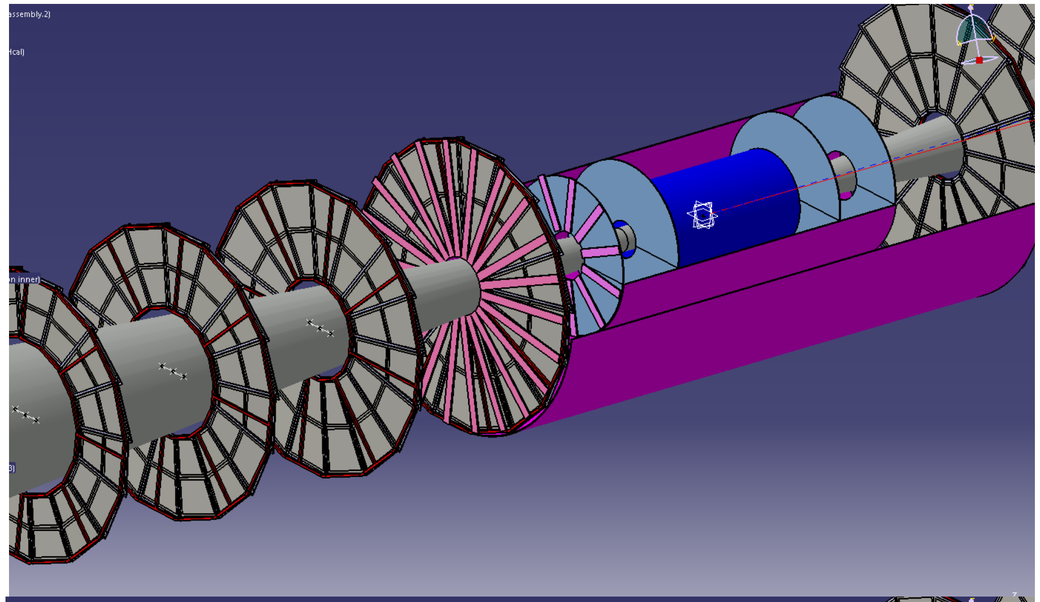

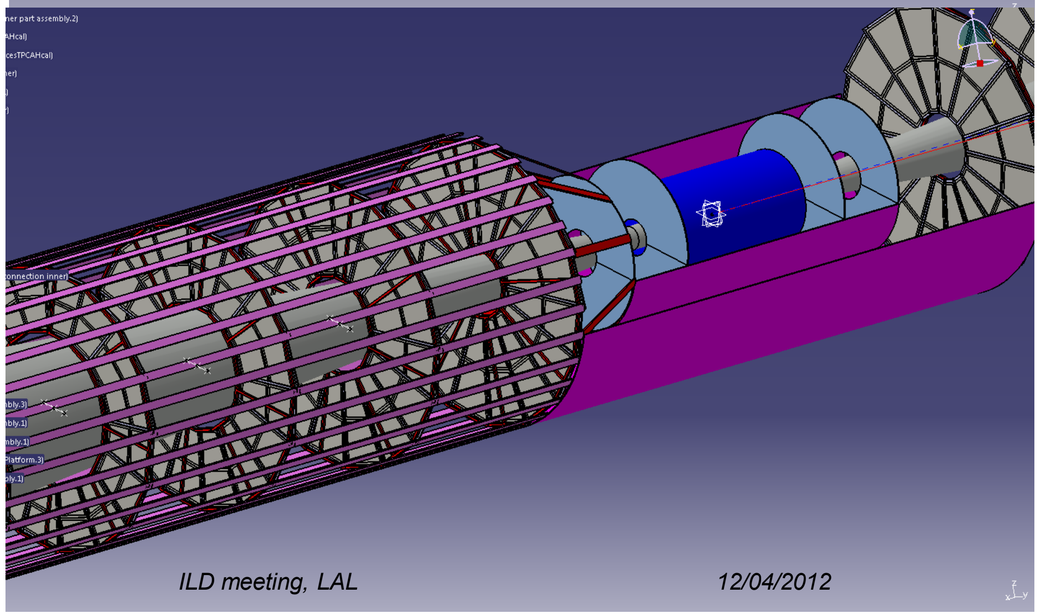

Vertex Detector

Inner detectors (4) : vertex

C. Clerc, M. Joré
2011

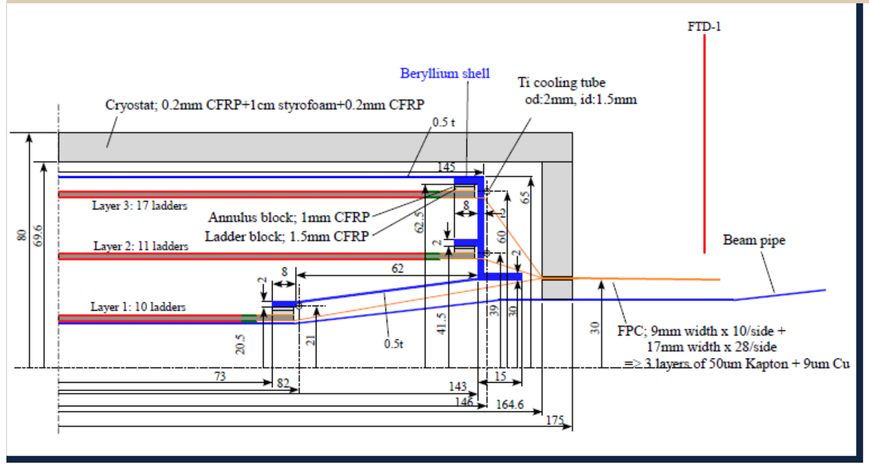

FCPPD (from Y.Sugimoto)

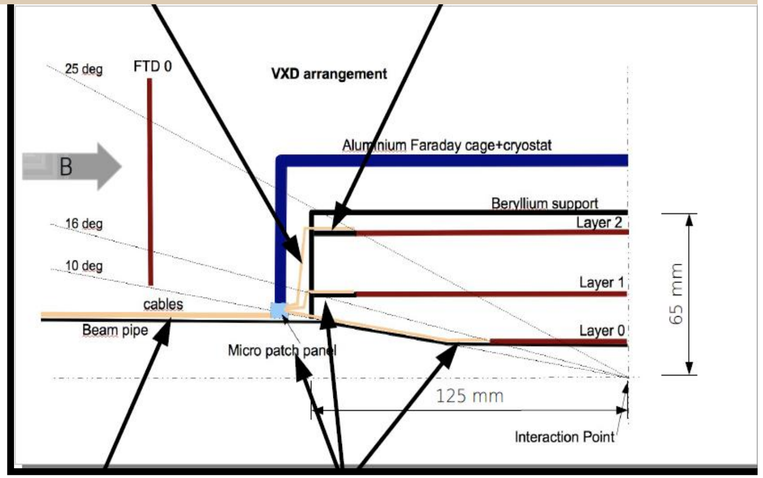

CMOS(from J.Baudot)

The 2 designs are considered to be compatible for simulation in the inner part of the cryostat,
But as **FPCCD** not pulse :

CO2 cooling foreseen , Titanium tube 2mm o.d. and 1.5mm i.d
+ **junction box** between the 2 first FTD

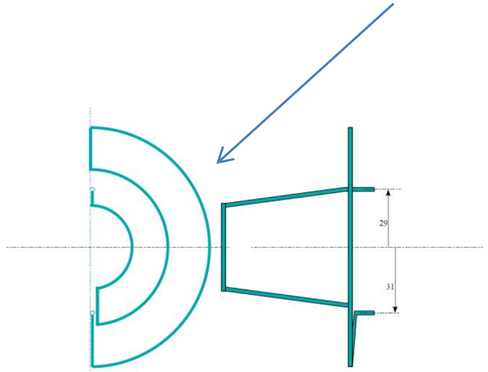

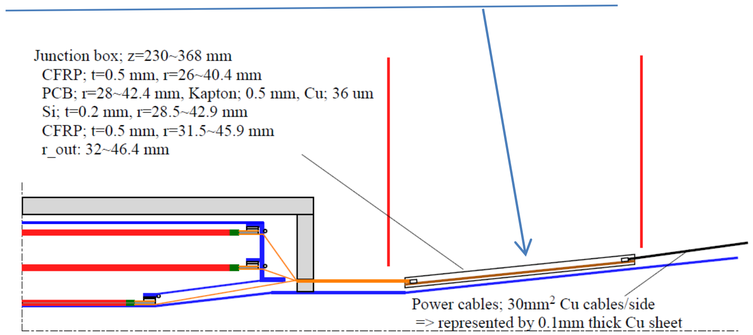

Old Simulation Configuration (transferred from MOKKA)

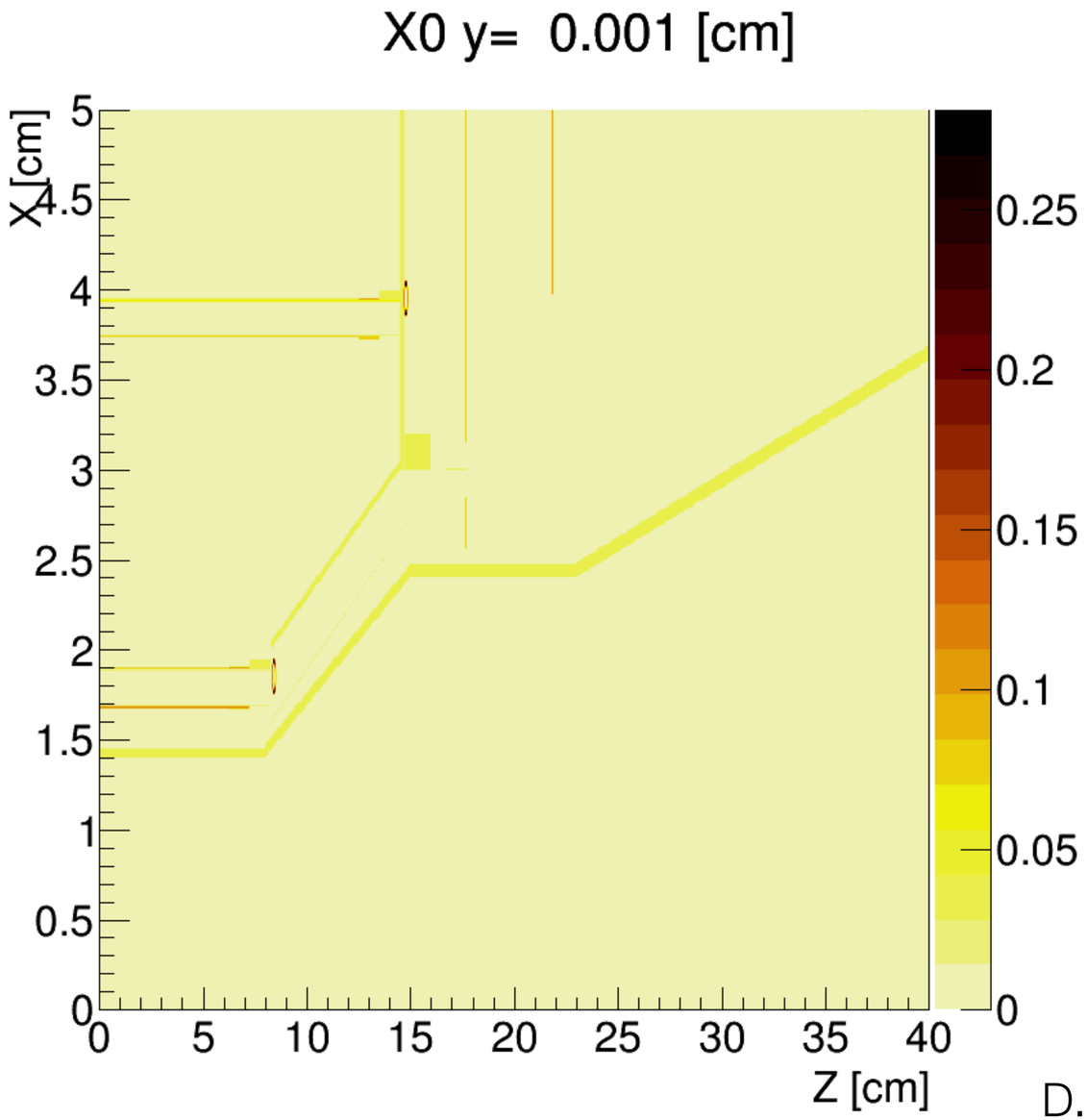

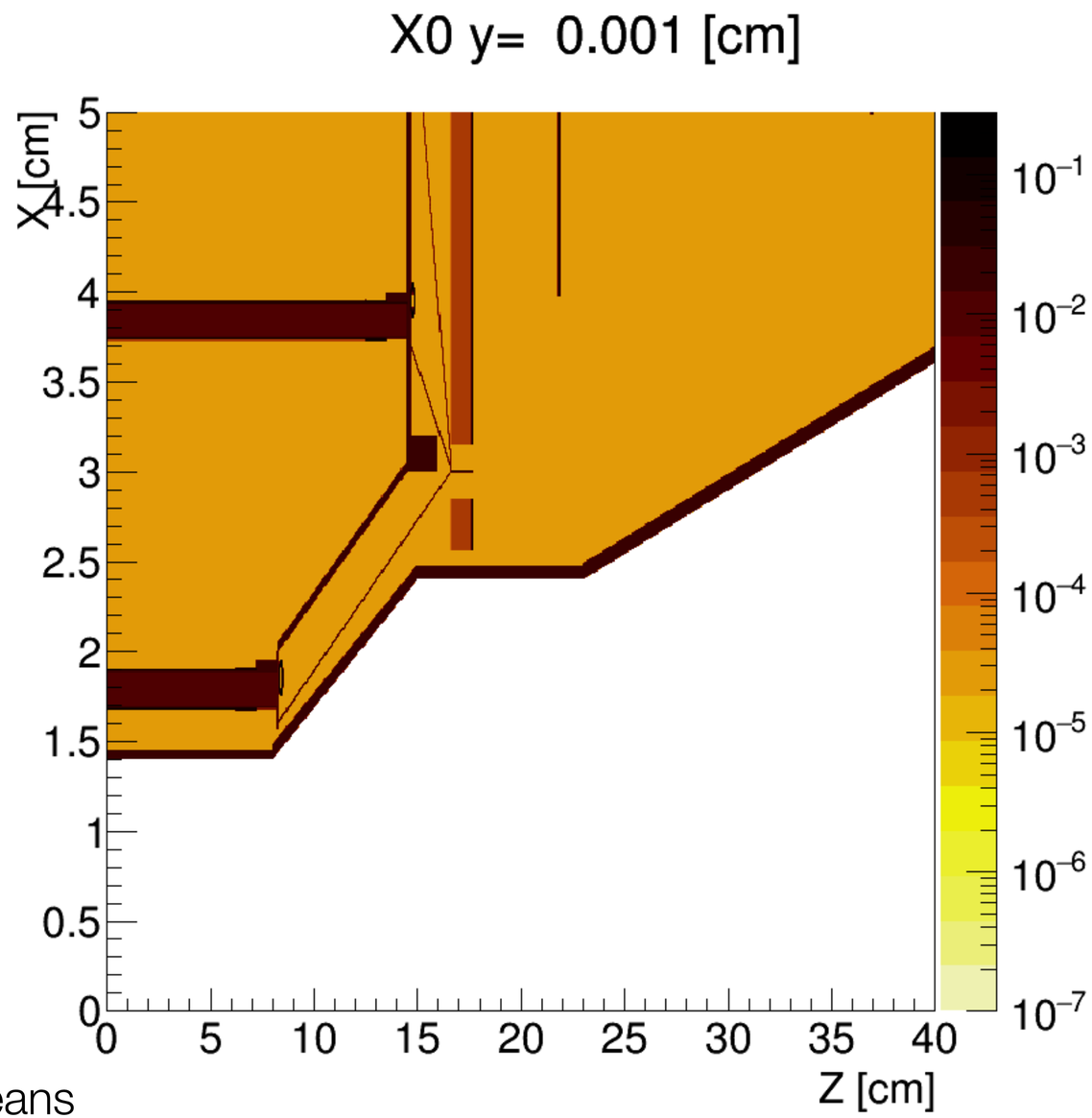

D. Jeans

Old Simulation Configuration (transferred from MOKKA)

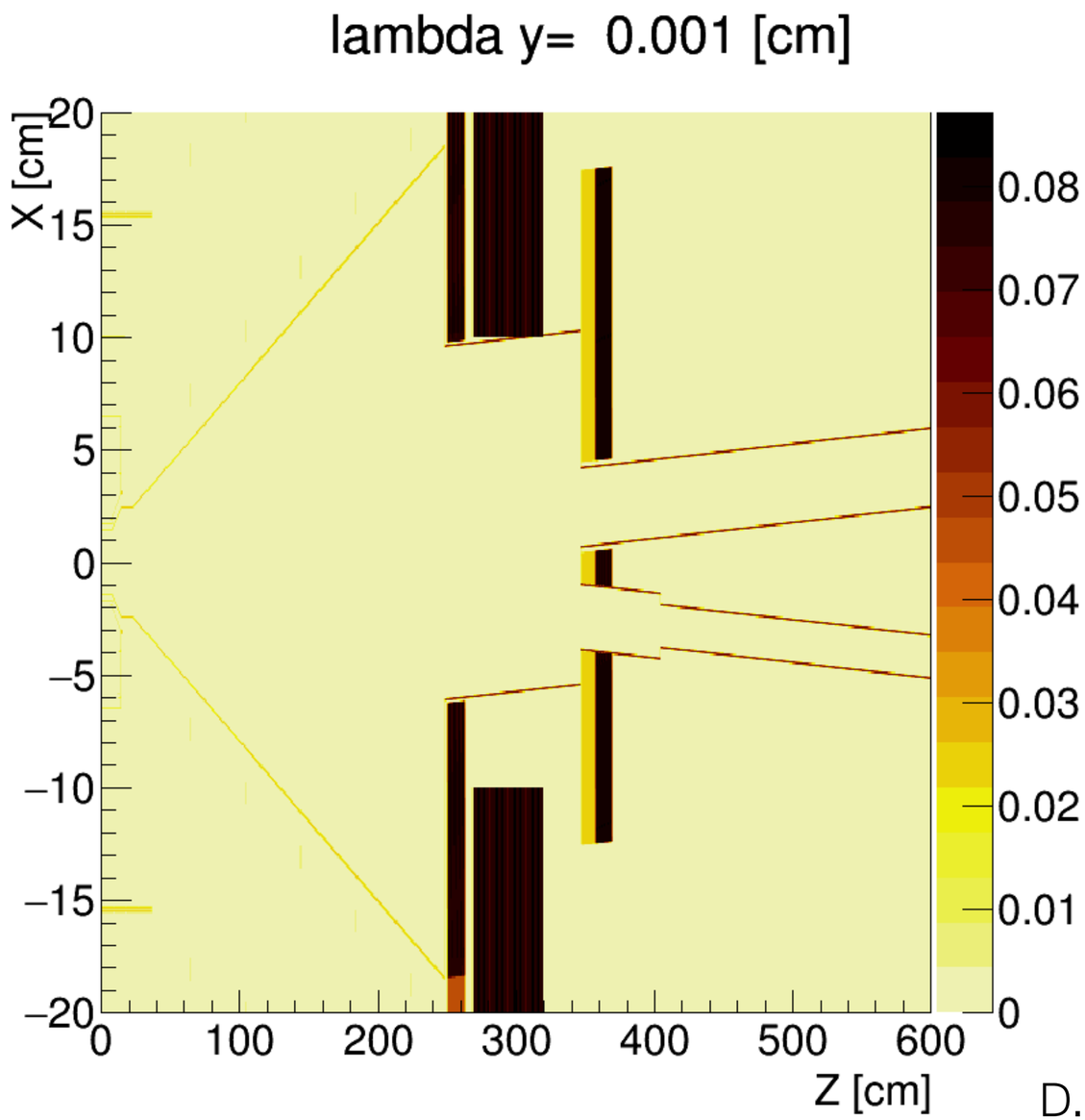

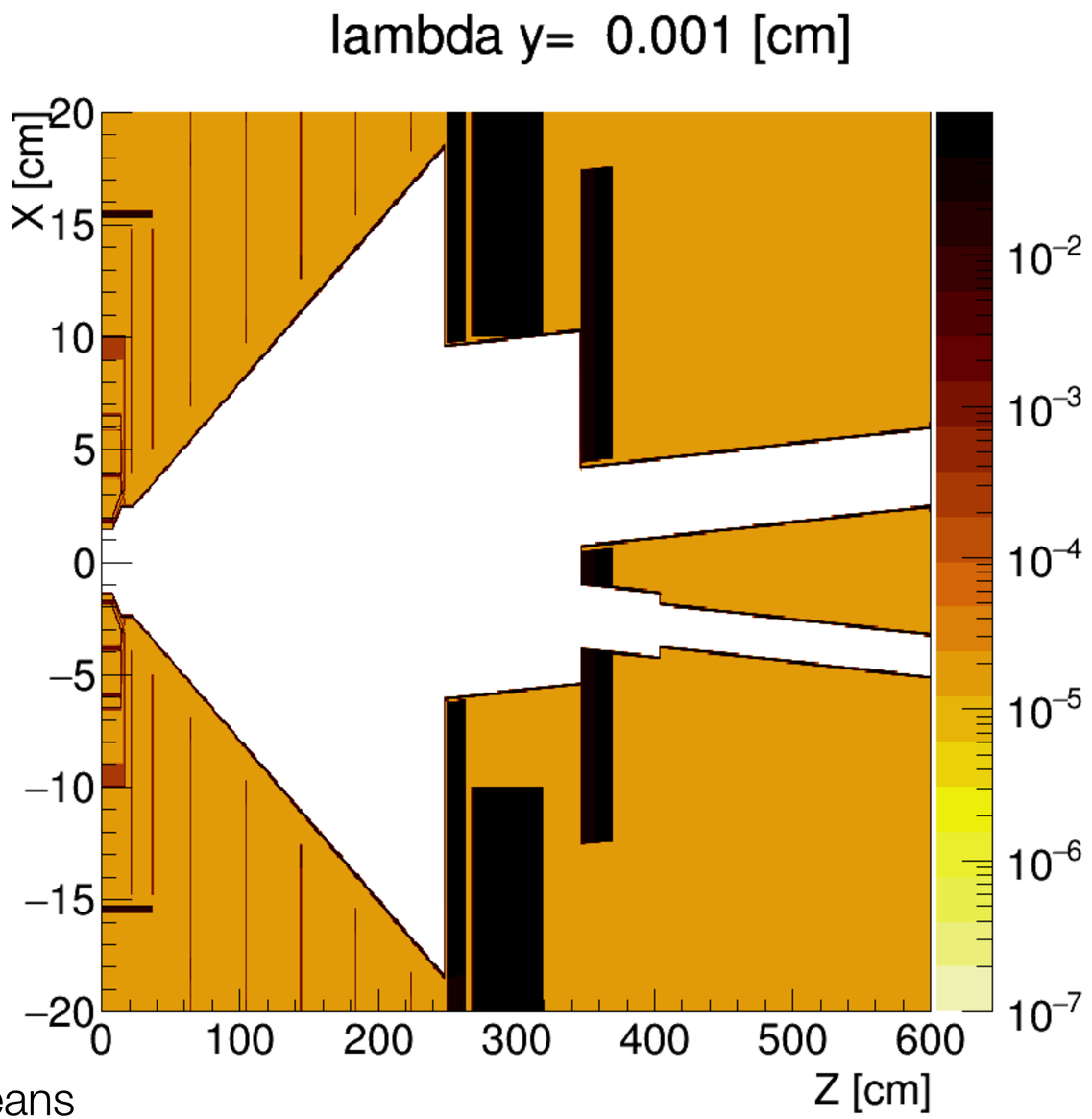

D. Jeans

New Design

- Re-inforcement rings were not in the DBD simulation
- No need to go to aggressive design with reduced thickness if material for cables needs to be added
- Agreed on:
  - Radii and positions unchanged
  - Thickness of 2mm (Be) in large cone
  - Add 0.7mm Cu for cables around large cone
- Implemented by Daniel Jeans in DD4HEP description of ILD

Old vs New (Daniel Jeans)

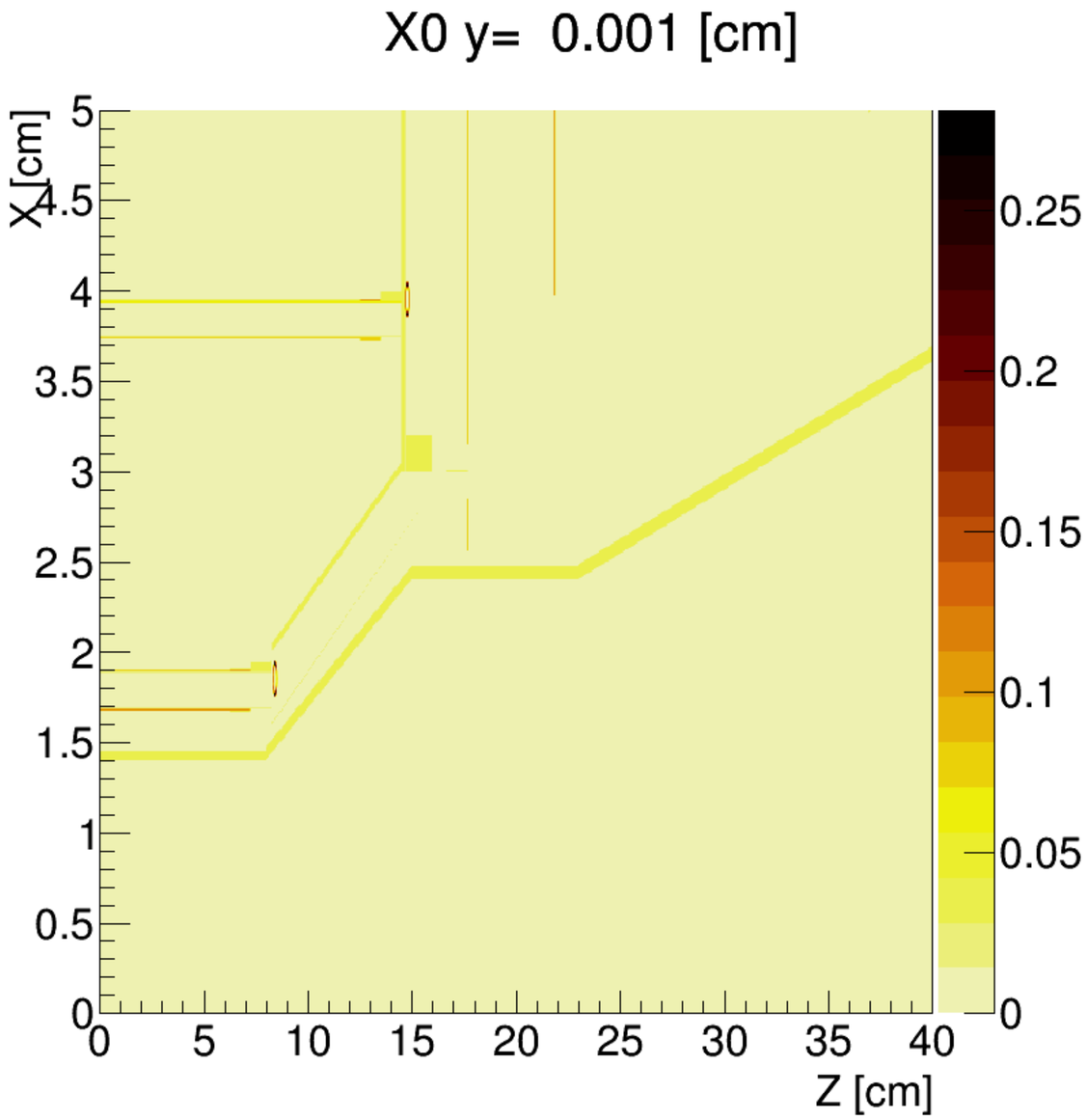

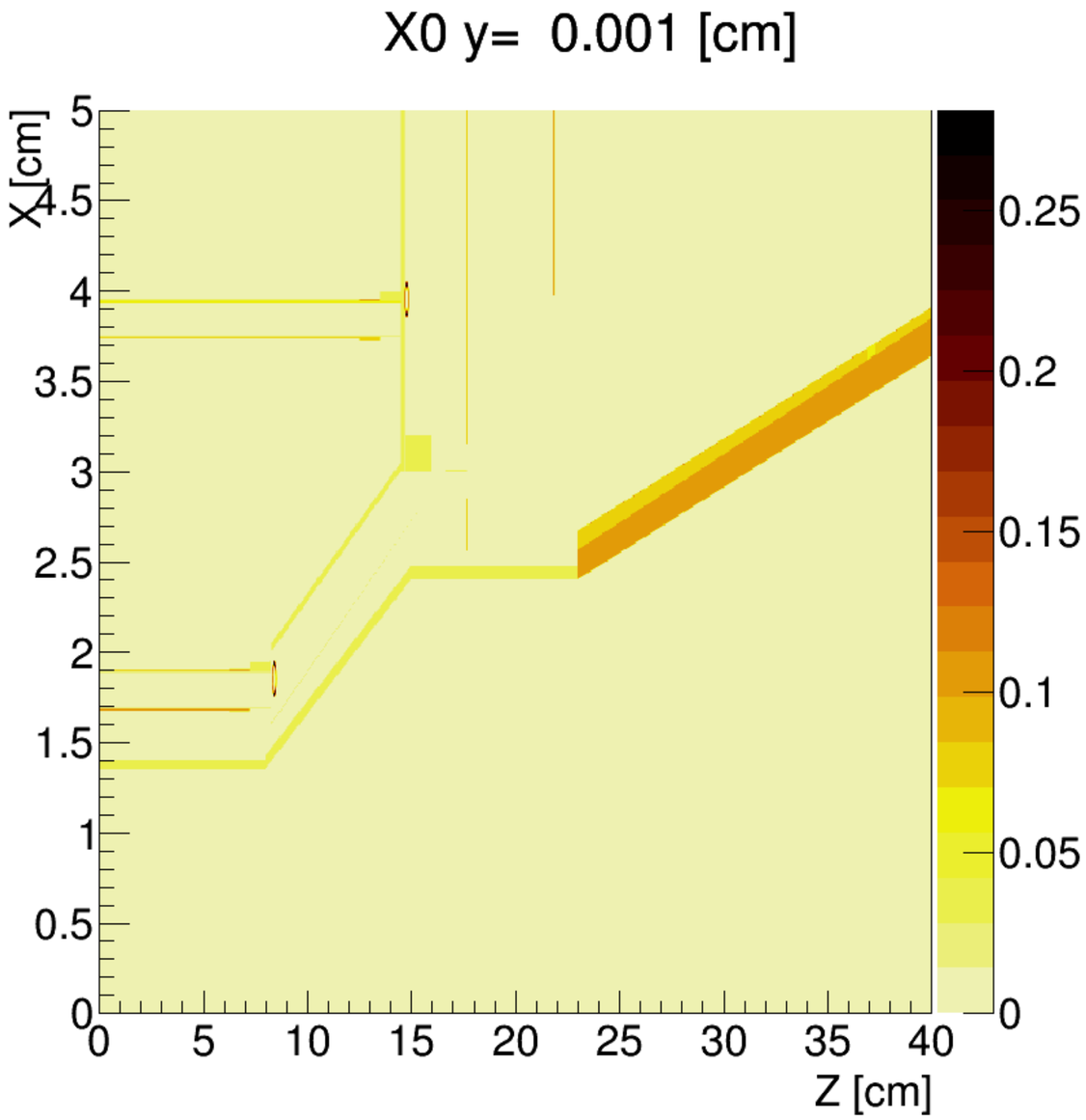

Old vs New (Daniel Jeans)

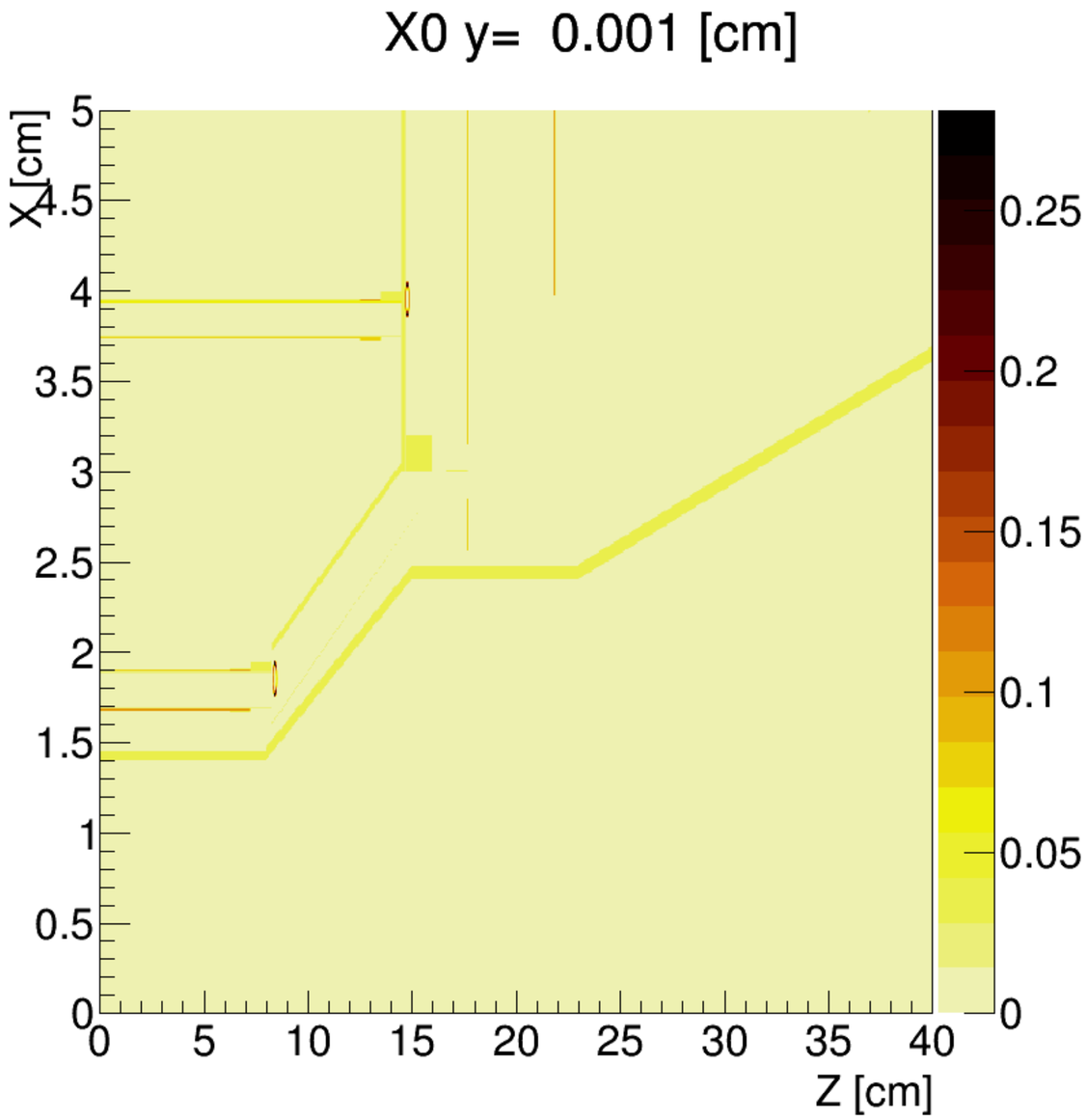

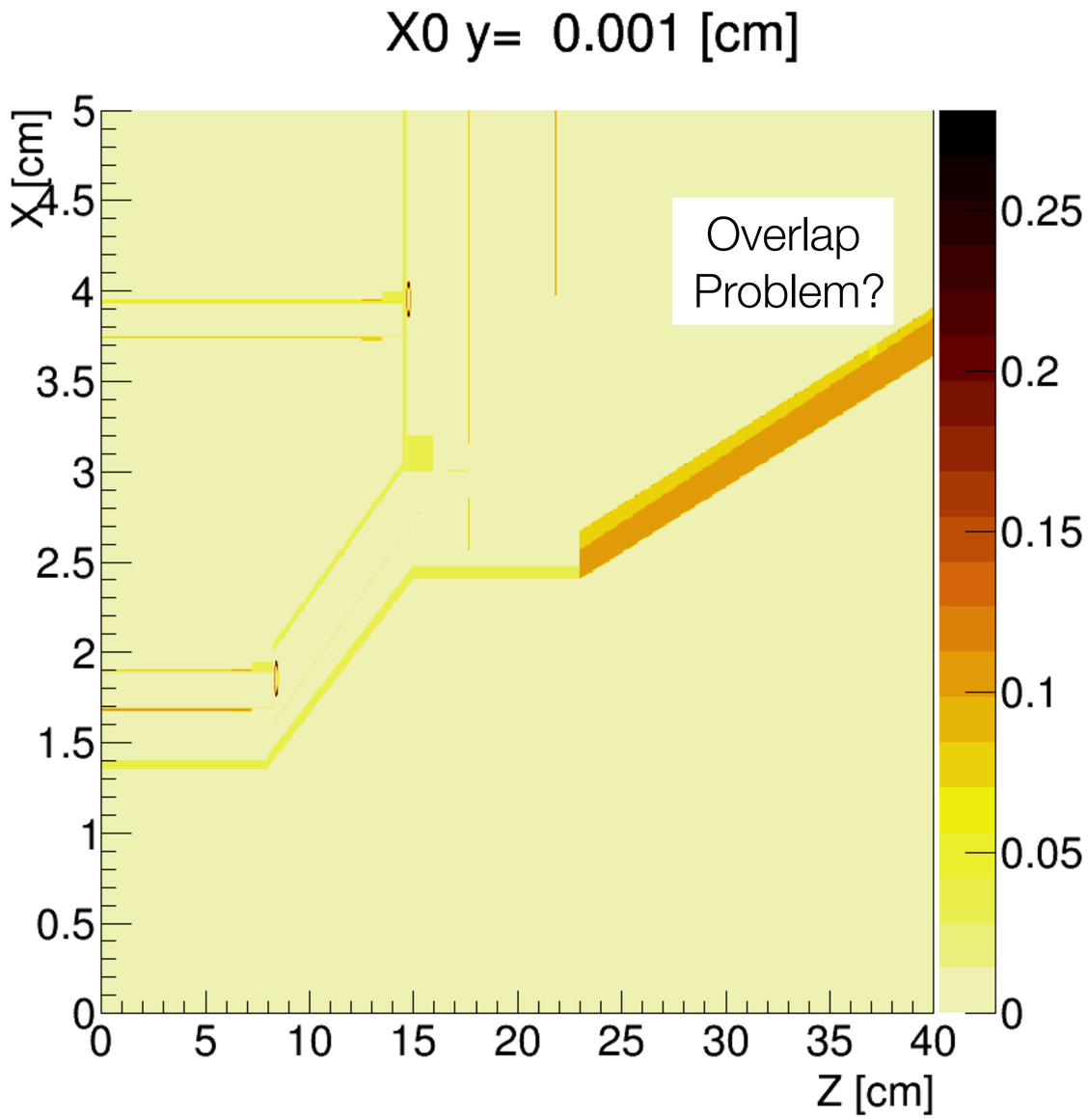

Old vs New (Daniel Jeans)

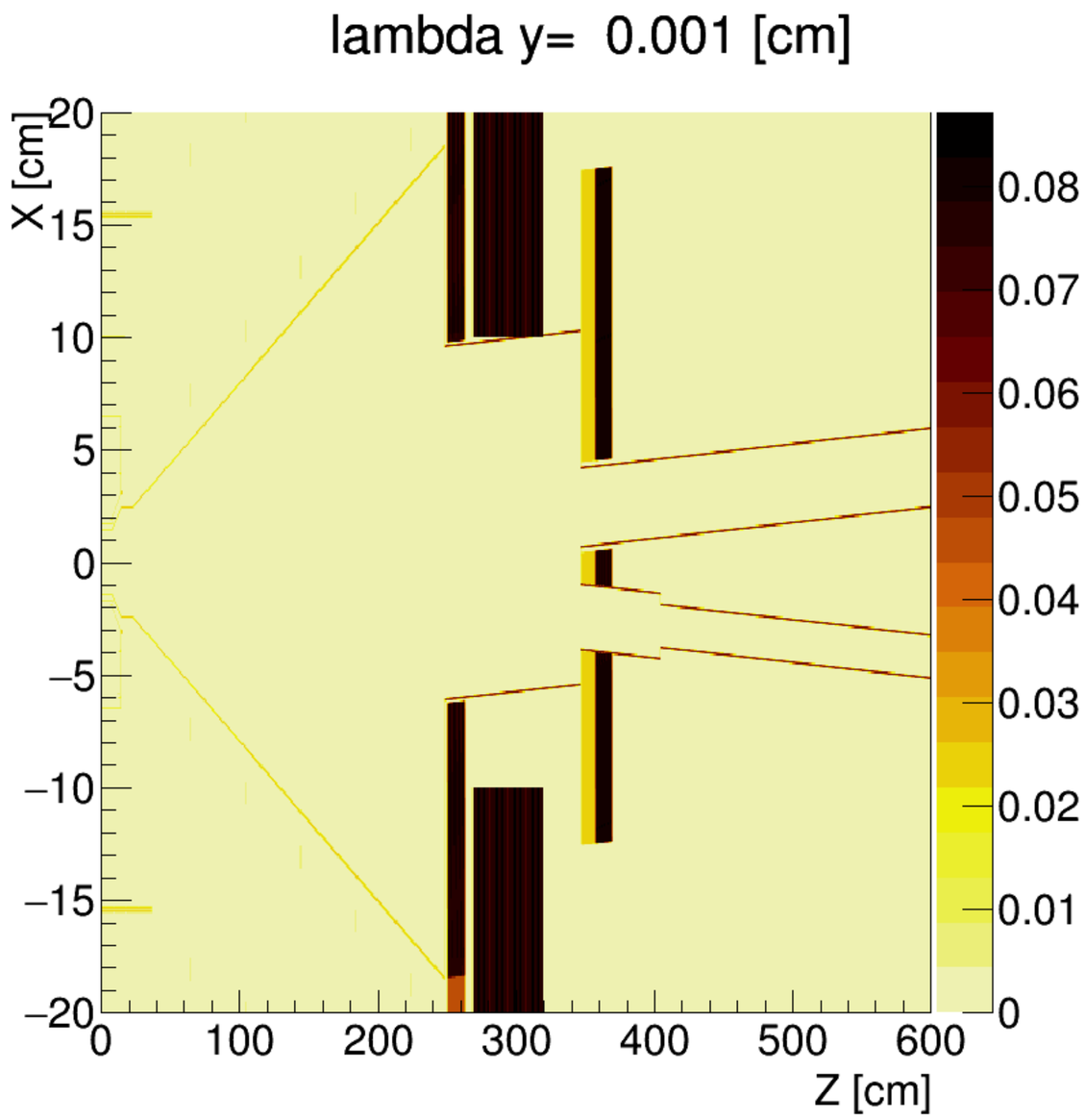

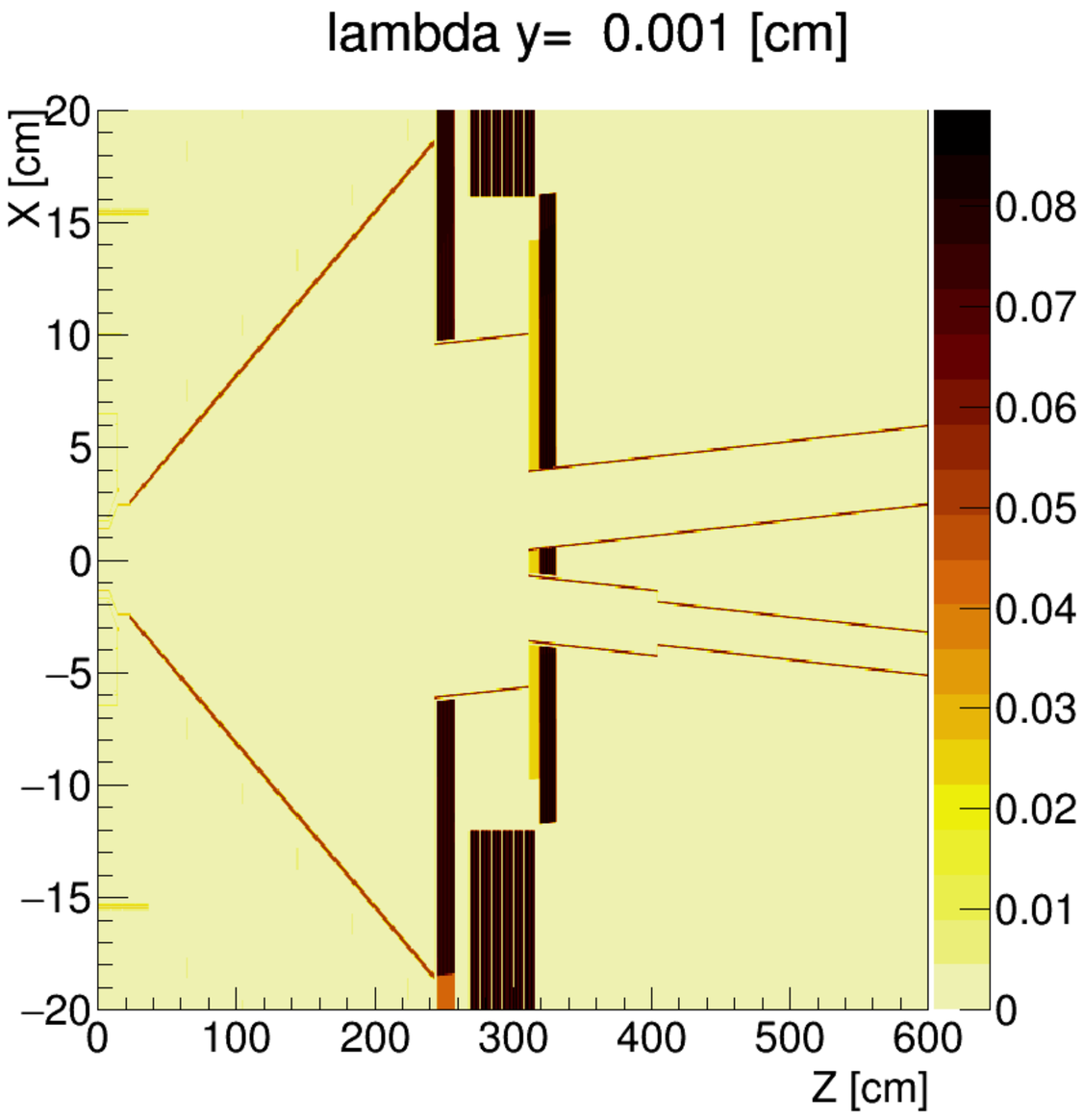

Barrel/Endcap Transition Region

Location of Patch Panels

- Connection of Inner Detector

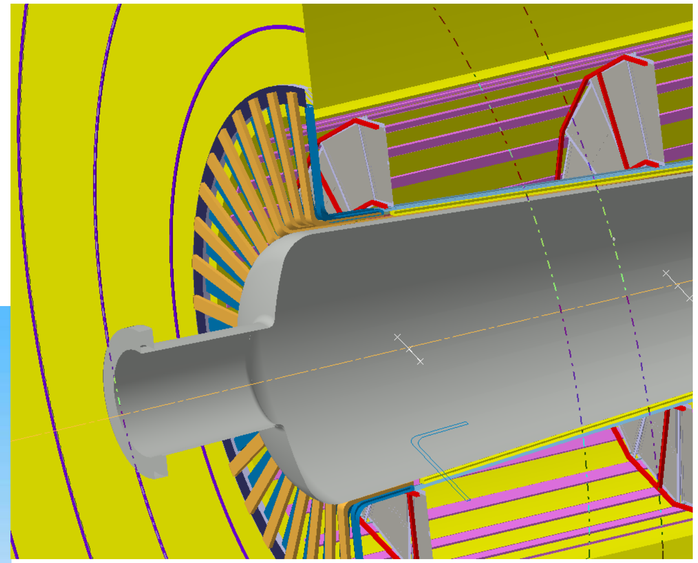

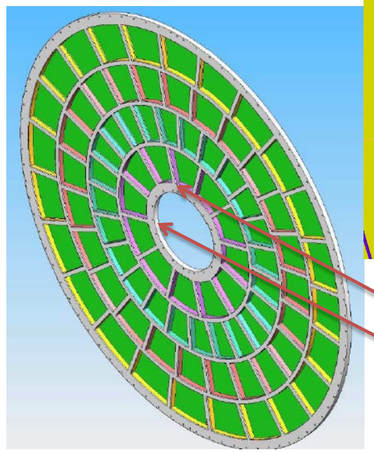

∅ Out 780
∅ In 678 of the structural ring

Ring of 5 cm enough for patchpanel
but for convertors ??

1St patchpanel :

(section of 3 time the
occupancy of the cables)

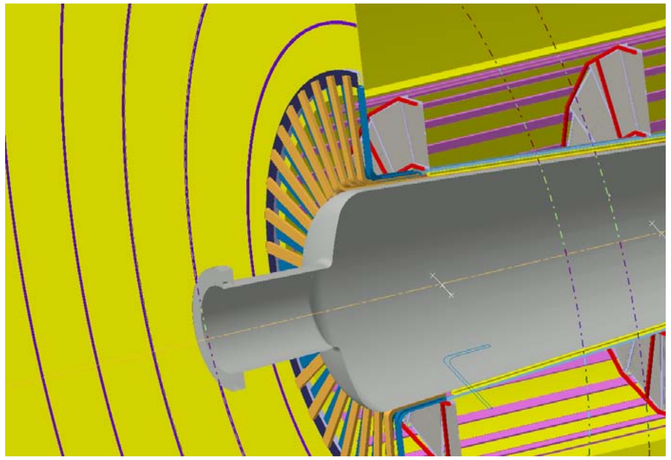

What for :

1) connectors for assembly/maintenance operations : importance of their positions
2) Optical conversion of signal ?
3) DC/DC convertor ?? (depend if already under 12 V as proposed by FTD (only 33 % of the cables are for LV (12 V), the rest : HV for Si sensor polarization)
4) Multiplexing of the power distribution in order to reduce the amount of cables along the TPC endplate (less interference with TPC modules cabling, cooling) : but in front of the Ecal endcap : is it better to distribute and average the 2600 mm² of Al on all the surface or to have +/6 12 ways out (215 mm²) (see design of TPC endplates : 12 modules in inner radius)

C. Clerc, 2012

Location of Patch Panels

- Connection to the outer detector
  - maybe even active elements…

From inner to outer : where to foresee patchpanels ?

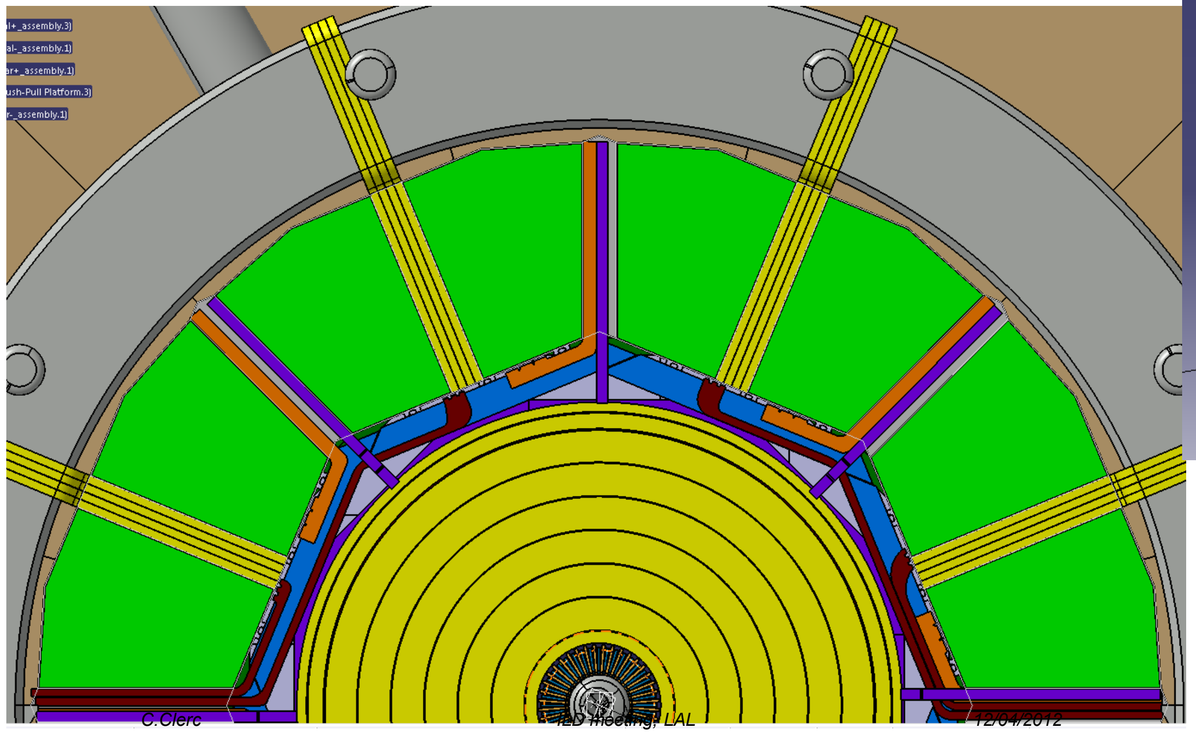

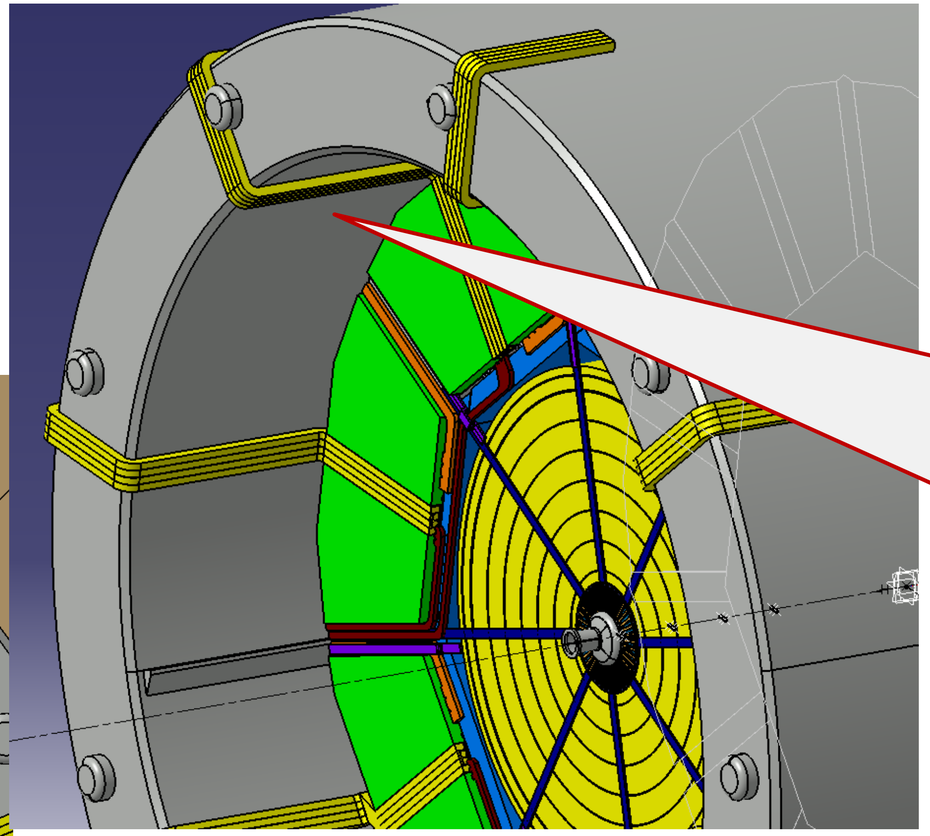

Proposition :
Use the inner radius of the coil .

For Hcal
Ecal
TPC

Inner ?

C. Clerc, 2012

Barrel-Endcap Gap

- Services of
  - Inner Detector
  - TPC
  - ECAL
  - HCAL
- need to be routed out in gap between Barrel and Endcap Detector
- Study by C. Clerc
  - 2010

Services section vs way-out

Missing : TPC cooling
Liquid supply line = 5 mm ID; 7 OD
Vapor return = 8 mm ID; 10 OD

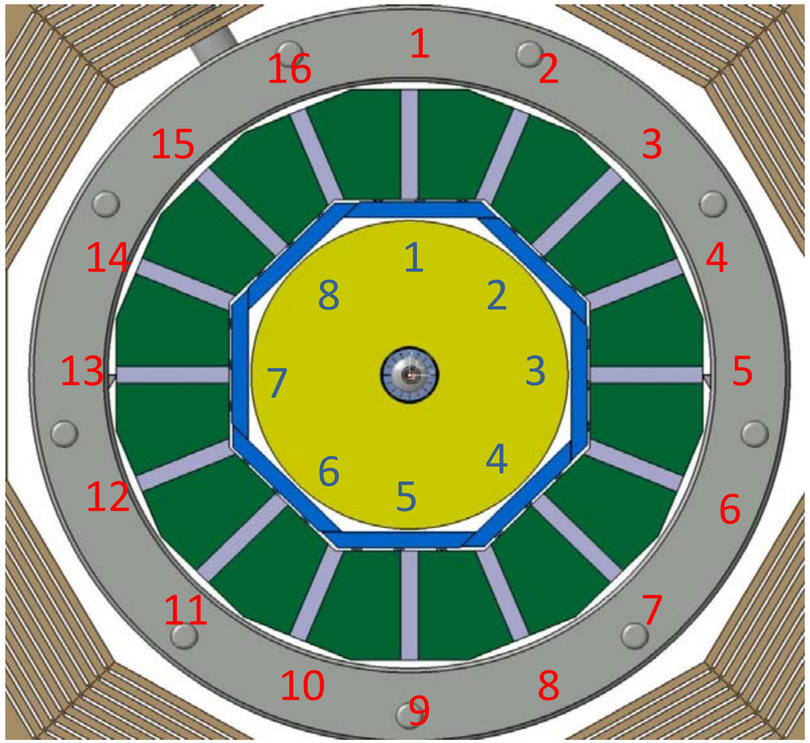

FACE Z-

	Cables				Ecal cooling		
Way in	Hcal	TPC	Ecal Barrel	Ecal Endcaps	Water Barrel Water Endcaps	Endcaps	Total cm²
1	100	0					100
2	0	10	30	7		0	47
3	100	0					100
4	0	10	30	7		0	47
5	100	0					100
6	0	10	30	7	42	14	103
7	100	0					100
8	0	10	30	7	28	14	89
9	100	0					100
10	0	10	30	7	14	14	75
11	100	0					100
12	0	10	30	7	28	14	89
13	100	0					100
14	0	10	30	7		0	47
15	100	0					100
16	0	10	30	7		0	47

Worse case : path (6), 103 cm²

C. Clerc, 2010

Barrel-Endcap Gap

- „Trenches“ between AHCAL electronics
- Completely occupied by services (cables and cooling)
  - TPC
  - ECAL
  - AHCAL

Gap : Barrel-endcaps

C. Clerc, 2010

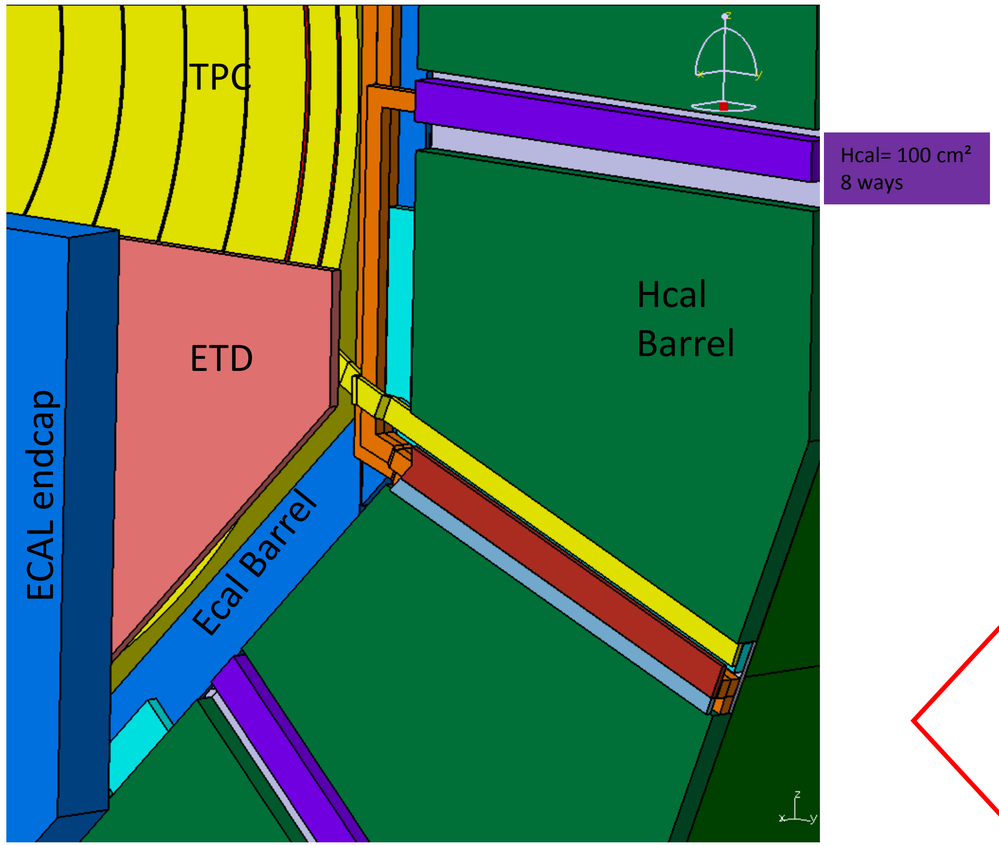

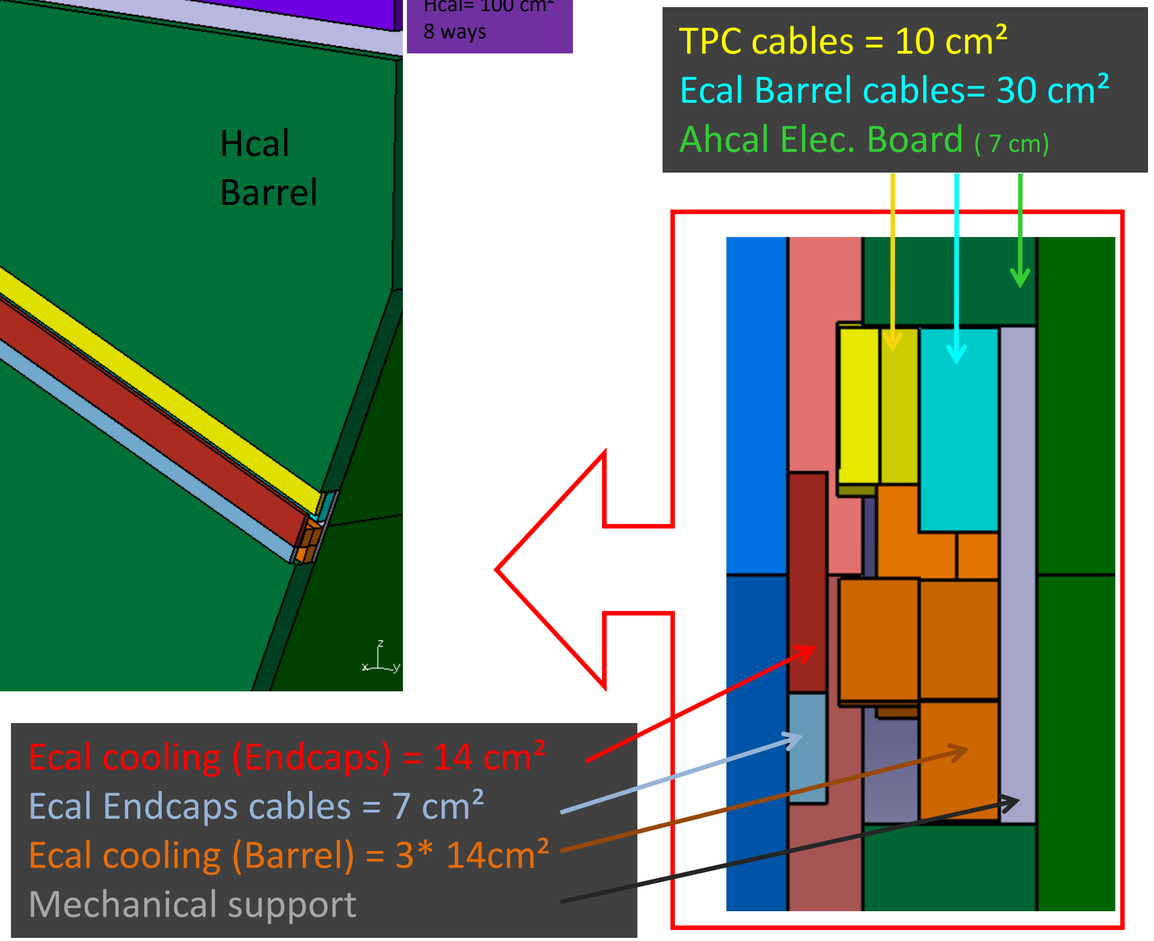

AHCAL Services - Recent Updates

- Detailed design of the AHCAL services has just been done:

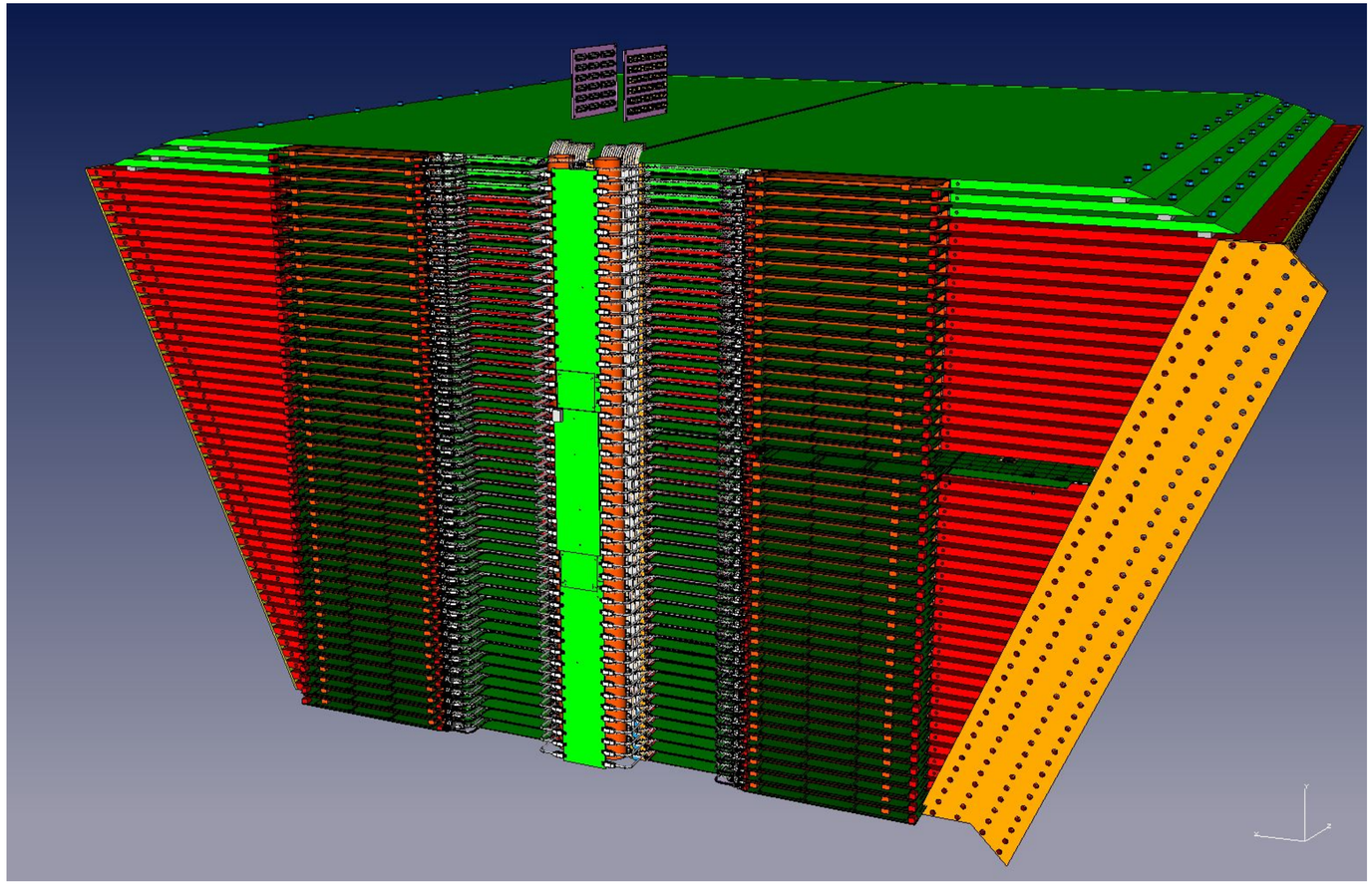

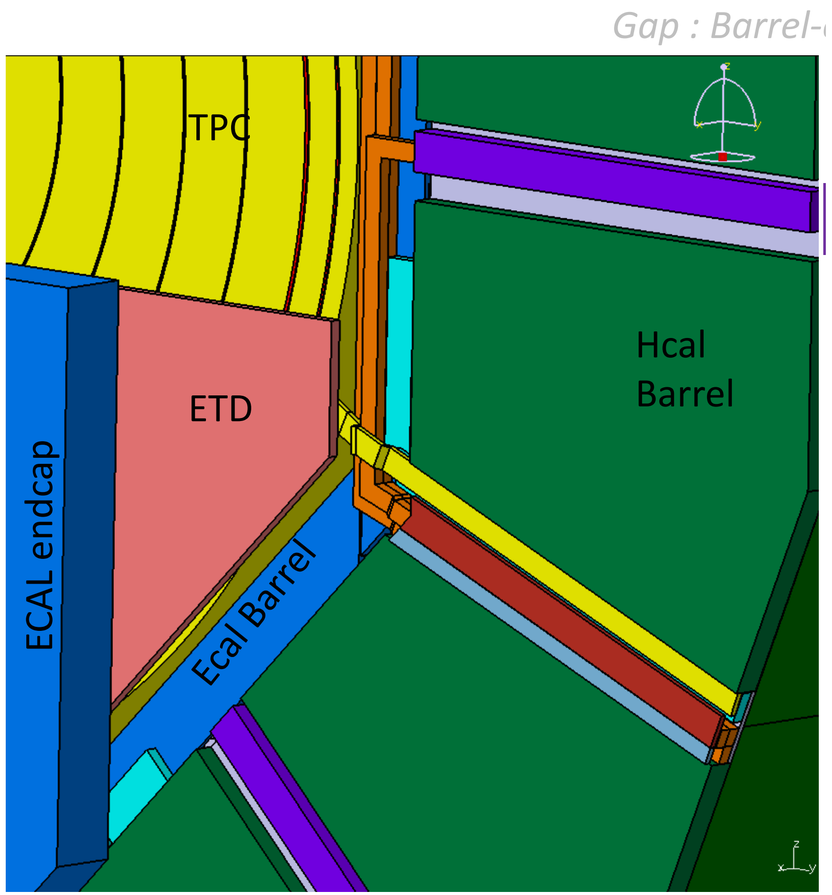

AHCAL Services - Recent Updates

- Detailed design of the AHCAL services has just been done:

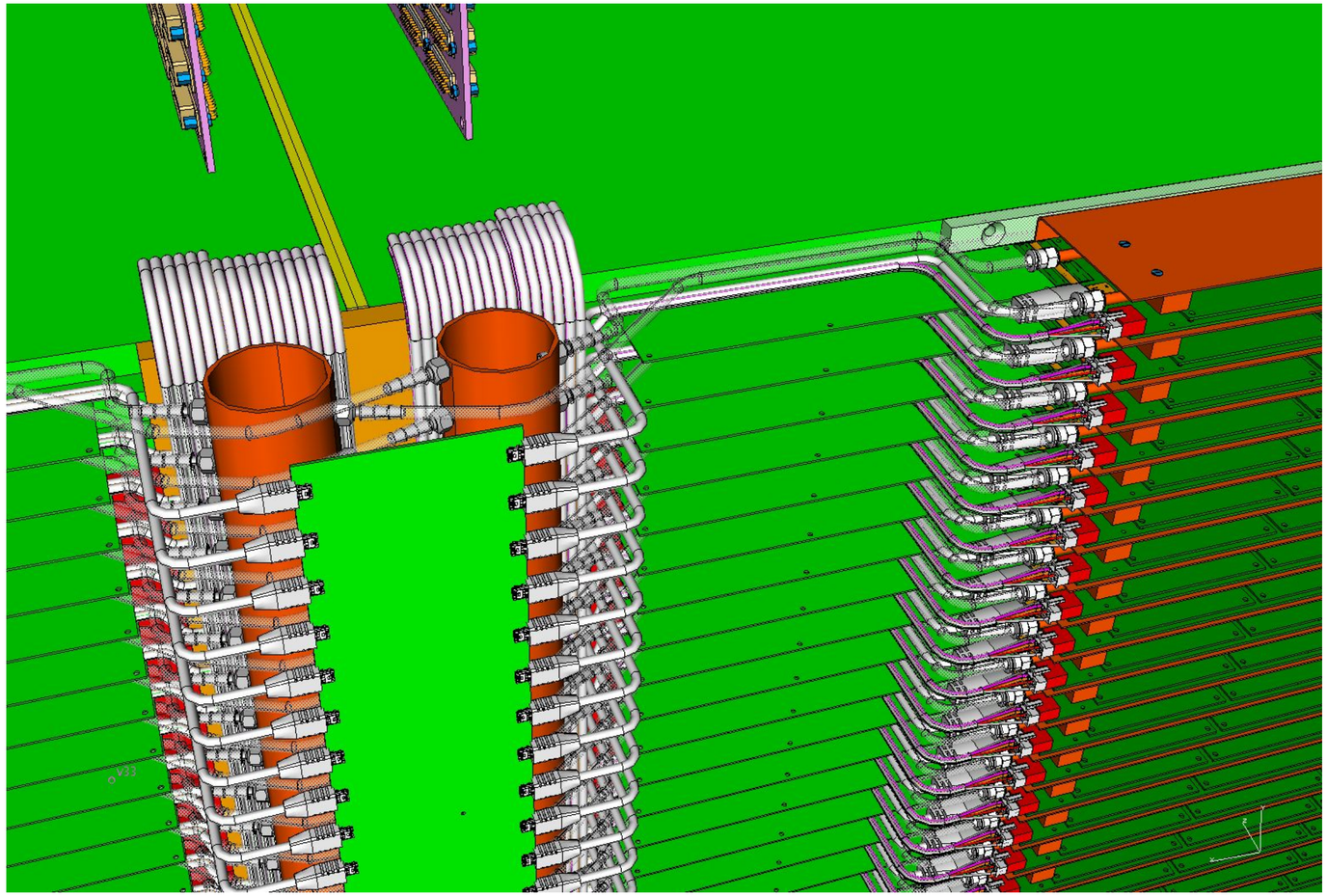

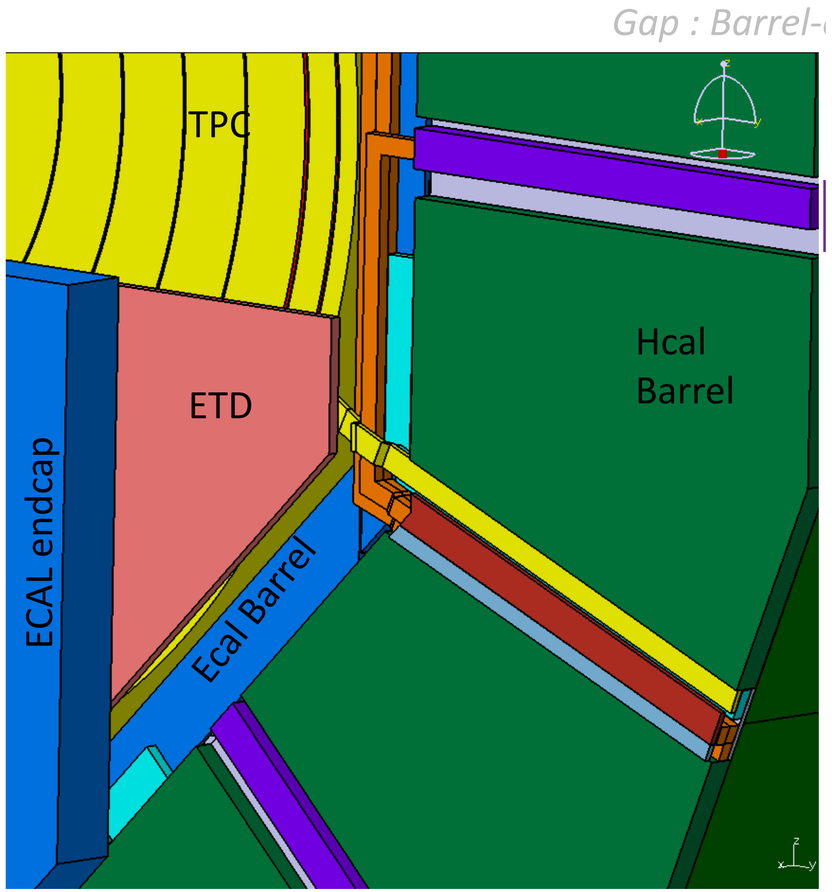

AHCAL Services - Recent Updates

- Detailed design of the AHCAL services has just been done:

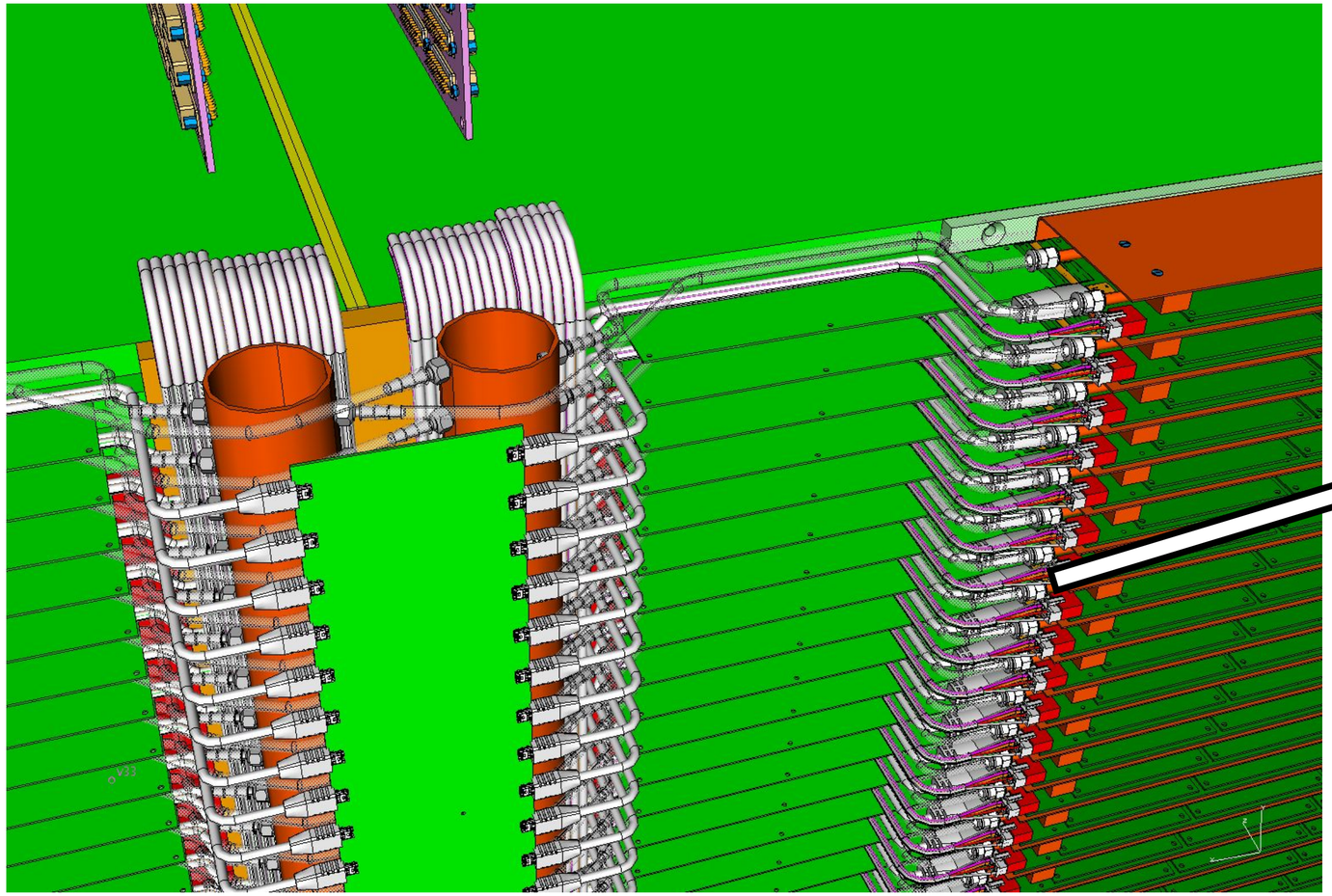

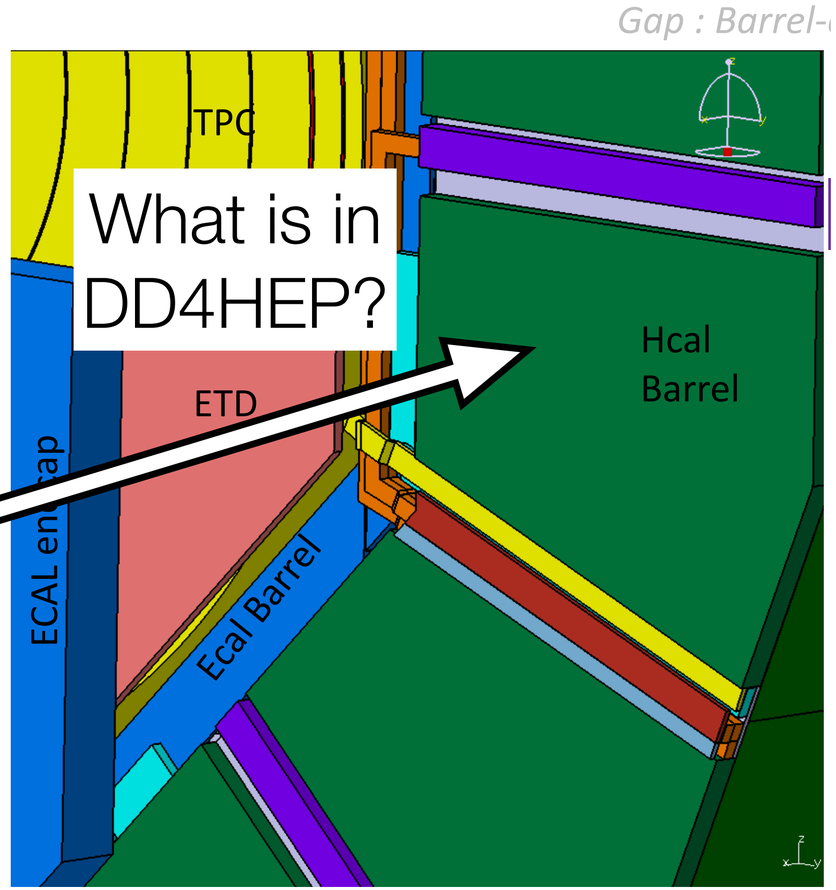

MOKKA Description of Services

- Has this been transferred to DD4HEP?

C. Clerc, 2010

Barrel services : dead materials

In the 16 ways in front of Hcal

- Support SS 1.5 cm thick
- Polyethylene
- Cu

	Z-	Z+	Average
Cu (mm)	0,82	0,74	0,78
Cu X0	57,01%	51,41%	54,21%
PE	2,75	2,56	2,65
PE X0	5,85%	5,44%	5,65%

In MOKKA !

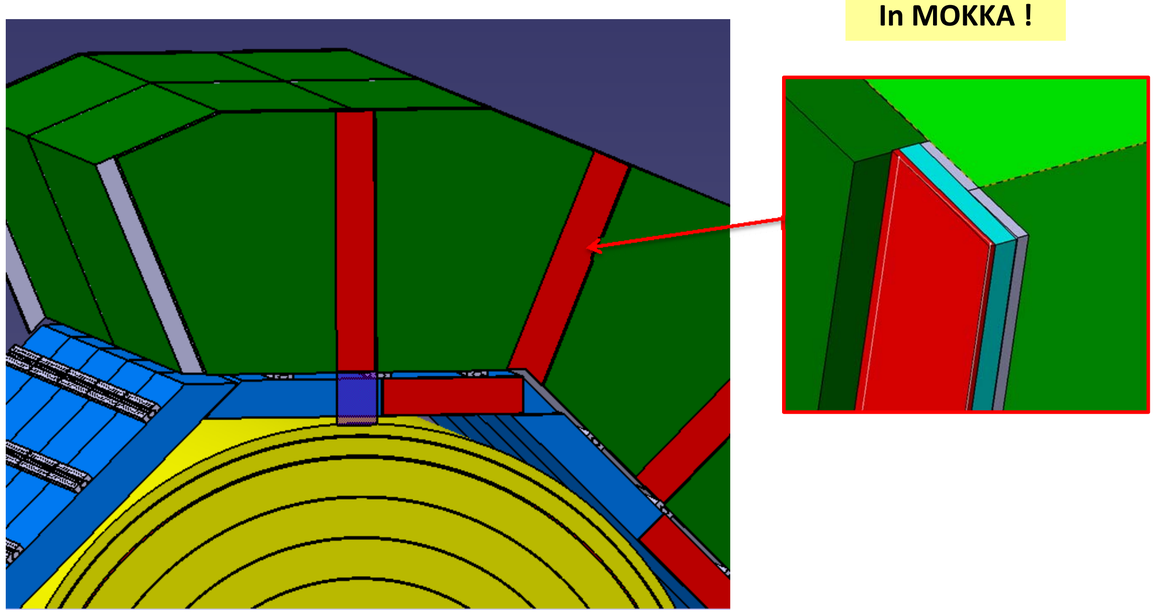

C.Clerc ILD integration meeting,CERN 18/10/2010 12

Barrel services : dead materials

In the 8 ways in front of Ecal stave

- Polyethylene
- Cu

Ecal front part

	Z-	Z+	Average
Cu (mm)	0,52	0,35	0,44
Cu X0	36,34%	24,22%	30,28%
PE	1,24	0,83	1,04
PE X0	2,65%	2,20%	2,43%

In MOKKA !

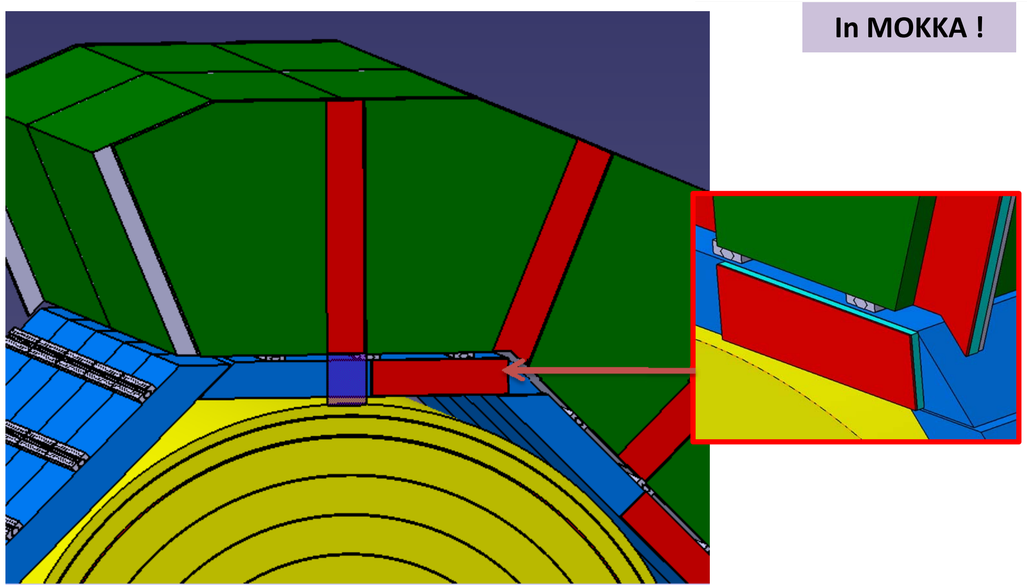

C.Clerc ILD integration meeting,CERN 18/10/2010 13

Barrel-Endcap Gap

- Can the gap between barrel and endcaps be reduced in Videau-Case?
- What about space for ETD?
  - it is still in the CAD models

Ahcal & SDHcal services

AHcal

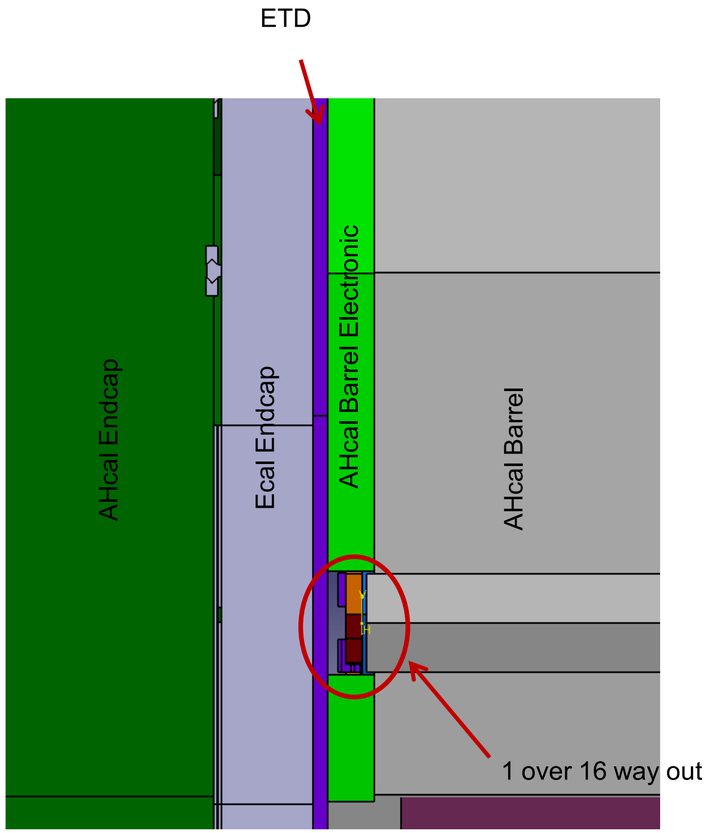

SDHcal

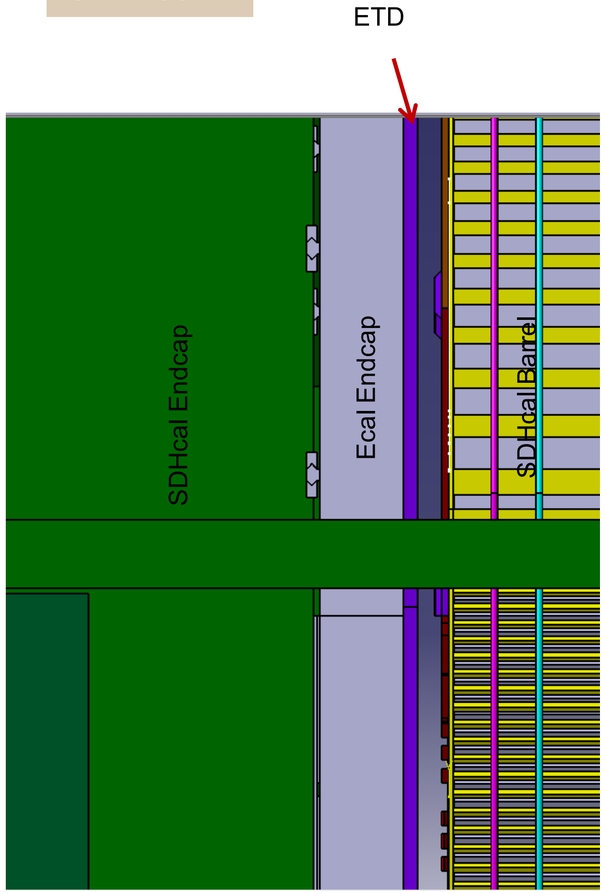

C. Clerc, 2011

SDHcal : possible to reduce the gap by few tens of mm

L* and Anti-DID

Anti-DID

- Detector Integrated Dipole field was invented by Andrei Seryi and Brett Parker to make the net magnetic field parallel to incoming beams
  - polarisation tuning, reduce emittance growth due to synchrotron radiation
- Turned out that these problems were not as bad and could be corrected without DID
- Then proposed Anti-DID: make net magnetic field parallel to outgoing beam
  - reduce background on BeamCal as low energetic charged background particles are guided to exit hole

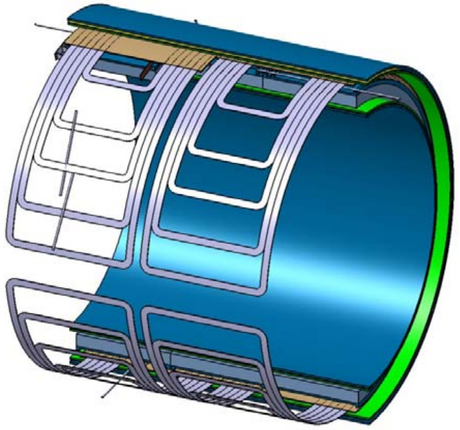

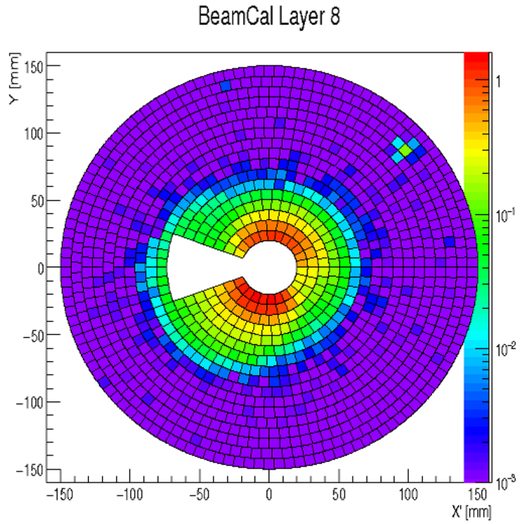

Forward Region Magnetic Fields

Seryi et al. SLAC-PUB-11662

- The magnetic fields that determine the background distribution in the forward regions are complicated overlays:
  - Detector solenoid (fringe) fields
  - QD0 quadrupole (fringe) fields
  - Anti-solenoid (fringe) fields
  - Anti-DID (fringe) fields
- A detailed 3D model of all fields would be needed to do proper background simulations.

- This needs to be done anyhow for the new L* geometries
  - collaboration with machine experts required
  - probably hard to get in view of resources at machine groups…

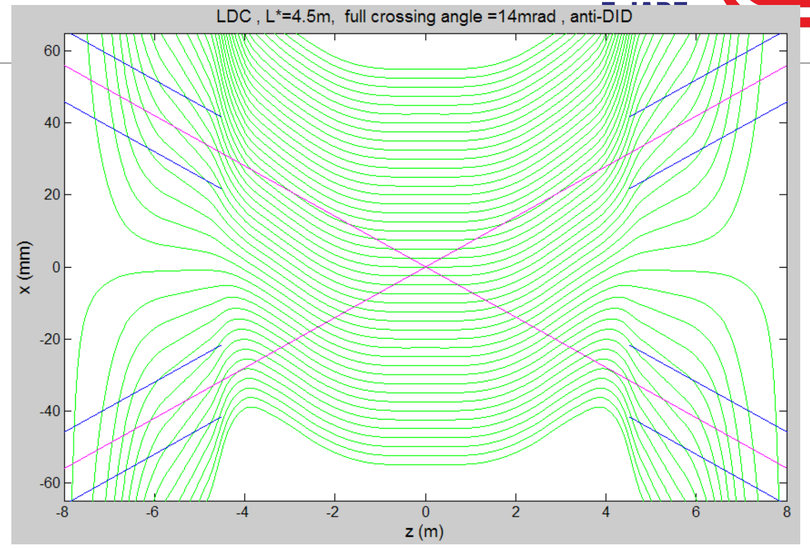

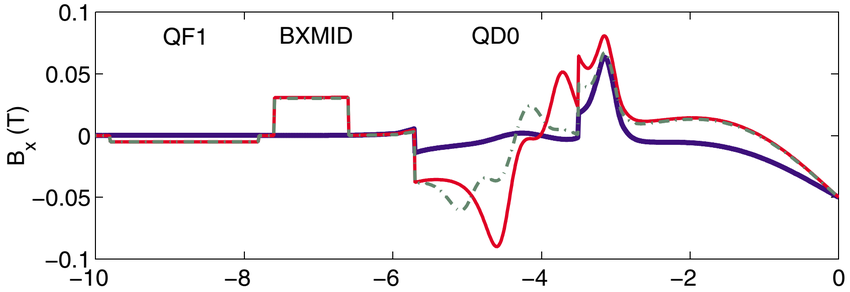

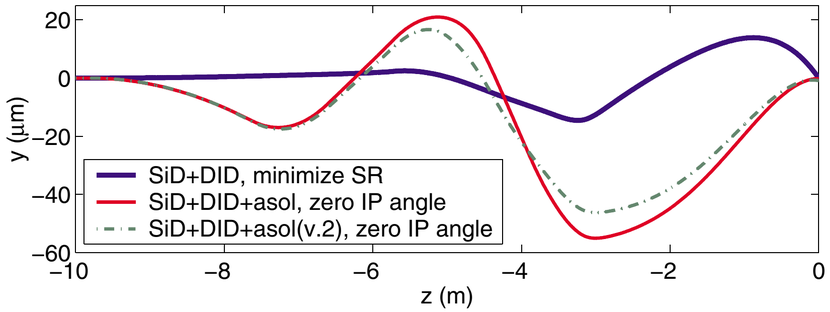

Parker, Seryi, PR STAB 8.041001

Realistic Anti-DID?

- Technical realisation studied for TDR
  - LC-DET-2012-81
- Conclusion: current field assumed in Mokka (2012) has no technical solution at this time. Need common effort between physics groups and magnet experts.

- Uwe Schneekloth will report on updates on this effort on Thursday!

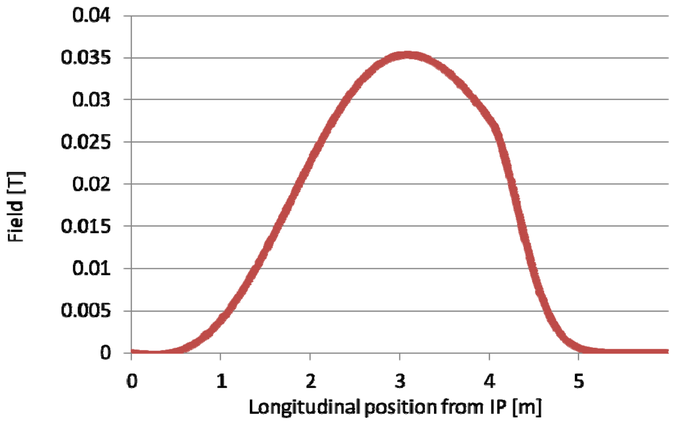

Mokka 2012

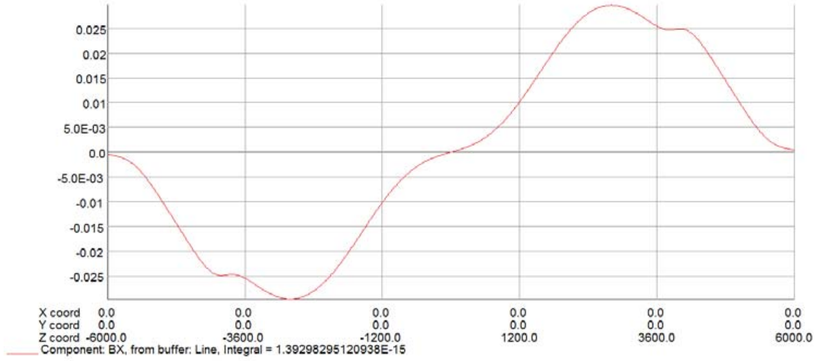

Kircher et al. LC-DET-2012-81

Summary

- The ILD model for services and cables relies on studies that have been done for the DBD
- The assumptions need to be re-synchronised with the sub-detector collaborations progress on understanding their readout electronics
- Most crucial areas for the physics simulations are the beam pipe and the barrel/endcap transitions
- New model of beam pipe has been done by Daniel Jeans which takes into account a more conservative design of the beam pipe and cables for the inner detectors
  - details about VTX, SIT and FTD-pixels still required
- A material description of the services and cables in the barrel/endcap transition region was in MOKKA
  - needs to be checked whether it has been modelled correctly in DD4HEP
- Work on realistic Anti-DID magnetic field description is on-going
  - field map for DD4HEP exists
  - update on Thursday (talk by Uwe Schneekloth)