ECal interface status

Henri Videau
Laboratoire Leprince-Ringuet

April 26 2017

This presentation refers to the one I made on ECal models
in Orsay March 2017.

It will concentrate more on the interfaces than on the models.

The last version of the ECal TDD can be found at
https://llrbox.in2p3.fr/owncloud/index.php/s/kLErREKIKDOmIoR
at the Orsay meeting I gave also a link, as far as I know no one went there!
a reminder: the official baseline main dimensions are to be found in the TDR

Today most of the material comes from the ECal TDD.

In this document three mechanically different versions of the ECal are described:
The baseline as in the TDR, slightly modified for realism,
The “small” version where the barrel radius is reduced from 1843 to 1500
The version with a number of layers reduced to 22 and the Si thickness increased
For the question of today, interfaces, they are not much different.

The electromagnetic calorimeter is made of 3 parts: a barrel, 2 end caps, 2 rings
It exists in 2 official models: ILD, and the Small I Large D.
Some modifications have been proposed to the baseline for the thickness (TDD being rather unrealistic) and the change request is being processed.
These points do not strongly affect the interface questions.

Baseline: inner barrel radius at 1843mm, barrel length at 4700mm

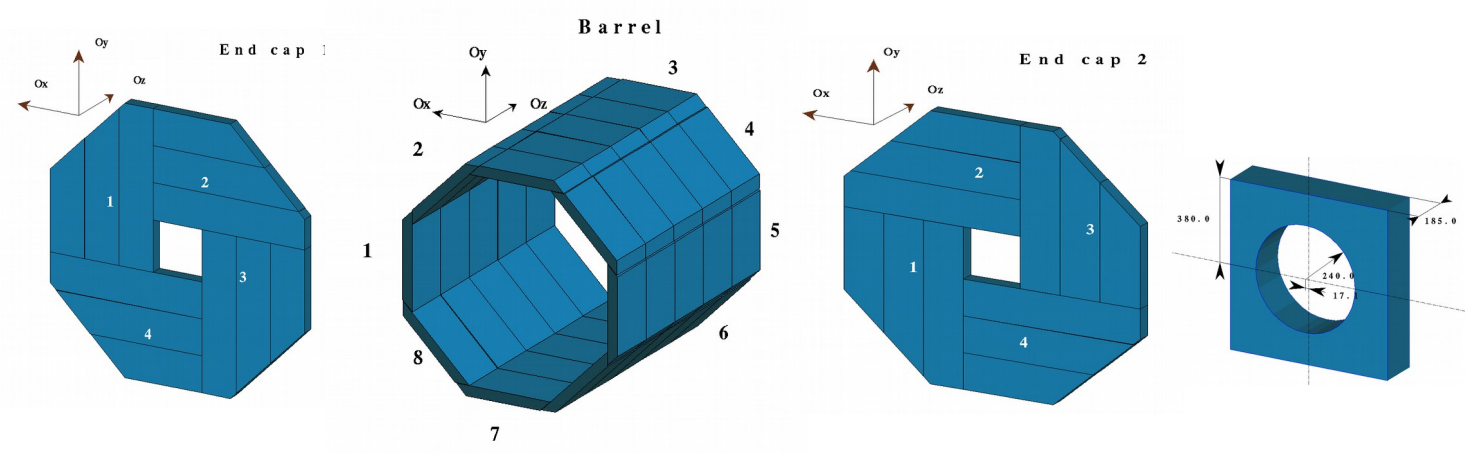

self-interface

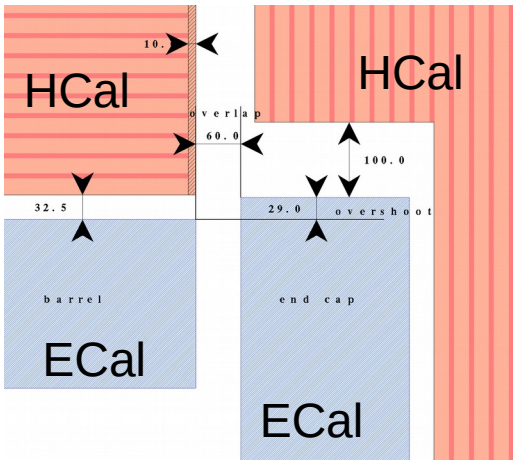

SILD: inner barrel radius at 1500mm, barrel length kept at 4700mm

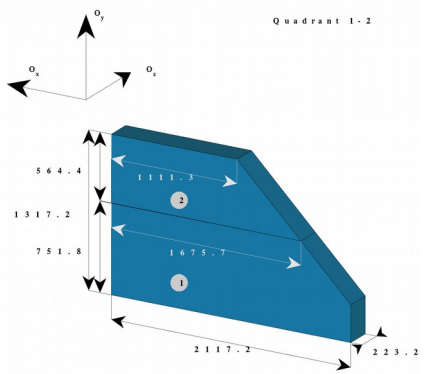

only two modules per quadrant

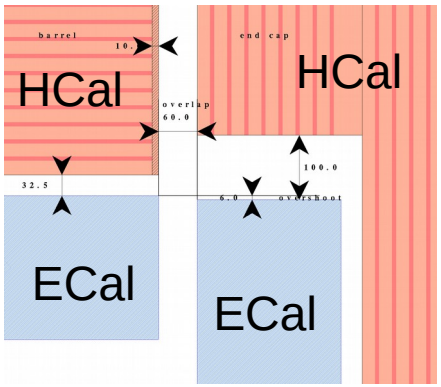

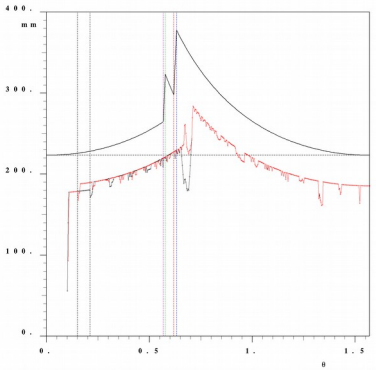

Depth of the calorimeter along a projective line, in red number of X0 in baseline by MOKKA

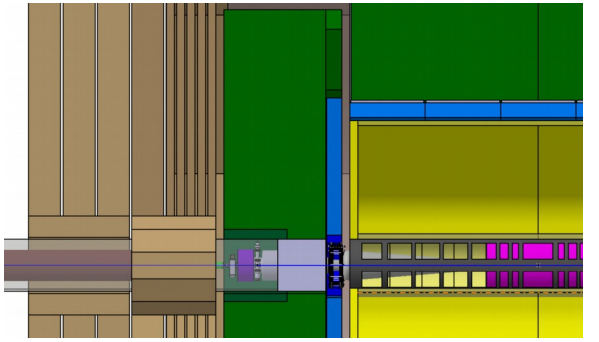

1) Ring / end-cap.

The ring is inside the end cap.
There is a clearance of 10mm between ring and end cap
The ring is fastened to the forward structure for opening not to the end cap
and the services run accordingly. Not much work done, at least specific electronics may be needed

2) End-cap / barrel

There are two parameters, the overshoot relates the end-cap radius
to the barrel inner radius, the overlap is the distance barrel to end-cap.
This overlap has to contain a clearance for the move of the end-cap,
it is the place where barrel cooling and patch panels may end up
it is also the passage for TPC suspension, TPC and inner detectors services
it is a very delicate place for the reconstruction of particles crossing it:
the smaller the better but many constraints poorly defined now.

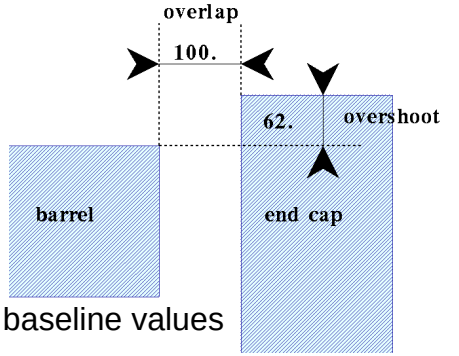

baseline values

The ECal barrel is fastened to the HCal barrel
The ECal end-caps are fastened to the HCal end-caps

Barrel:

the ECal barrel is not a structure by itself.
It is an ensemble of 8 staves fastened independently to the HCal barrel.
They follow then possible deformations of the HCal barrel.
The staves are fastened to the HCal via two male rails running along the staves,
the female rails are installed on the inner face of the HCal
once it is assembled. The constraint from the ECal
is to keep within the clearances (2-2.5mm) between staves,
and between staves and HCal,
alternatively these clearances can be enlarged
at the expense of the calorimeter performance.

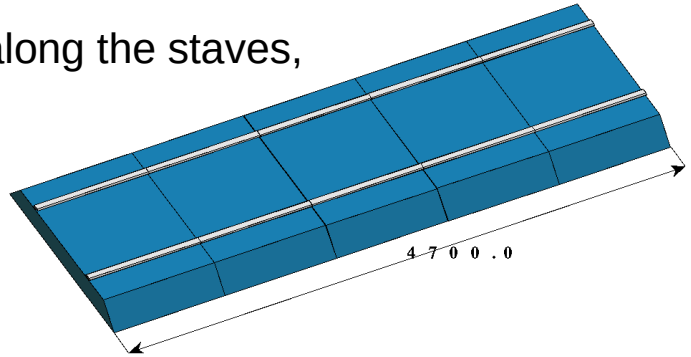

End-caps:

the modules are independently fastened
by 2 male rails on female rails running
on the front face of the HCal end-caps
according to adjacent drawings by D. Grondin.
The different solutions for the HCal end-caps
should at some point
be examined under this light.

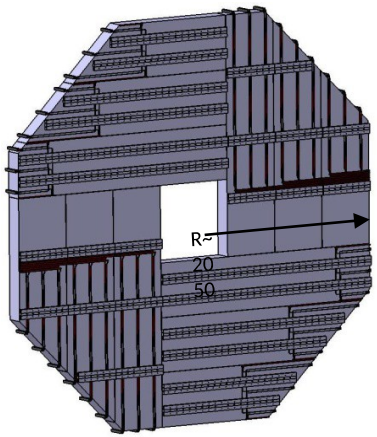

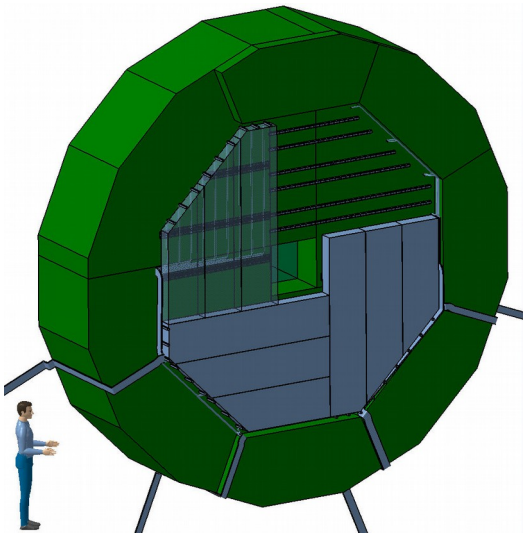

ECal-TPC/inner detectors/SET interface

1) TPC fastening

To my knowledge there is not a clear and unique solution
but surely the TPC does not hang from the ECal
sort of belts would run from TPC wheels to the HCal barrel or
farther away to the cryostat.
Three such belts could be considered at say 2, 6, 10 o'clock.
They go through the overlap and interfere strongly with the ECal cooling
and the cable paths.
This does not ensure the longitudinal stability which may need an interface
to the end caps, but not a lock!

2) TPC services

They have to run between TPC and ECal end-caps
cooling, cables (signal and power), patch-panels
the last information on the point is 6 years old!

an update of these points
seems mandatory to
pursue the ECal design

3) Inner detectors services

these detectors are fastened to the central structure
but where are the services running?
along the beam or in front of the ECal?
what amount? patch-panels ?

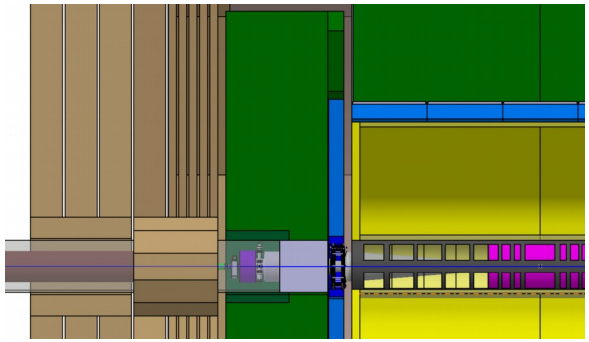

4) SET fastening and services

not much is known. Does it need its own mechanical structure “à la Aurore”?
does it hang from the ECal, does it stay on the TPC? Services go in the overlap but...

could a task force
provide a default scheme?

What gets in and out of the ECal?: Voltages, signals (data and control), cooling
what are the routes to follow (constraints)?
what volumes are needed?
what does it interfere with?

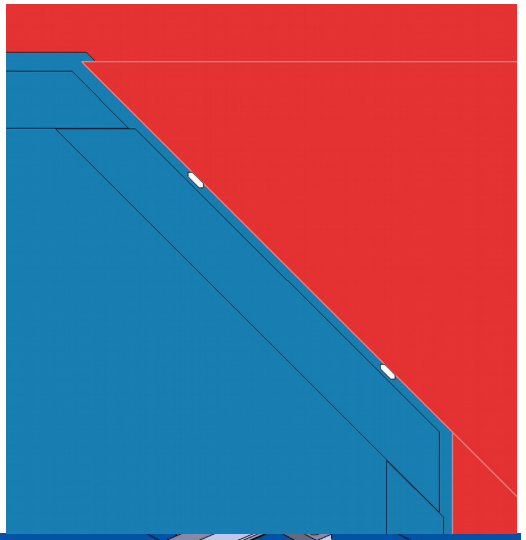

The design of the ECal (HV2) provides
a VFE electronics buried in the detector and unlikely to be exhumed after being carefully burnt in,
thoroughly tested and equipped with redundancies at all levels
sheets of copper bring passively the heat out,
power and signals move into PCB's,
all input and output go through the place reserved on the back of the calorimeter.
We have then to bring in or out of that place
power, controls, signals, cooling.
This place contains also a first level of signal concentration.

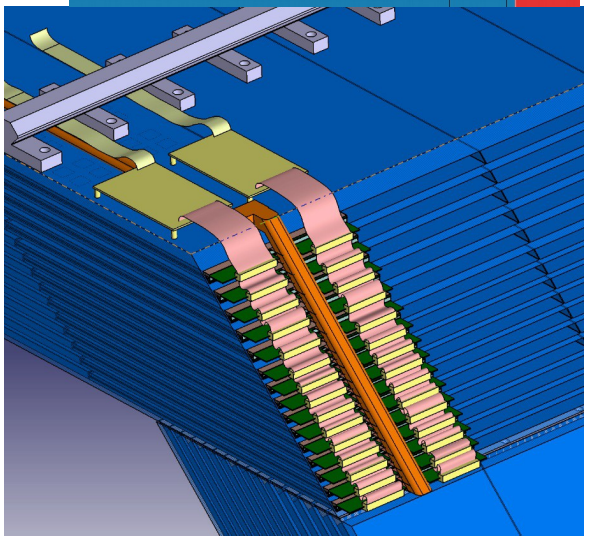

Power: we have to bring in different voltages,
up to 400V for the diodes (for 725µ wafers)
about 3V for the electronics. We have to handle the power pulsing.
The solution under study is to bring high voltage and use converters somewhere on the ECal in 4T. (currently not designed)
This makes the interface to the external world easy but the ECal more difficult.

ECal cables

Power, cables and cooling would run between HCal and ECal on the back of ECal the way it is shown in the picture which exhibits the principle rather than any real design.

The paths of cables and cooling interfere strongly (cross).
As a working assumption the cables
would run to one end of the staves
and the cooling to the other end.

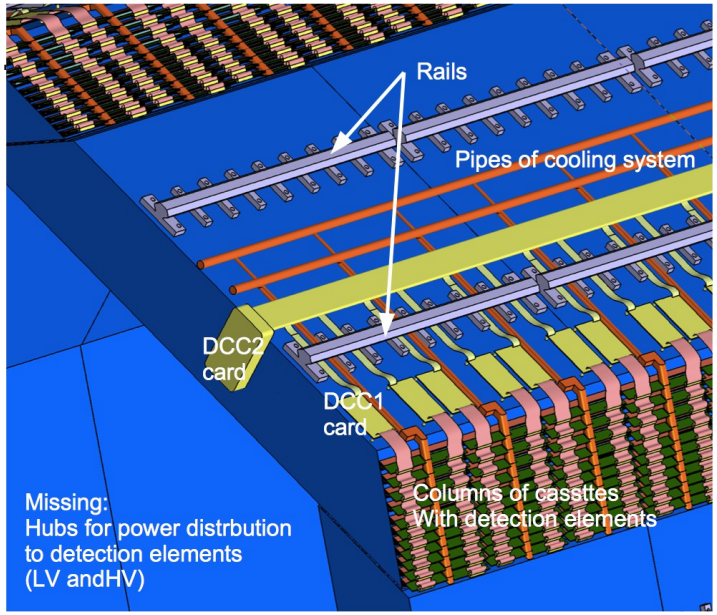

DCC1 figures a concentration/distribution
at the alveoli level
DCC2 (or Hub2) a concentration/distribution
at the stave level.
From then on cables or fibres run along the black
path to the outside

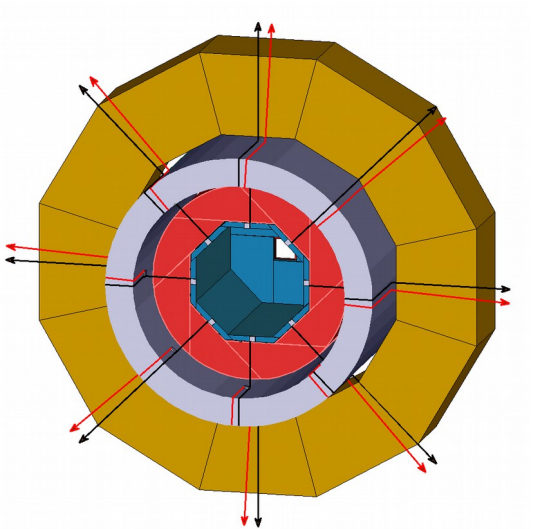

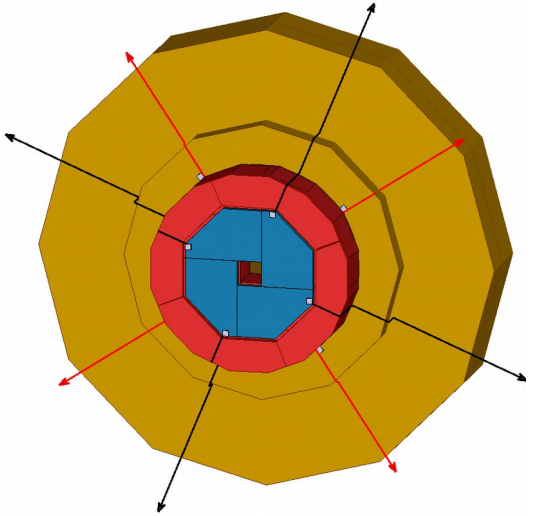

ECal cables interference

The final hubs have to be installed on the stave to serve during the testing as well as in the installed detector. They are therefore installed on the flange of the stave (see drawing) or in the ECal/HCal space close to the flange.

These hubs are currently under study but they are likely to be much larger than drawn. They have to fit in the overlap or between ECal and HCal, their thickness is therefore about 30mm. Feasible?
Converters and cables are being identified, no real design exists for the moment. But these hubs are likely to occult an important fraction of the overlap.

Many basic informations are lacking like the power needed, for the VFE the uncertainty is of a factor 3.

hubs have a function of patch panels

ECal cooling

The cooling should be a specific talk (and task in ILD)
in view of the importance and the specificity of the subject.

The cooling, studied in Grenoble (AIDA), is a leakless water cooling, see picture.

To make it leakless, underpressure, has some consequences:
the loop of water has to be high enough (atmospheric pressure) and that may be a problem for the “small” model
but for digging into the platform?
The water pipes have to come from below, they are not that narrow.
For safety reasons (4T) pneumatic valves are added to close the circuits.
From the drawing it is clear that, on one side of the barrel they occult largely the path for TPC belts and other services.

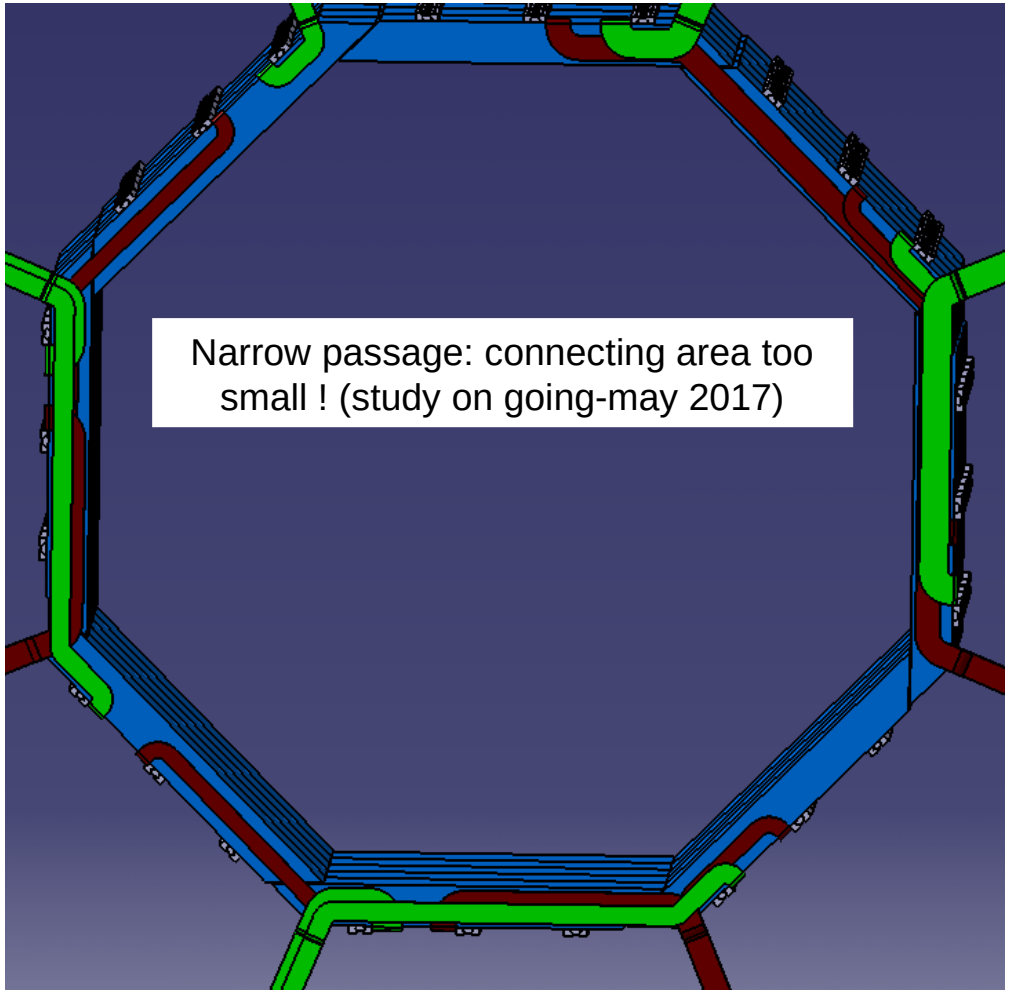

Air pipe :
Water pipe

In fact a realistic solution needs to know how the TPC is suspended and what are the services it needs also the right level of knowledge about the ECal power to get rid of.

Summary

According to me,

there is quite some good progress in the ECal-Si design (not described here)
for different solutions, baseline, small, with reduced layer number,
but *we can not state that we have today in hands the processes to build it*.
The slab assembly is well under study, mechanical and connection.
The FE electronics needs work, the powering system as well,
hence the power consumption.

This hampers the development of the interfaces.
The mechanical interface to HCal is under strong study.
The interface with TPC and even more SET is fully deficient.

This has strong consequences on the development of central points like cooling.

May be the publication of the interface document under preparation and full of question marks will give a strong impetus.

The End