Dead zone analysis of ECAL barrel modules under static and dynamic loads

***Marc Anduze*, Thomas Pierre Emile – LLR**

CALICE Collaboration Meeting @Tokyo
September 25-27th 2017

LLR Ecole Polytechnique
F - 91128 PALAISEAU Cedex

Purpose

Optimize the hermiticity of the ECAL by reducing as much as possible dead zones of the detector, in particular gaps between each modules of the ECAL (barrel & Endcaps) under environmental loads.

Installing the ILC and the associated detector(s) in Japan requires to take into account seismic hazard when designing the instruments

So, all systems have to be designed to resist to vertically applied loads (**gravity**) but also horizontal **seismic loading** because seismic loads (dynamic) can induce forces with the same order of magnitude or higher than gravity.

We need to estimate the gap ❶ and ❷ which are required for ECAL assembly and to avoid mechanical contacts over the ECAL lifetime

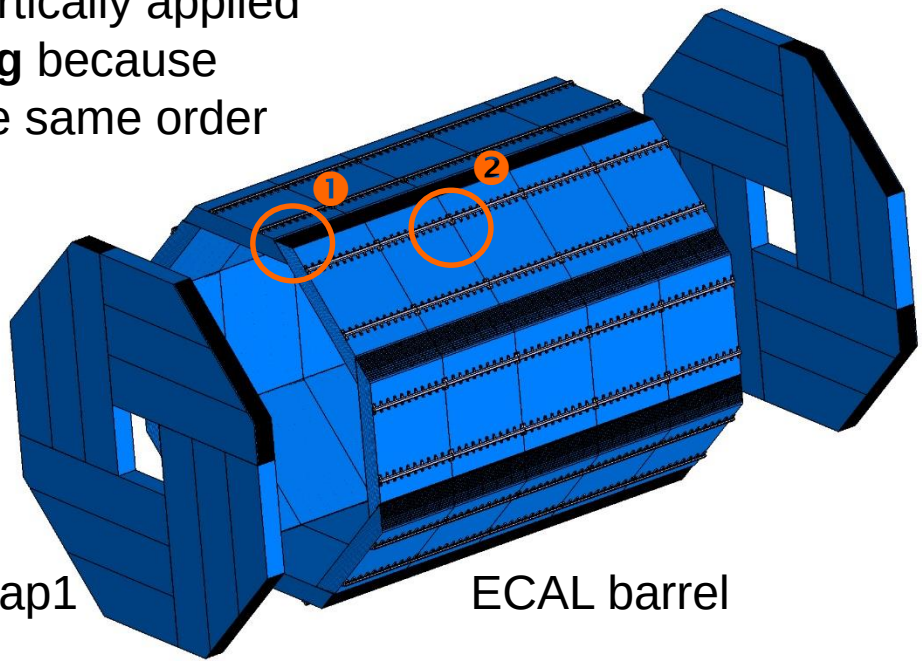

Analysis Procedure

Gap ❶ analysis in STATIC CASE

- One static load is expected : **Gravity**
- Impact the gaps in **phi angle** due to vertical loads (initial value : 2.5mm for BL)

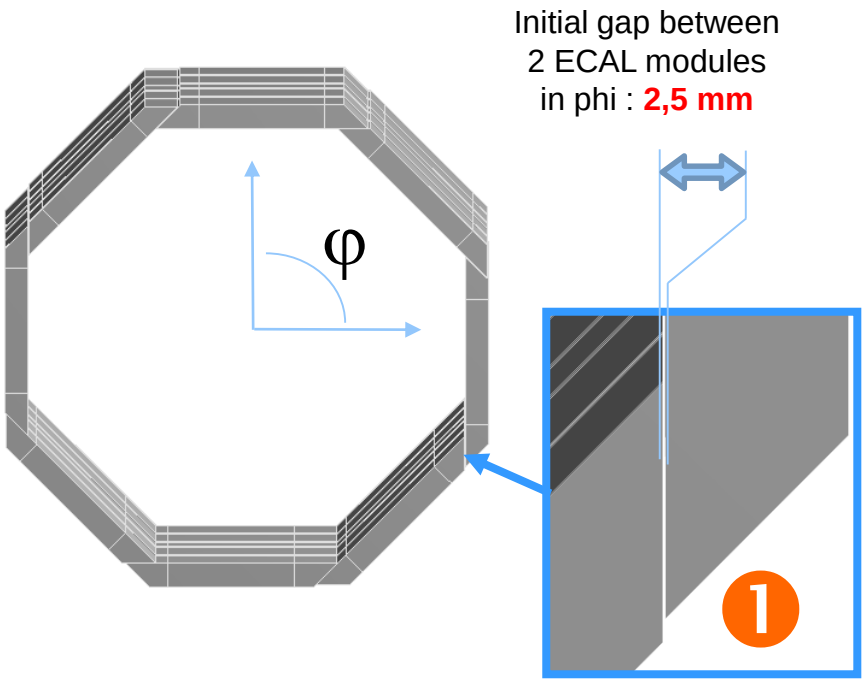

Gap ❷ analysis in DYNAMIC CASE

- One dynamic load is expected : **Acceleration spectrum from earthquake**
- Impact the gaps in **Z direction** due to horizontal ground motion (initial value : 1 mm for BL)

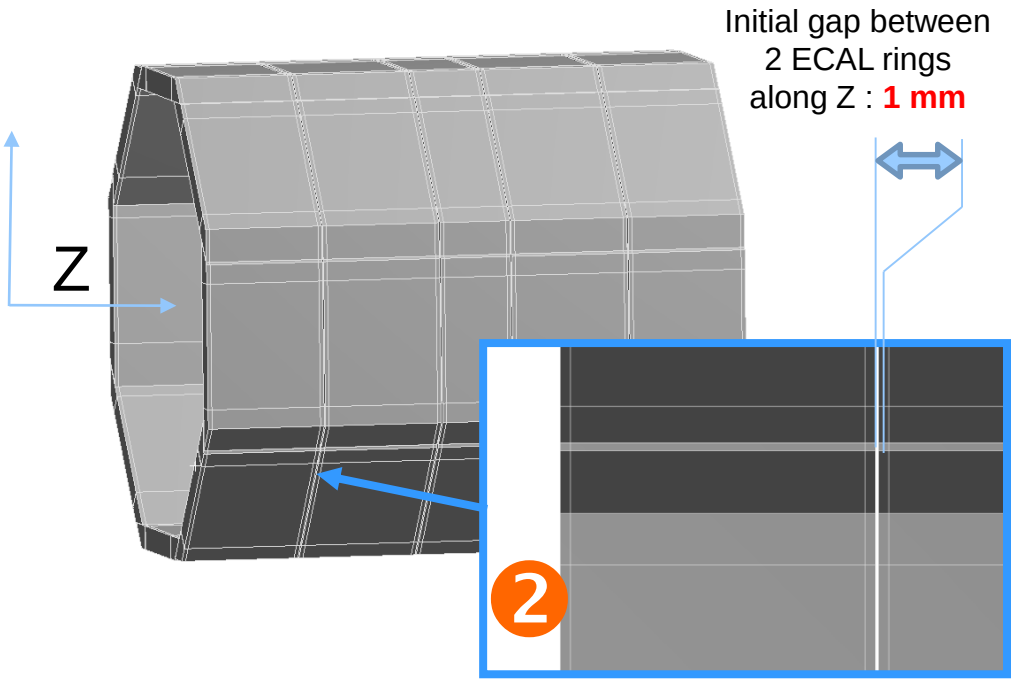

Static case model (Gap ❶)

Model definition & simplifications:

- Limited to HCAL+ECAL barrel (no impact of other elements)
- ECAL model used is equivalent 3D solid model (simplified model)
- Both SDHCAL and AHCAL are used (Two designs : VIDEAU and TESLA) to compare the impact of the geometry
- Shell elements are essentially used
- Every sub elements are supposed to be perfectly fixed together (no relative motion allowed between differents parts)

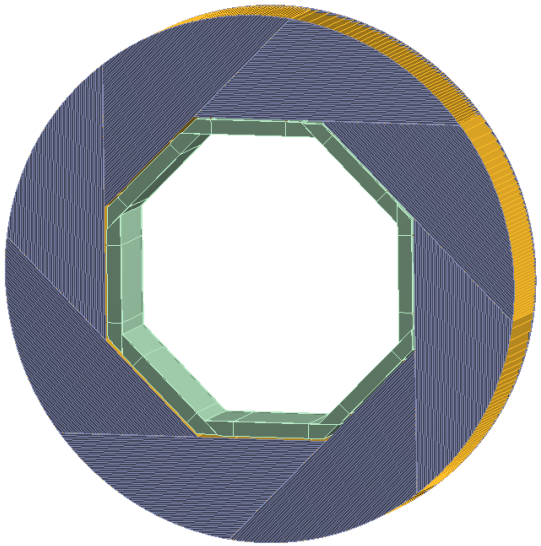

SDHCAL model :
VIDEAU geometry
Mass = 750 t

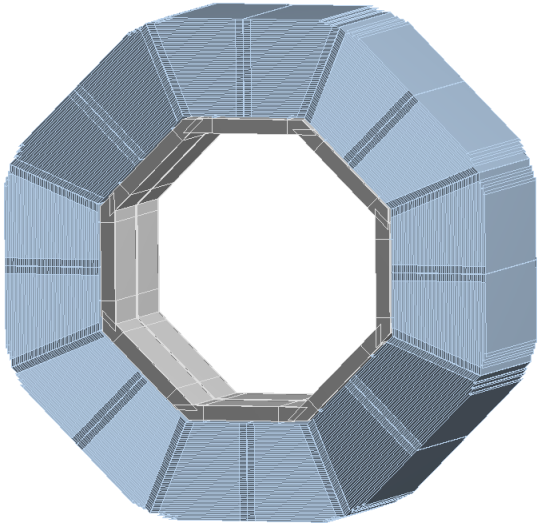

AHCAL model :
TESLA geometry
Mass = 705 t

Static case results (Gap ❶)

Preliminary Analysis Results:

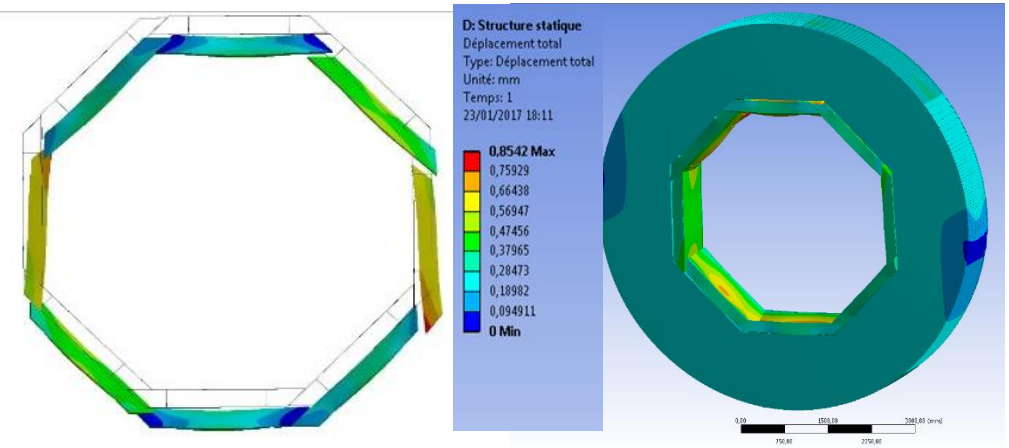

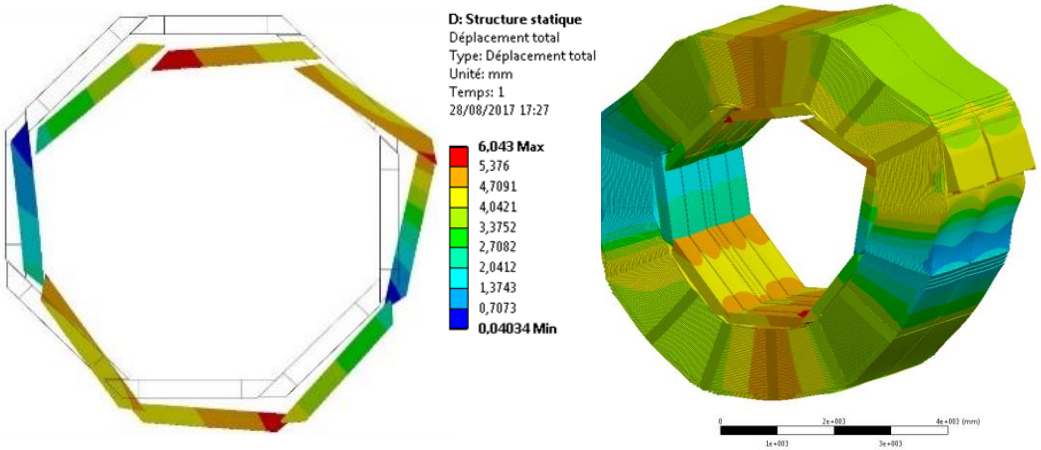

VIDEAU model :

Total displacement 0,9 mm
Smallest gap between ECAL modules in phi : 2,31mm

TESLA model :

Total displacement 6 mm
Smallest gap between ECAL modules in phi : 0,95 mm

SDHCAL design seems to be stiffer and reduces ECAL modules relative motion :
Best case to optimise the gap ❶

Dynamic case model (Gap ❷)

Model definition & simplifications:

- Model based on ILD baseline geometry ;
- Limited to TESLA case for the barrel (more flexible model) and central part of the yoke ;
- Shell elements are essentially used ;
- Every sub elements are supposed to be perfectly fixed together (no relative motion allowed between differents parts) ;
- Response Spectrum : Input taken from « Standard Reference Earthquake Parameters » Toshiaki TAUCHI, April 2017 @ Lyon

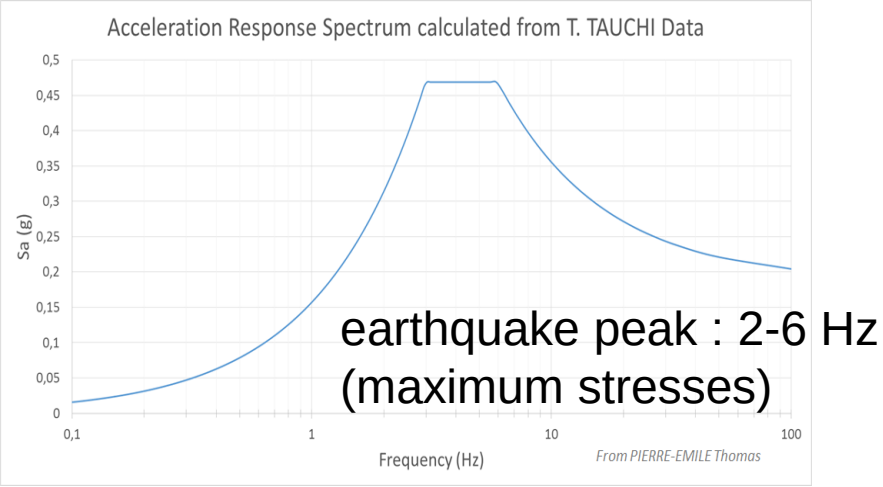

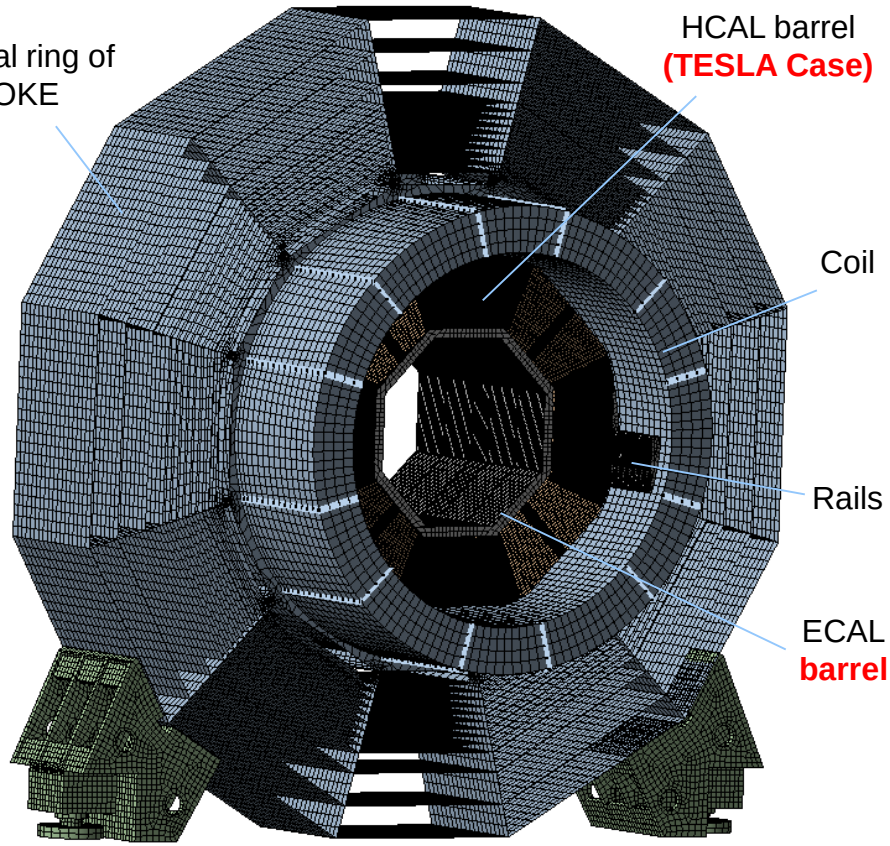

ILD model :
Mass = 3100 t

Dynamic case Results (Gap ❷)

Preliminary Analysis Results: **Eigen Modes** (states of excitation/vibration under specified fixed frequencies called resonant frequencies)

Mode 1 @ 2,3Hz

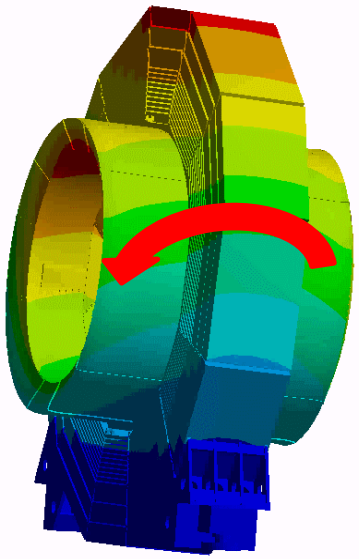

Mode 2 @ 3,05Hz

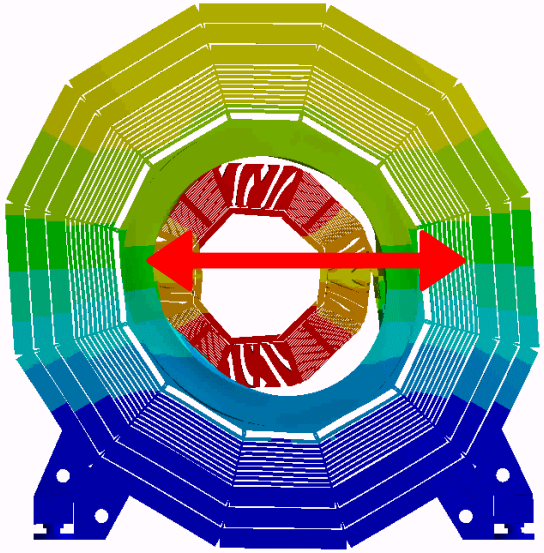

Mode 3 @ 3,8Hz

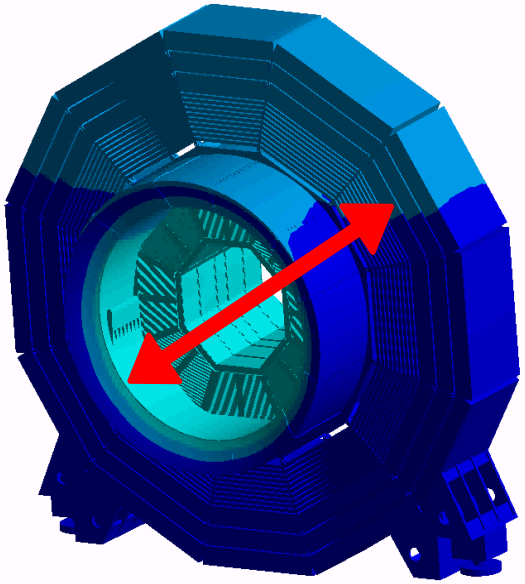

Mode 6 @ 7Hz

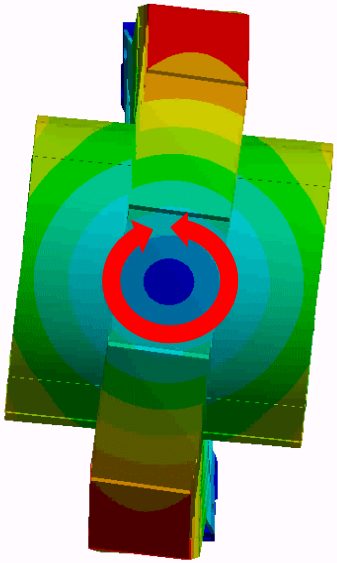

Due to the very heavy structure, 6 global modes are included into the range of earthquake peak 2-6 Hz

Dynamic case Results (Gap ❷)

Preliminary Analysis Results: **Response spectrum - detector axis (Z) only**

With the acceleration response spectrum applied along Z axis, the fundamental mode of the structure dominates: back and forth motion of the yoke ring

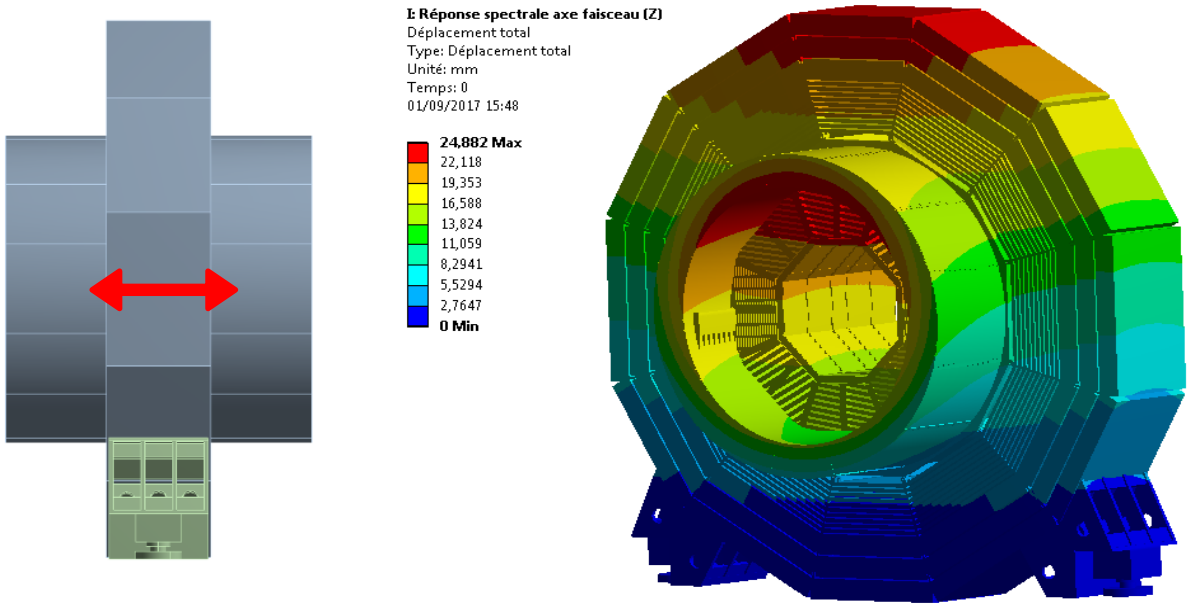

Maximum displacement: **24,9 mm**

Smallest gap between ECAL rings along z: **0,98 mm**

Smallest gap between ECAL module along phi: **2,29mm**

- No relative motion along Z between ECAL modules. The barrel follows the global motion of the YOKE+HCAL
- Attaching the 3 rings together is probably the way to go to increase the overall stiffness and reduce the peak displacement

Dynamic case Results (Gap ❷)

Preliminary Analysis Results: **Response spectrum – Lateral only**

With the acceleration response spectrum applied along lateral axis, the mode 2 of the structure dominates: left to right motion of the barrels

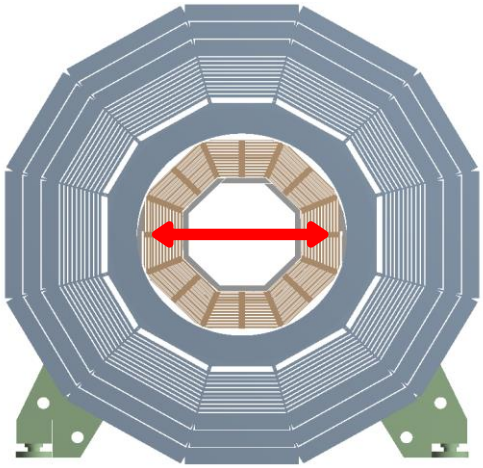

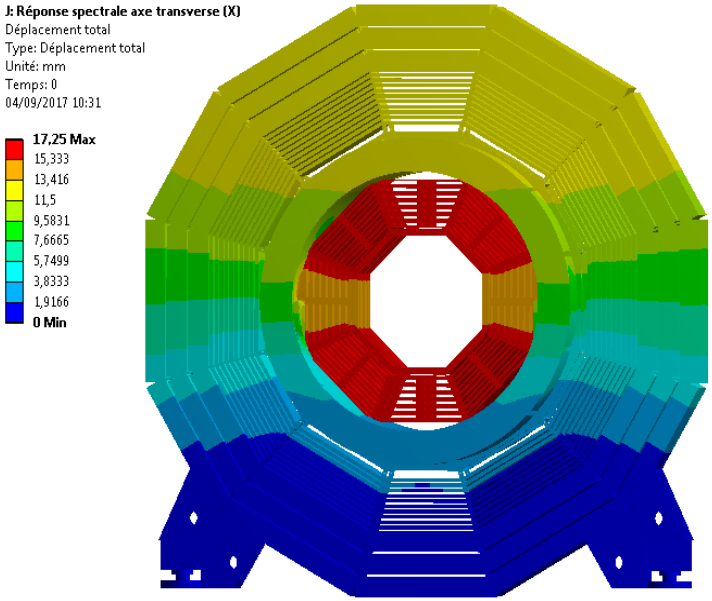

Maximum displacement: **17,3 mm**

Smallest gap between ECAL rings along z: **0,98 mm**

Smallest gap between ECAL module along phi: **1,89mm**

➡ No significant Z relative motion in traverse direction between ECAL modules

Dynamic case Results (Gap ❷)

Preliminary Analysis Results: **Response spectrum - Up and down only**

With the acceleration response spectrum applied along third axis, the displacement is significantly lower (less than 3 mm).

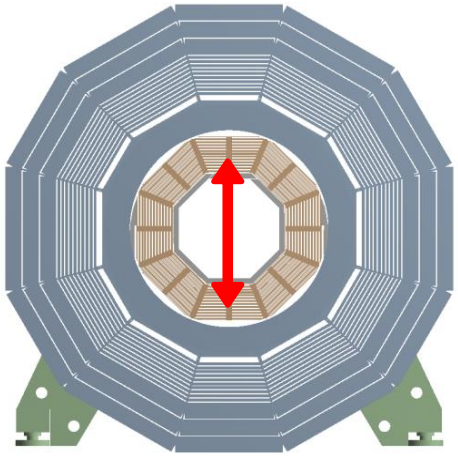

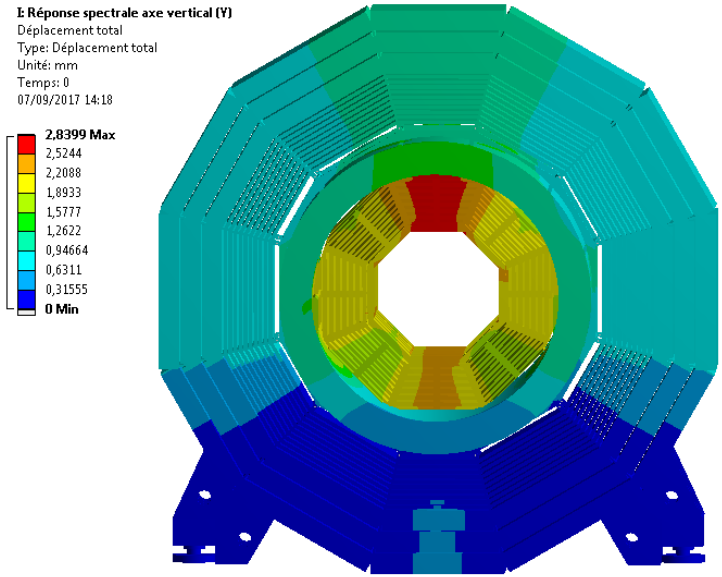

Maximum displacement: **2,9 mm**

Smallest gap between ECAL rings along z: **0,98 mm**

Smallest gap between ECAL module along phi: **2,05 mm**

The yoke ring offers a good resistance to side loading
No Z relative motion between ECAL modules too
(same complete barrel behaviour)

Summary

Gravity and Earthquake are the major environmental loads that need to be taken into account when designing instruments (to be installed in Japan) for dimensions, stresses impact and deformations.

Static and dynamic analysis are used to study the relative motion between ECAL modules of the barrel (clearances definition):

For gap ❶ : The behavior is dominated by static loads. Both geometries of HCAL are correct, if the initial gap is 2,5 mm, with a stiffer behavior for Videau case.

For gap ❷ : The variation of gap is dominated by seismic loads but not significant relative motion has been detected in response spectrum along the 3 main axis

<u>Next step:</u>

We have also to combine static and dynamic analysis in order to have the behavior as close as possible to the reality.