CERN/ARUP study, Linear Collider Study Task 1, June 2011 - March 2012

Task 1 - The development of a design concept for a platform that is compatible with both air-pad and roller movement systems to move two large detectors in and out of the beam line

Detector Movement System

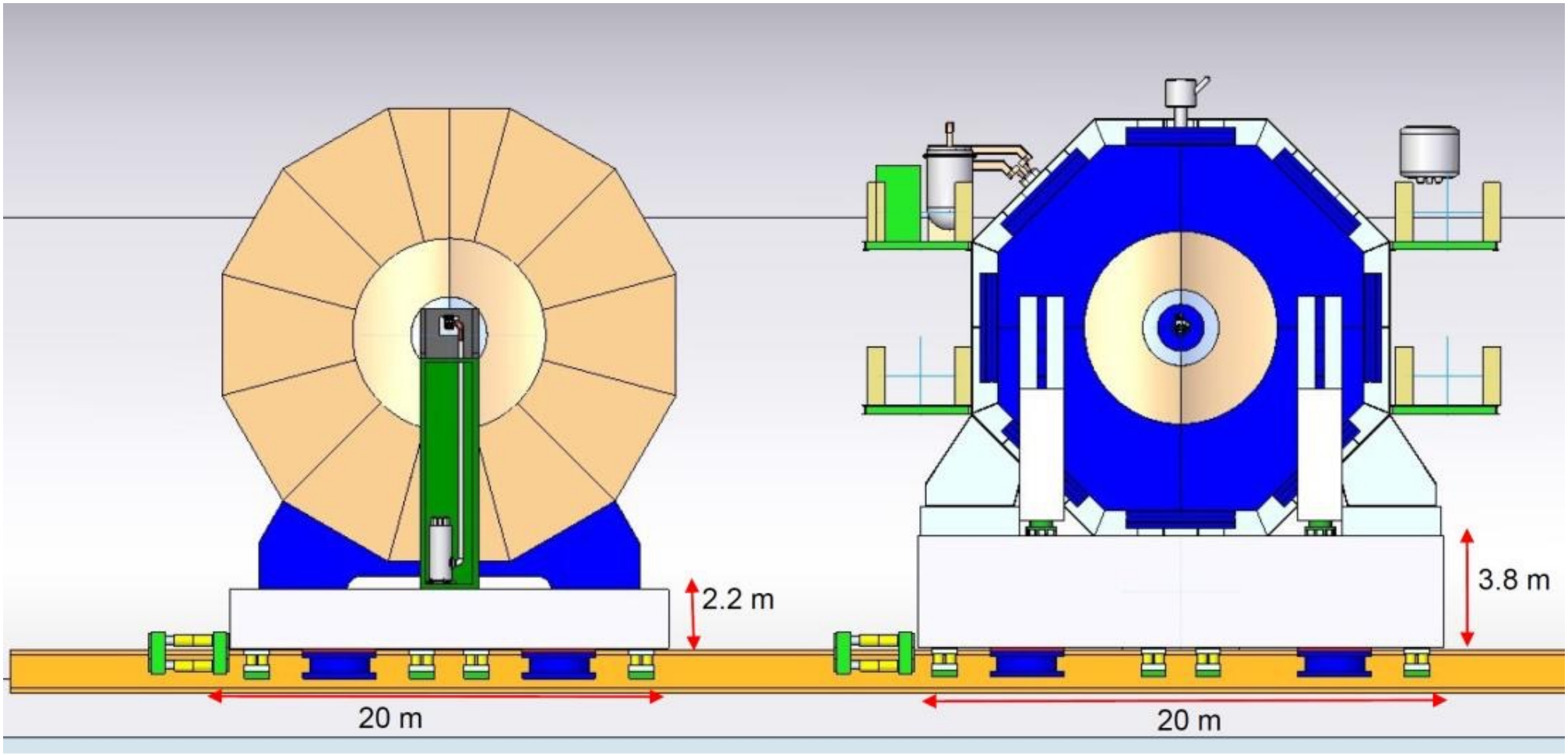

https://webservices.desy.de/edms/api/v4/downloads/MTIObjectHandle-0002-1~R~wdApiicadam--mpprdusrFTI~PdfFile~mpprdusr~~

4.1 Task 1 – Movement Platform

Platform Design Criteria		Value	Unit	Notes/assumptions
Detector		ILD		ILD is currently the most onerous system in terms of spatial and weight requirements
Detector Total Weight		15,500	tonnes	Fully installed weight including services and supply etc for movement to beam. It is assumed that additional weight is not added to the detector (and therefore the platform) once on the beam line, or at the garage
Detector Segment Weight	Door -Z	3,500	tonnes	An important design case for the platform will be when the detector is split for maintenance either on the beam line, or in the garage position. Weights provided by email (Oriunno-Osbourne 27th May 2011). The SiD and ILD have different combinations of slices when split. The worst loading case will be determined from the various combinations of ILD and SiD ring maintenance arrangements
	Barrel -1	2,500	tonnes	
	Barrel 0	3,500	tonnes	
	Barrel +1	2,500	tonnes	
	Door +Z	3,500	tonnes	
Slab Vibrations Modes	First Mode	20	Hz	Assumed feet and ground infinitely rigid with damping ratio of ~2%
	Further Modes			To be advised and informed by study, to include feet, invert slab and ground are expected to add compliance to the platform system
Magnetic field at top of platform		<1,000	gauss	It has been assumed that this is at the top of the platform
Operating Temperature Range		$20^{o}C \pm 2^{o}C$		

Platform Design Criteria (continued)		Value	Unit	Notes/assumptions
Movement System	Mechanism	Rollers or air pads		The platform design will be developed to be compatible with either roller or air pads. Should the design place any onerous performance requirement on one particular system this will be identified and where appropriate a mitigation measure identified. If a single platform design cannot service both systems clarification will be sought on the movement system to be used.
	Drive	Gripper jacks		
Platform	Concept	Single platform per detector		The design will be progressed on the basis that the two detectors are moved independently on separate platforms
	Material	Reinforced Concrete		A Steel support truss will not be considered further
	Footprint	20x20	m	
	Elevation	Study to confirm this		Beam to top of platform set by detector, platform depth below to be established during study. ILD to be used as greater beam to base distance (thinnest platform for same rail level)
Minimum distance between detectors		15	m	Minimum proximity of detectors at any location measured from exterior of iron

Platform Performance Requirement		Value	Unit	Notes/assumptions
Movement duration		5	hours	This is assumed to be the detector "speed" when travelling and would therefore not include preparation time to disconnect/connect detector or preparation of the movement system
Speed		>1	mm/s	(after acceleration). Assumed that the 5 hour requirement governs
Number of movements		10	$year^{-1}$	Assumed that both detectors will be moved an equal number of times
Limit of acceleration		0.05	g	This is a limit during movement
Maintenance allowances	On Beam	2	m	This is the between adjacent sections (end cap to centre section) when detector opened in the beam location
	In Garage	6	m	This is the between adjacent sections (end cap to centre section) when detector opened in the garage location
Static Deformation of platform		+-2	mm	In all locations, including during movement (as a single element or in sections)
Positioning relative to beam		+-1	mm	In relation to the beam location

Design Criteria

1. The slab is fixed at 20m x 20m on plan for the purpose of this concept design;
2. The distortion of the platform shall be limited to 2mm. Further details on the application of this limit have developed during the design period and these are described in further detail in section 5.1.1 below.
3. The first vibration mode of the platform should be in excess of 20Hz. However, during the project, a frequency of 16Hz was reported and in preference to increasing the thickness of the slab, this frequency was considered generally acceptable.
4. The acceleration of the detector should be limited to $0.5 m/s^2$ during the movement process.

Conclusions on the Structural Analysis of the Platforms

The following conclusion can be drawn from the structural analysis work reported in sections

1. The slabs can meet a distortion criteria of 1.2mm through the life. This, when coupled with the cavern invert distortion predictions of circa 0.8mm (see Section 4.6.5) will result in distortions of less than 2mm.

2. The modes of vibration of the unloaded slabs fall short of the 20Hz requirement of the initial Design Basis but this shortfall has generally been accepted in preference to increasing the thickness of the slabs.

3. The reinforcement quantities have been estimated to a level which is suitable for concept design.

Skid Options

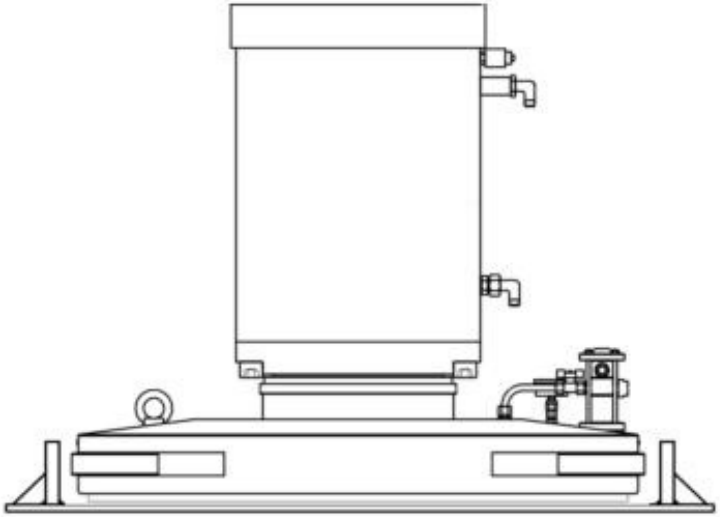

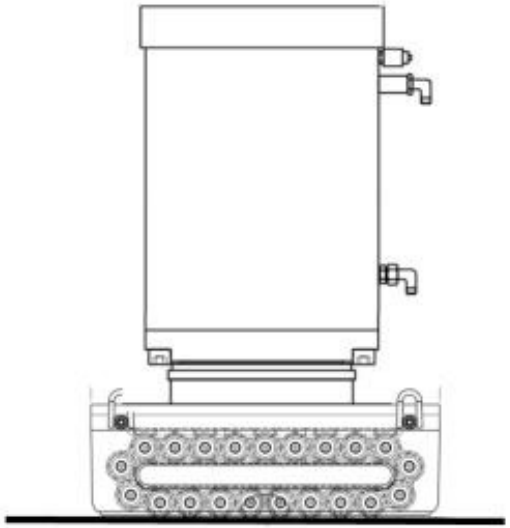

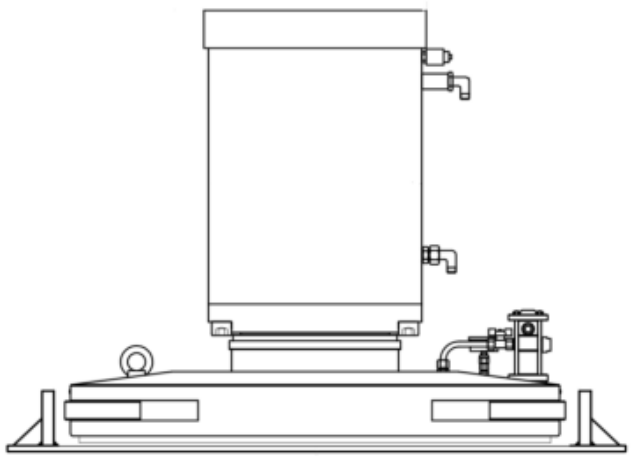

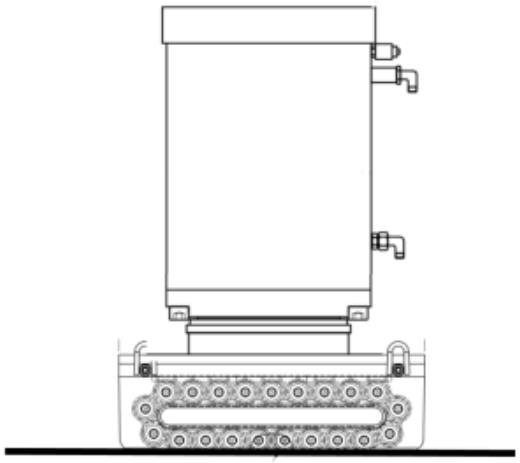

Pads	Rollers
Min 50 required	Min 18 required
No hardened track->can accommodate minor steps	Specialist hardened and flattened track
Design for 1% friction	Design for 3% friction
Pressure infrastructure	Larger propulsion infrastructure
Run-away	Higher friction ->less run-away
Extra complication of air system	

Figure 47: Layout for ILD on air pads

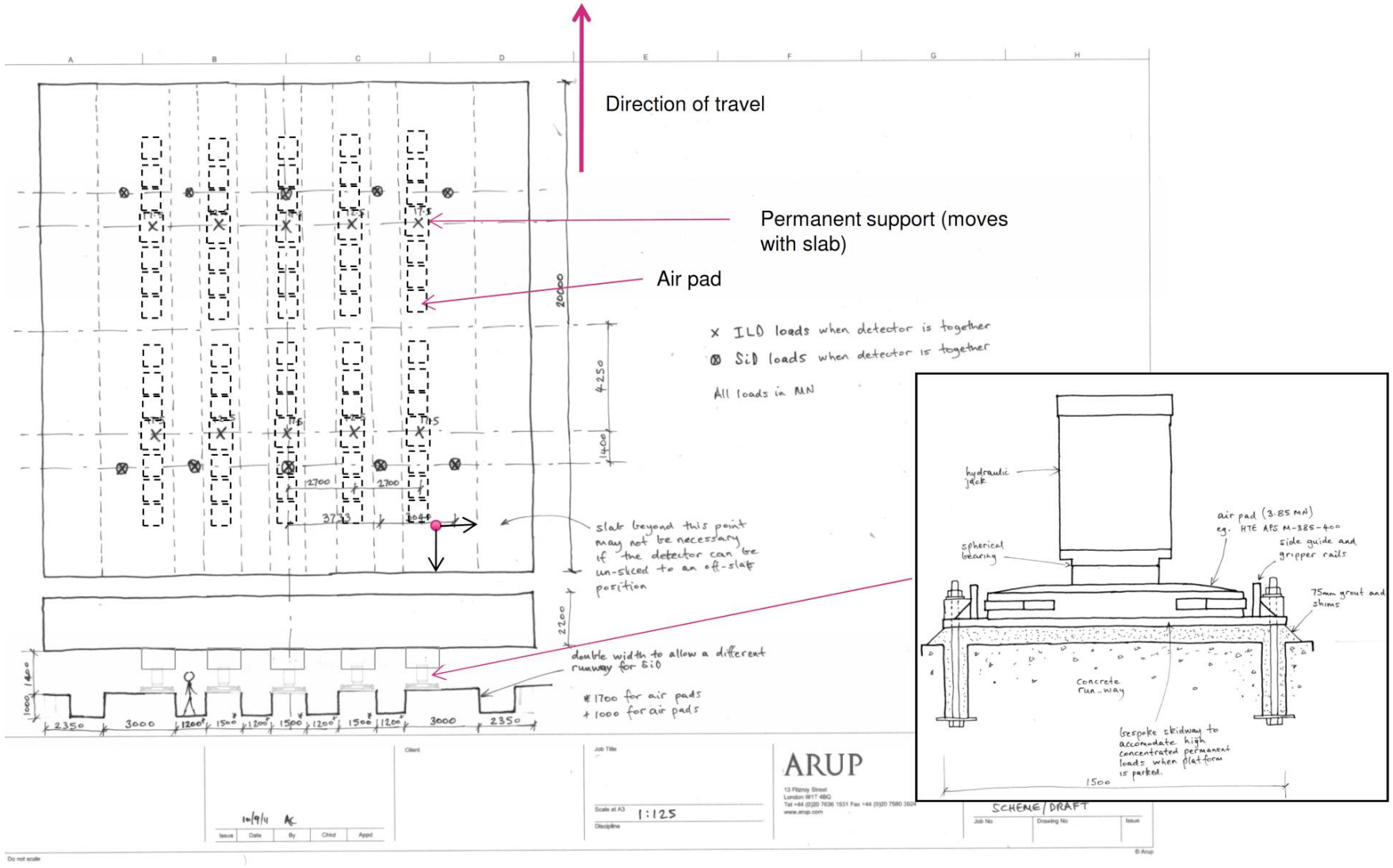

EDMS Nr.: D00000000983825 Rev: A Ver: 1 Status: Released - for preliminary publication Dat.: 27. Mar 2012

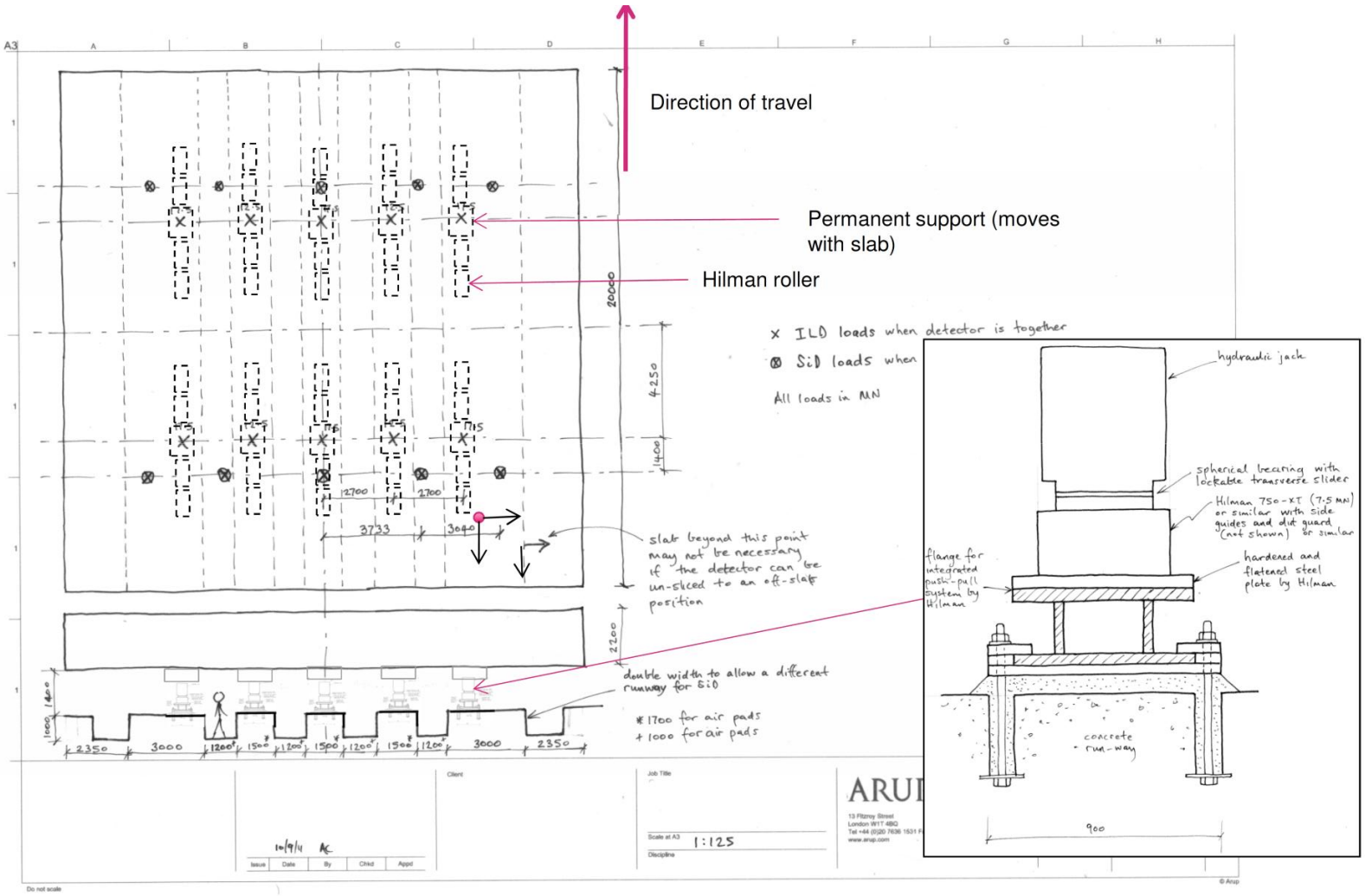

Figure 48: Layout of supports for ILD on roller

EDMS Nr.: D00000000983825 Rev: A Ver: 1 Status: Released - for preliminary publication Dat.: 27. Mar 2012

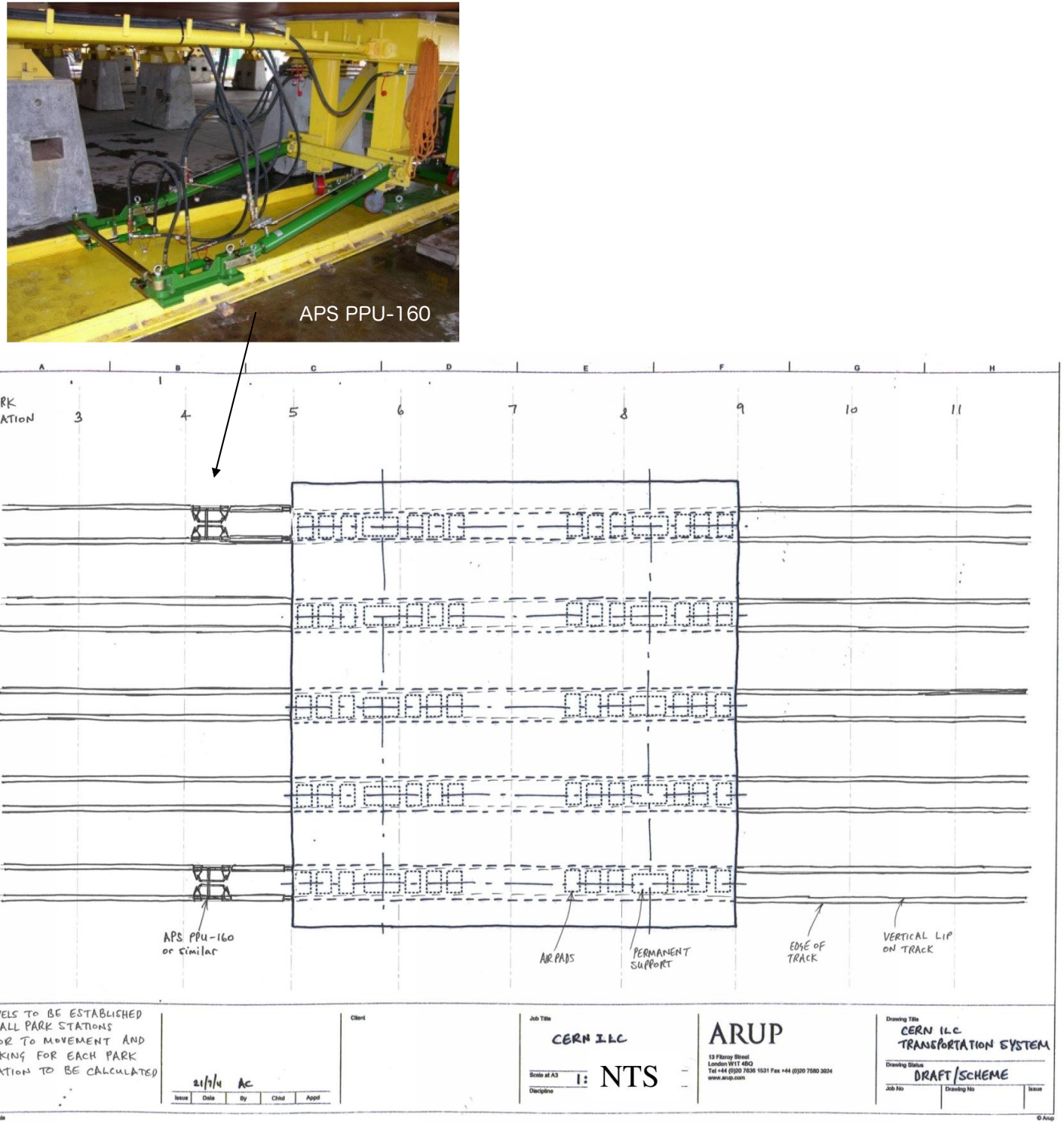

Figure 51: Plan view of the push pull system

Final Positioning

For lateral (y) adjustment system,

If the skids are air pads, the friction will be less than 1% and it is unlikely that such a movement would introduce significant accelerations into the slab. Hilman rollers permit lateral movement by using a lateral PTFE slider which will have a higher friction coefficient than the air pads (maybe 5%) and this may cause lateral acceleration of the platform to exceed the allowable value of $0.5 m/s^2$ if there is a significant change in static to dynamic coefficient of friction. To validate this methodology would require the following:

1. Establish if $0.05 m/s^2$ acceleration is a real limit (we understand that this limit has come from previous transportation measurements of $0.1 m/s^2$, divided by a factor of 2).
2. Establish a frequency cut off for which the limit should apply.
3. Test PTFE to find a suitable admixture to get the minimum ratio of static to dynamic friction.

If these tests demonstrate a high ratio of static to dynamic friction, then lateral movement could still be achieved without violating the acceleration limits, but it would require a stiffer lateral adjustment system.

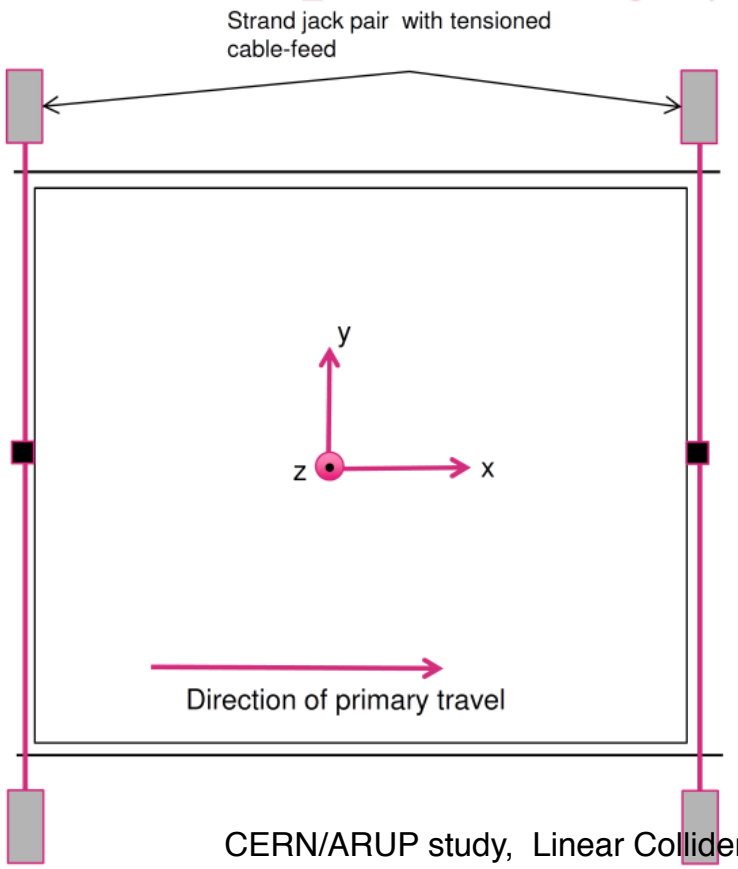

Degree of freedom	Methodology
x, Rzz	Push pull system
z, Rxx, Ryy	Pack adjustment under slab
y (air-pads) *illustrated*	Lateral pull with strand jacks whilst air pads are active
y (rollers) *illustrated*	Lateral pull with strand jacks whilst the lateral slider (on the roller) is un-locked

Note, Rxx is rotation about the x-axis, etc