ILC Dominant Technologies

Introduction of ILC Accelerator Technologies for Industry

H. Hayano (KEK) *10.30.2019 LCWS2019 Sendai*

Configulation of ILC Accelerator

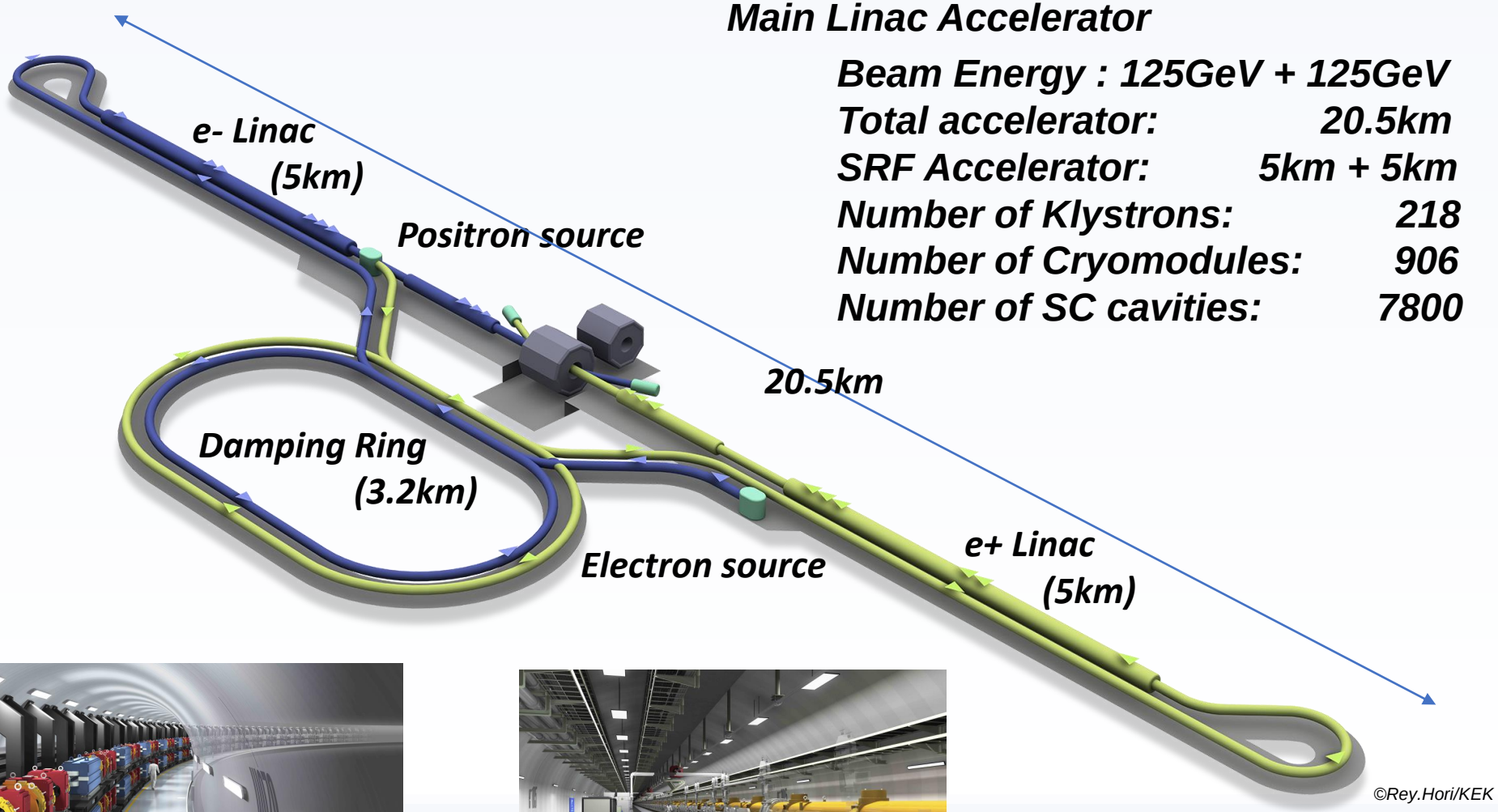

Main Linac Accelerator

Beam Energy :	125GeV + 125GeV
Total accelerator:	20.5km
SRF Accelerator:	5km + 5km
Number of Klystrons:	218
Number of Cryomodules:	906
Number of SC cavities:	7800

Damping Ring

e+, e- Main Linac

Beam Acceleration Sequence

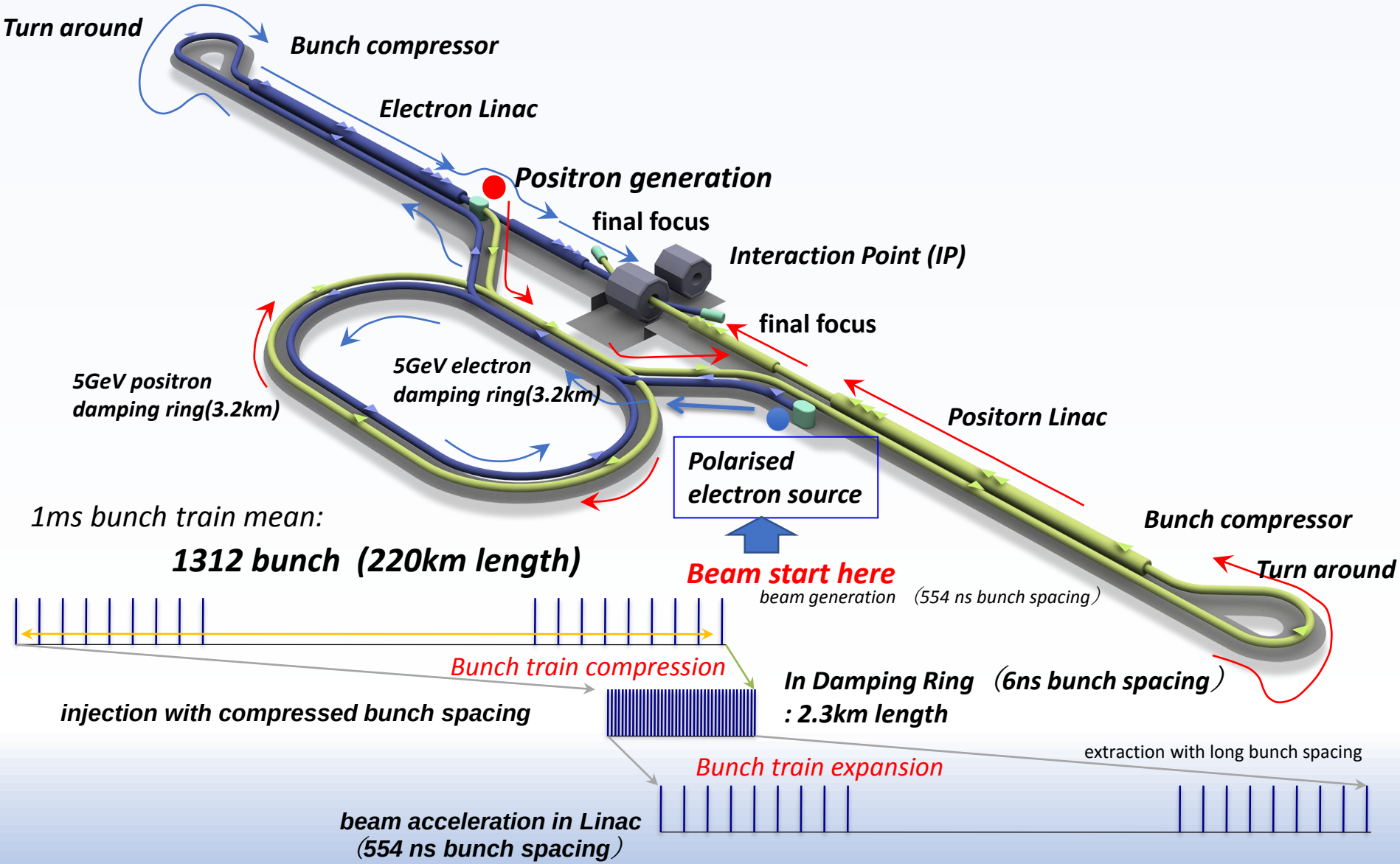

ILC Accelerator real arrangement

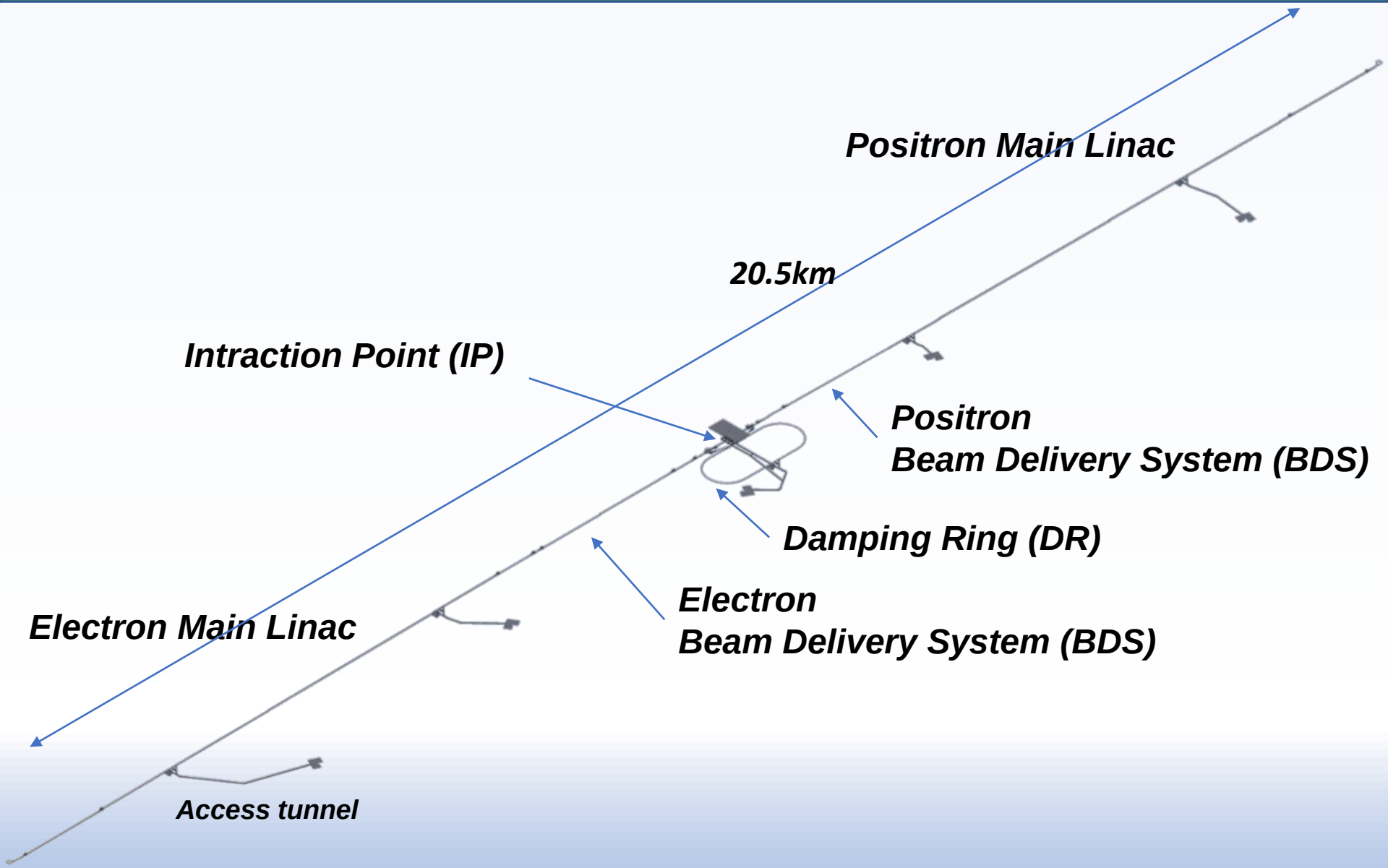

This bird's eye view looks from West

ILC Accelerator fitted to Kitakami candidate site

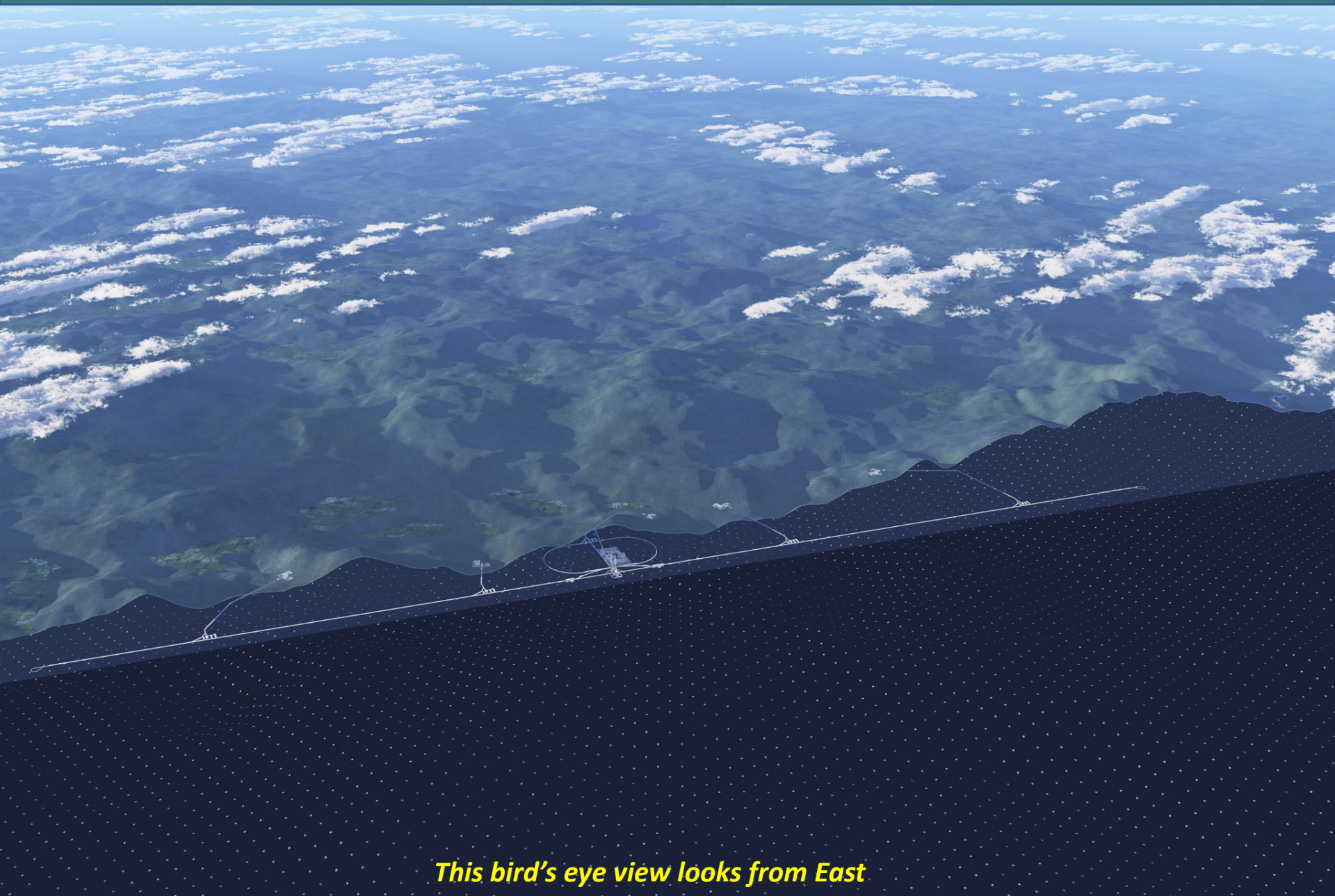

This bird's eye view looks from East

Main Linac RF system

Number of Klystrons:	***218***
Number of Cryomodules:	***906***
Number of SC cavities:	***7800***

Basic RF unit of main Linac

Number of Main Linac RF Unit = 218

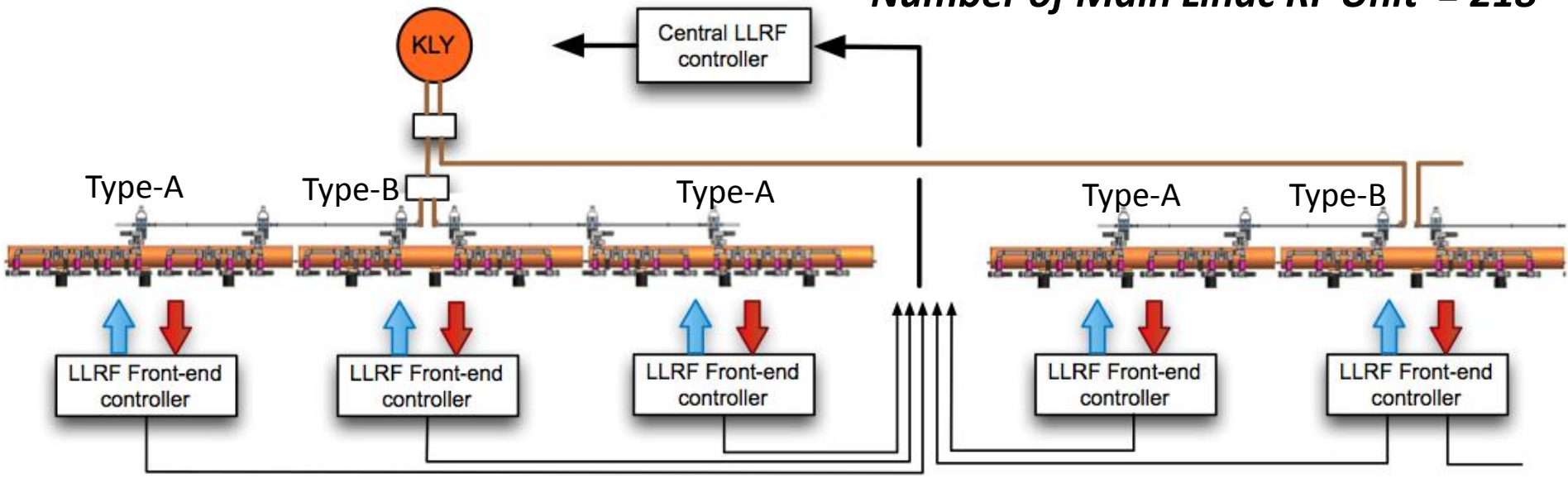

RF unit consist of

- ***10MW Klystron 1***
- ***Marx Modulator 1***
- ***Local RF power distribution system 4.5***
- ***Cryomodule 4.5***
- ***Superconducting cavity 39***
- ***Superconducting Qudrapole magnet 1.5***
- ***Digital LLRF control unit 1***

Tunnel layout of Main Linac

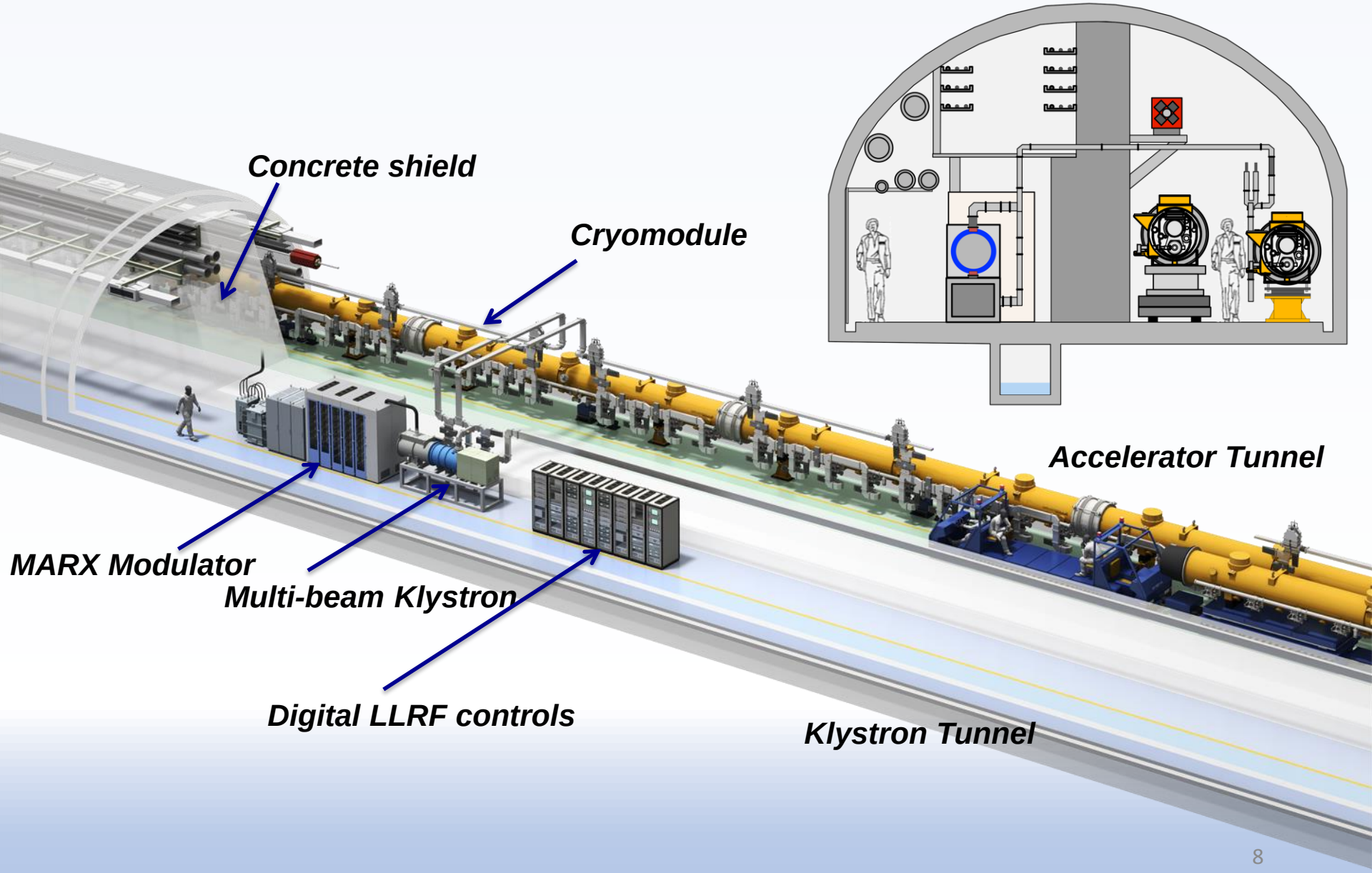

©Rey.Hori/KEK

Cryomodule

Number of Cryomodule = 906

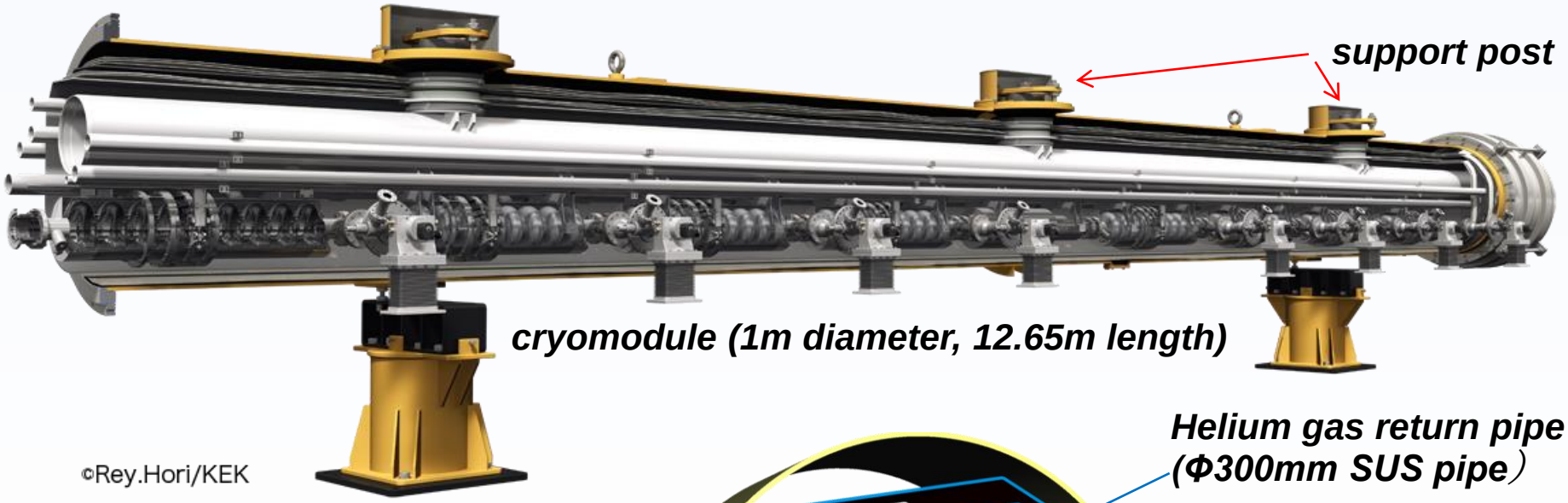

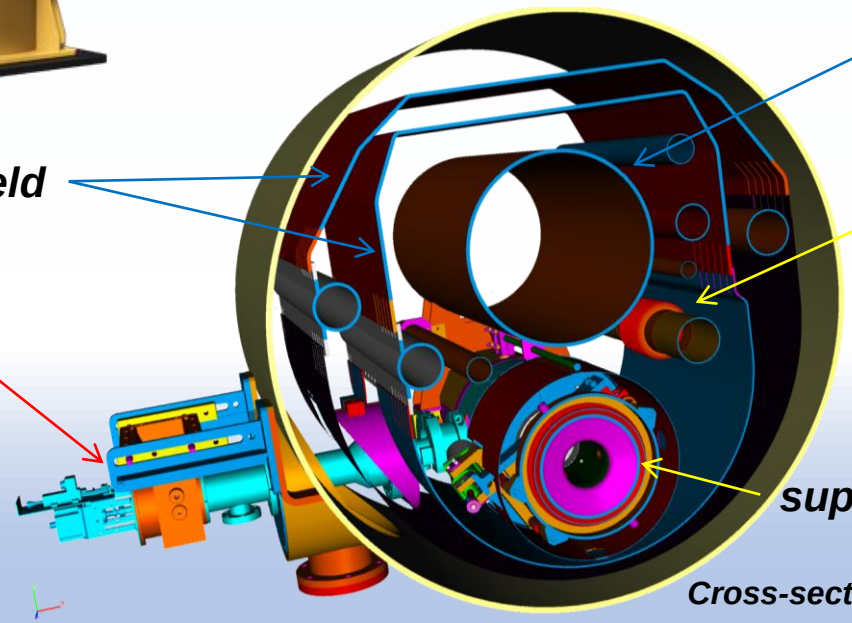

Cross-section from D. Kostin

Superconducting RF Cavity package

Number of Cavity Package = 7800

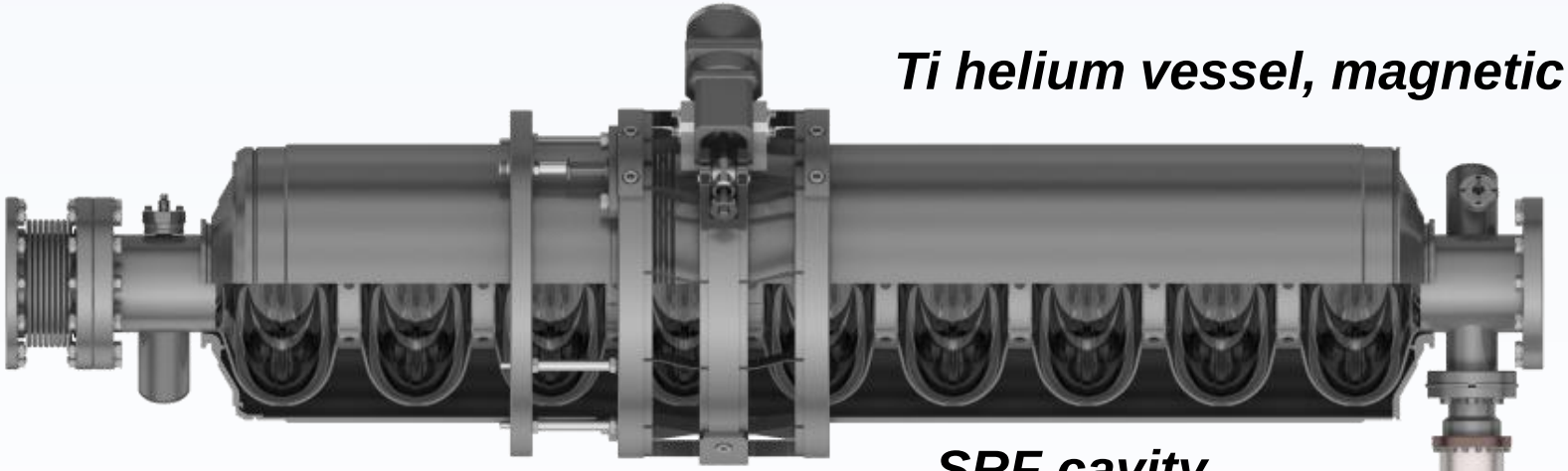

Picture of Superconducting RF Cavity (length 1.2m, diameter 0.2m)
Cooled down at temperature 2K, then become superconducting state.

Technologies for high performance SRF cavity

Press

EBW

Inner surface inspection camera

Cavity frequency tuning

Cryomodule assembly

Clean Room

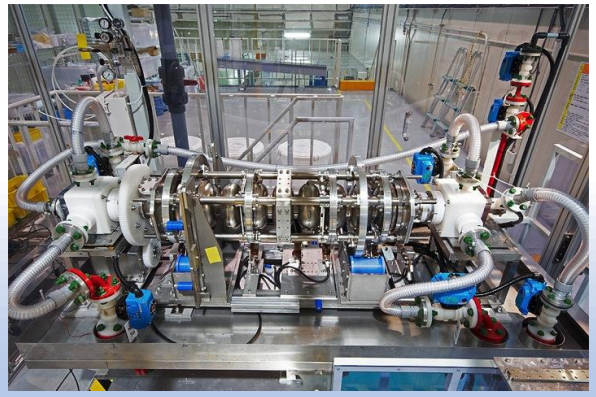

EP (Chemistry)

Cavity package : Frequency Tuner

Cavity Resonant Frequency Tuning Mechanism : Tuner 7800

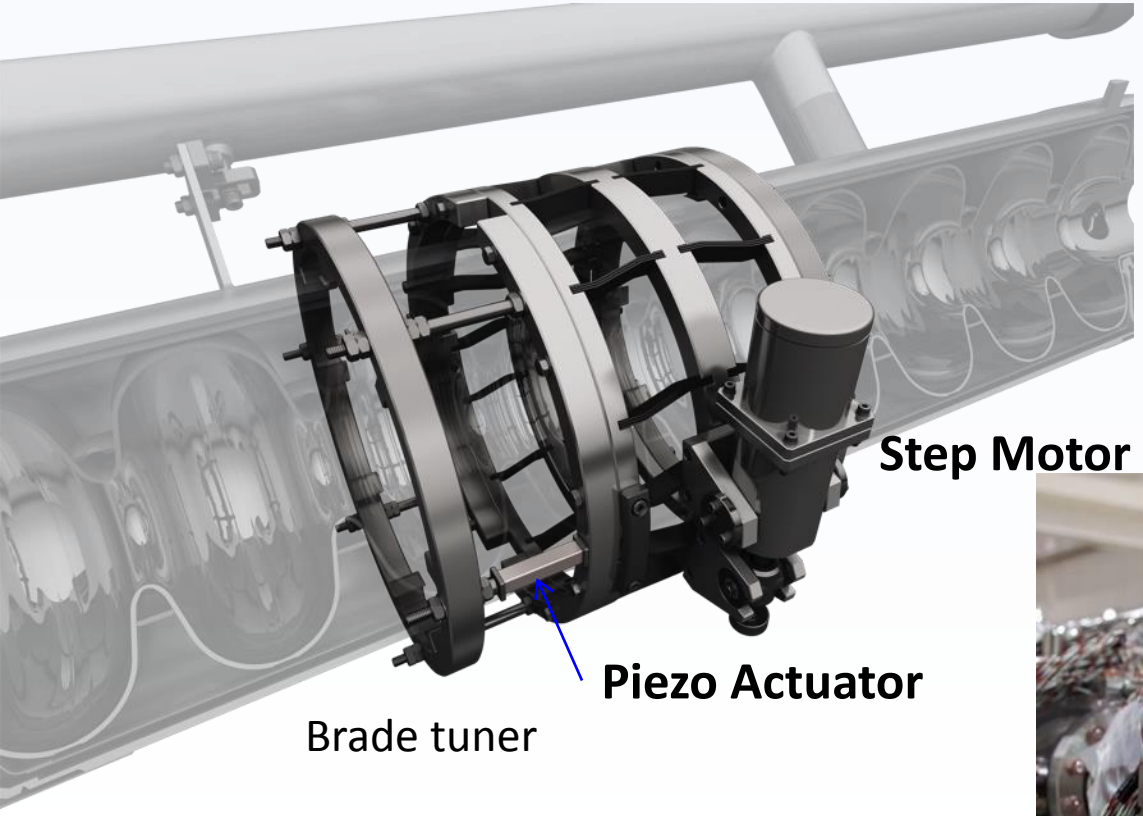

Location: middle of He vessel
Motor: inside of module,
low temperature
Piezo: two low-voltage piezo

Design Stiffness: 30kN/mm
Nominal sensitivity: 1.5Hz/step
Piezo stroke at RM: 55 µm

Cavity package : Input Coupler

Cavity Input Coupler 7800

Transmit only RF power from room-temperature to 2K, but no heat conduction.

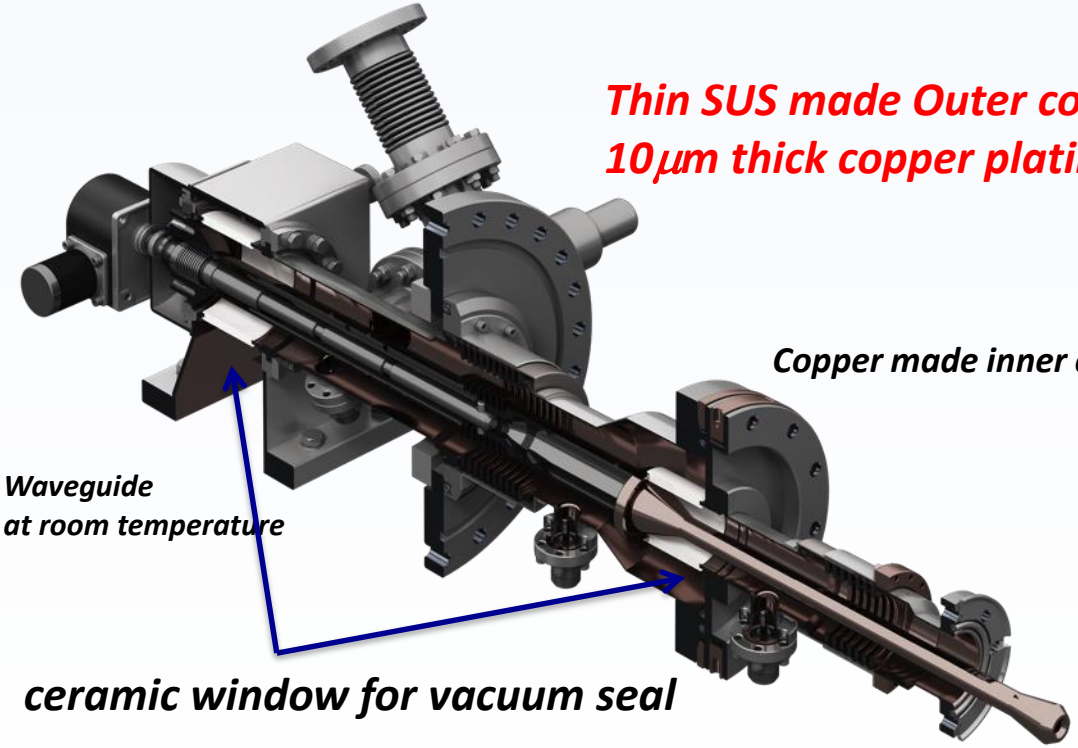

TTF III coupler (TDR coupler)

Type: coaxial to antenna
Window: two cylindrical,
cold window & warm window
Coupling: tunable
Interface: 40mm dia. cavity port
WR650 for waveguide
Power: 350kW, 1.5ms, 5Hz

Input Coupler puts Pulse RF power into SC-Cavity

Generation of Pulsed RF power: klystron

10MW, 1.65ms pulse-width, 10Hz repetition Multi-Beam-Klystron : 218

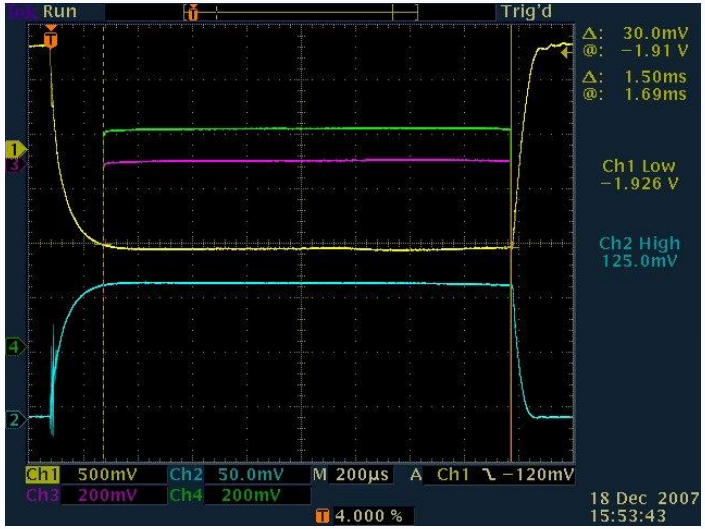

Parameter	Specification
Frequency	1.3 GHz
Peak power output	10 MW
RF pulse width	1.65 ms
Repetition rate	5.0 (10) Hz
Average power output (5 Hz)	82.5 kW
Efficiency	65 %
Saturated gain	> 47 dB
Instantaneous 1 dB BW	> 3 MHz
Cathode voltage	> 120 kV
Cathode current	< 140 A
Filament voltage	9 V
Filament current	50 A
Power asymmetry (between two output windows)	< 1 %
Lifetime	> 40,000 hours

Scope waveform of the klystron test.
The traces show the klystron voltage (116 kV) in yellow, the current (128 A) in blue
and RF output (5 MW each) in magenta and green.

10MW 1.65ms Pulse
65% efficiency

Toshiba
E3736H

Multi-beam Klystron inside

Microwave is amplified by the klystron. In klystron, microwave cavity is used to modulate the beam velocity by small power.
Modulated beam reach to its maximum bunching at the output cavity, and generate high power microwave.

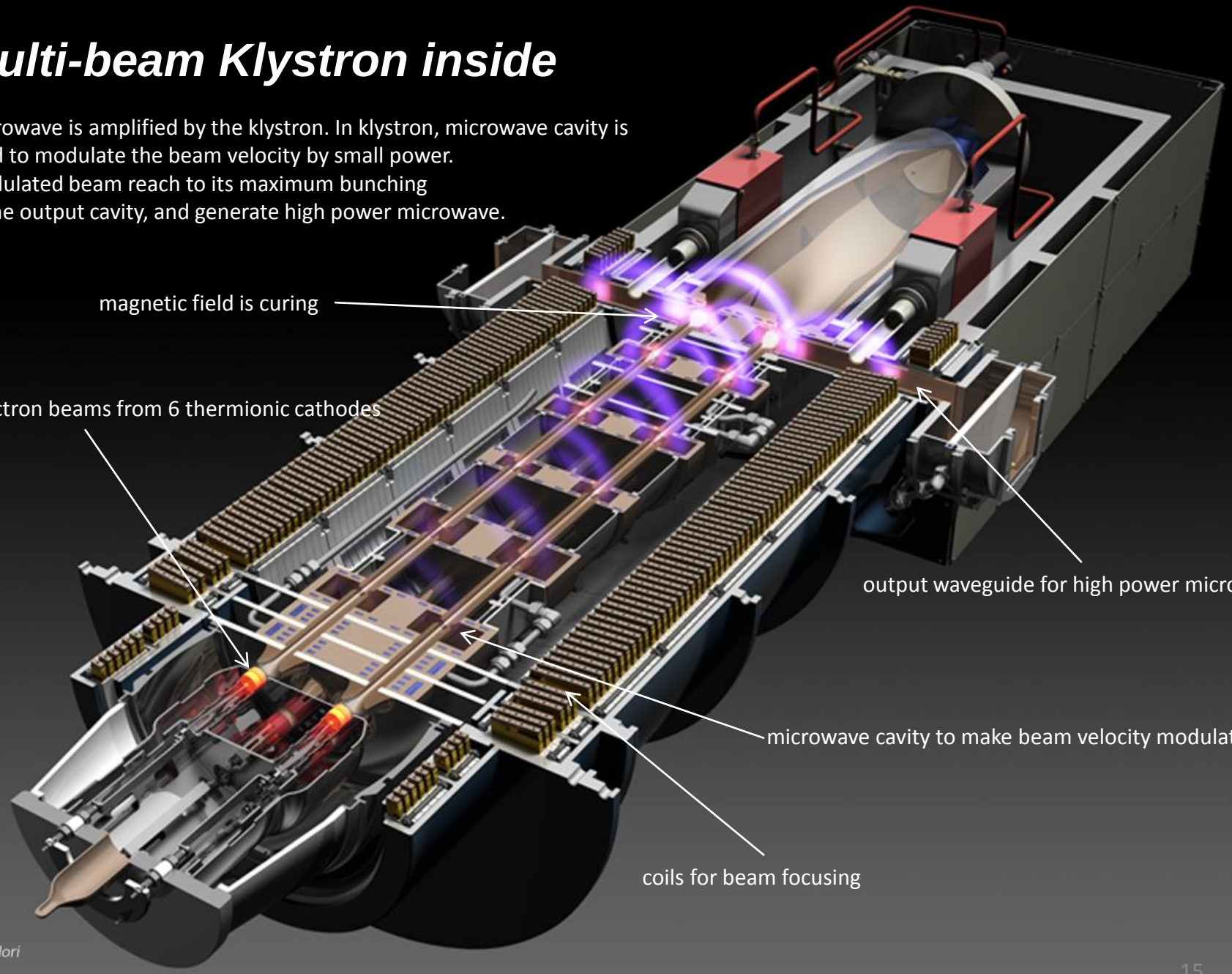

Marx Modulator (Klystron power supply)

Parameter	Unit	Specification
Output voltage	kV	120
Output current	A	140
Pulse width	ms	1.65
Pulse repetition frequency	Hz	5 (10)
Max. average power	kW	139
Output pulse flat-top	%	±0.5
Pulse-to-pulse voltage fluctuation	%	±0.5
Energy deposited into klystron during a gun spark	J	< 20

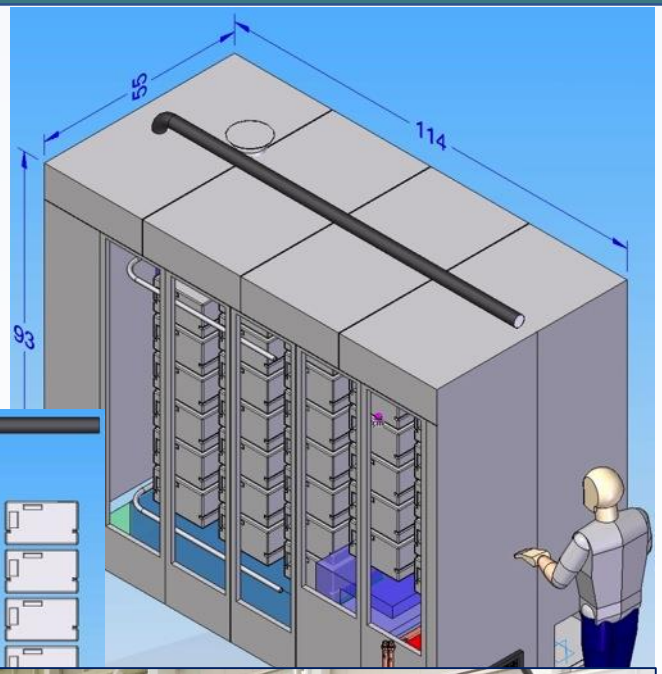

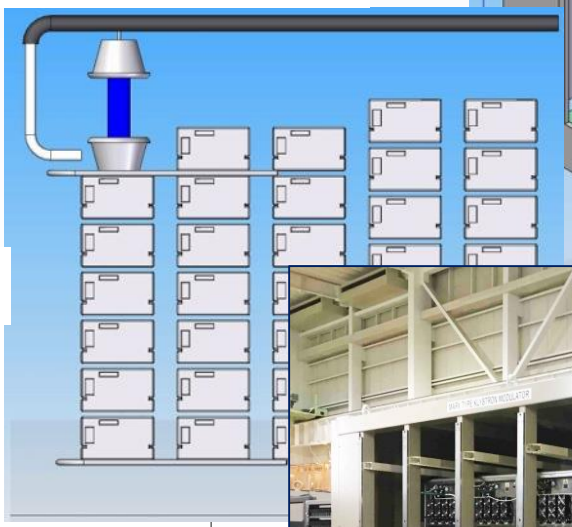

Generation of 120kV, 140A, 1.65ms Pulsed Voltage combined by 20 MARX-CELL units.
Parallel charging and sirial discharging.

Accelerator Laboratory

Principle of MARX-cell work

- Classic Marx circuit（1923年　Erwin Marxによる発明）

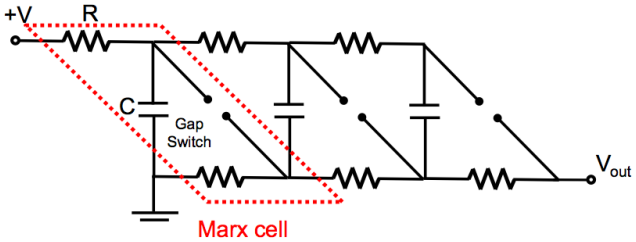

- Solid state Marx circuit（2000年 A. Krasnykh）

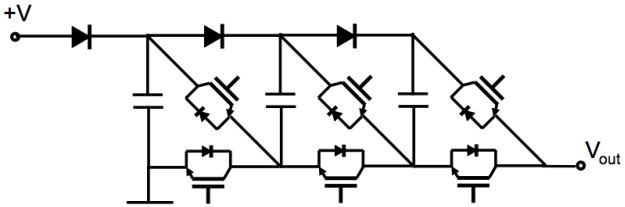

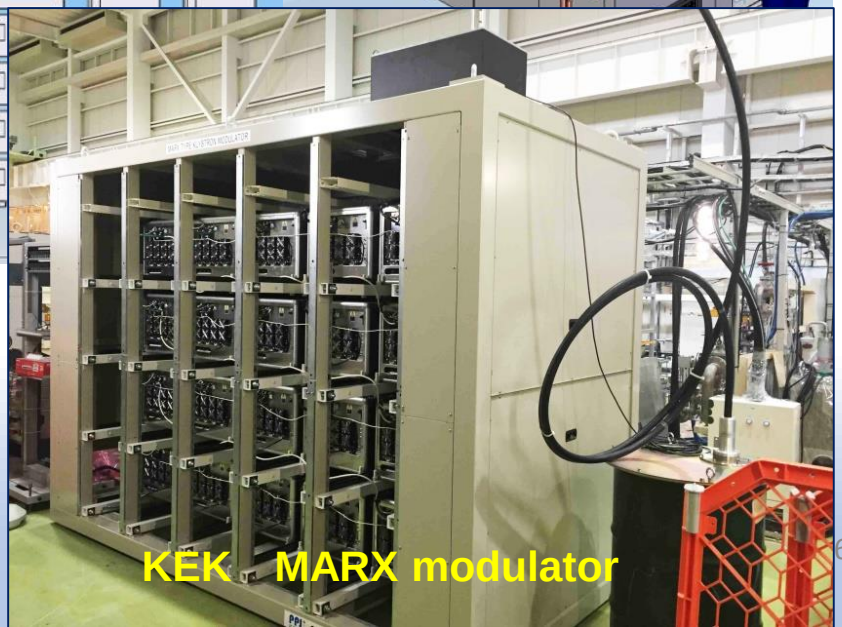

Local RF Power Distribution System

Operation gradient 31.5MV/m +/- 20% -> It allows variety of cavity performance.
To extract maximum total gradient, variation of power and phase adjustment are required.

1 RF unit use;

circulator	39
Bellow WG	39
E-bend WG	60
Phase-shifter	39
Variable ratio-Hybrid	30
High-power-divider	11
RF load	82
4m streight WG	30
Total	330

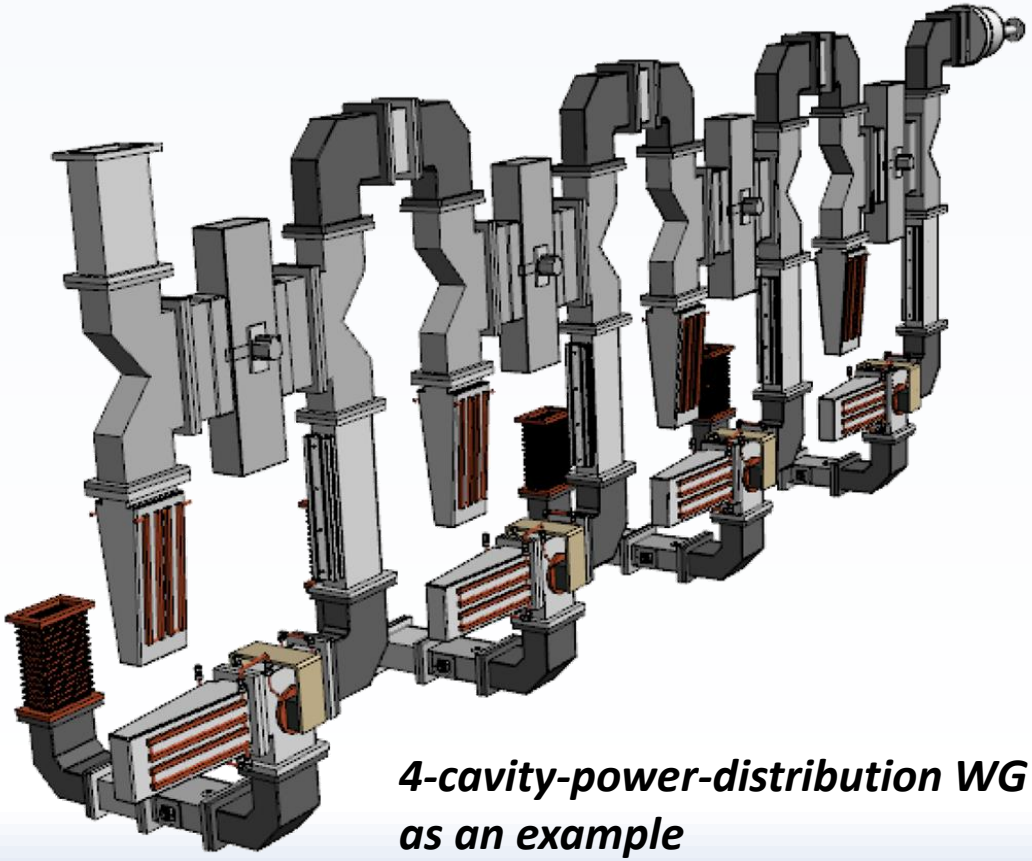

4-cavity-power-distribution WG as an example

ILC250 use 218 RF units --> total 71940 WG-components

RF Amplitude & Phase stabilization by digital feedback

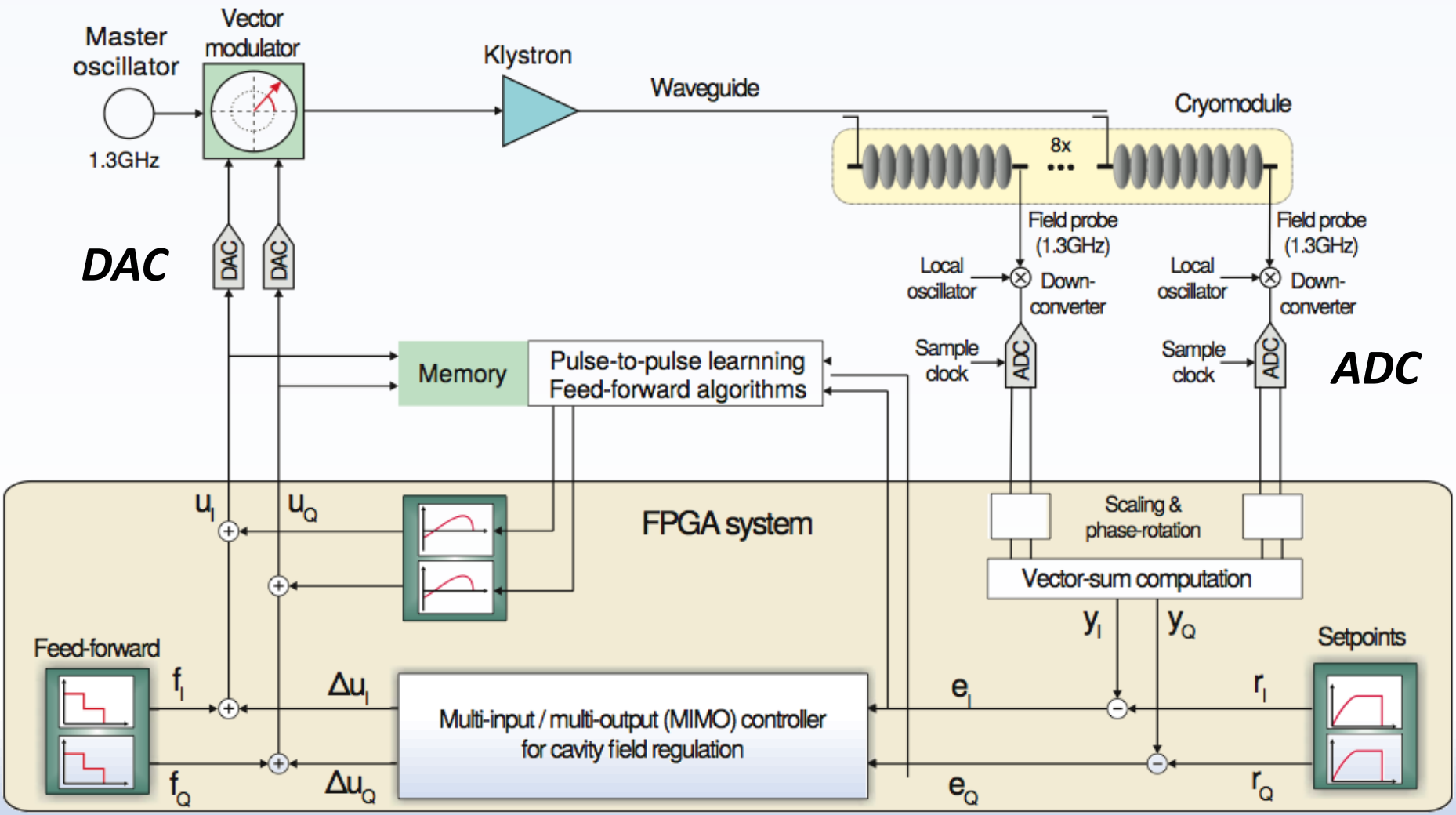

FPGA calculate error amount, and feed them back to the klystron input.

Stabilized RF amplitude and phase

Vector sum operation of 7 cavities with LLRF control as an example

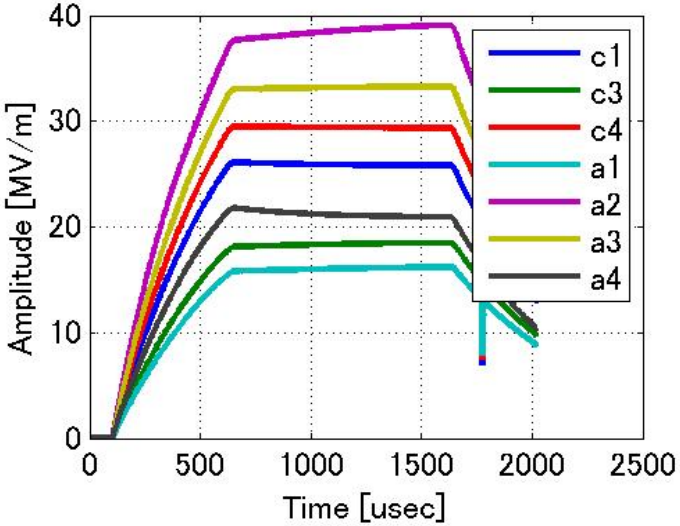

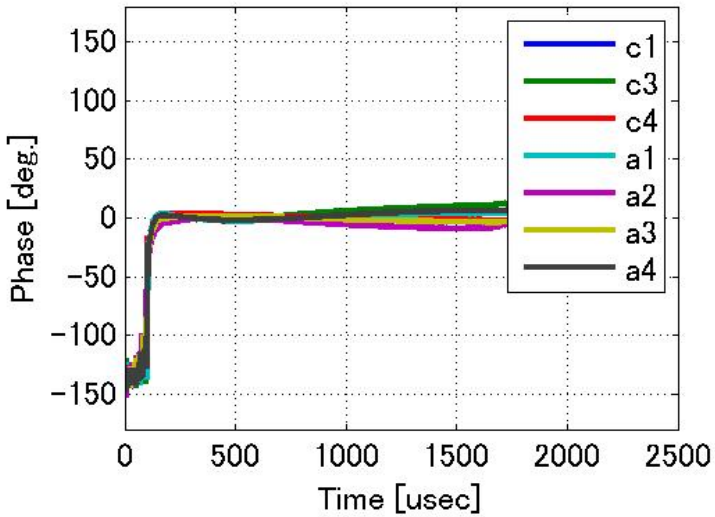

Amplitude stability 0.005%.rms

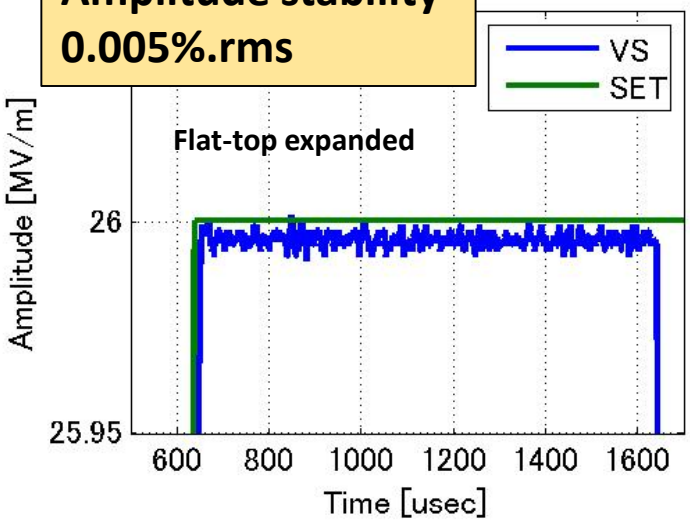

Phase stability 0.015° .rms

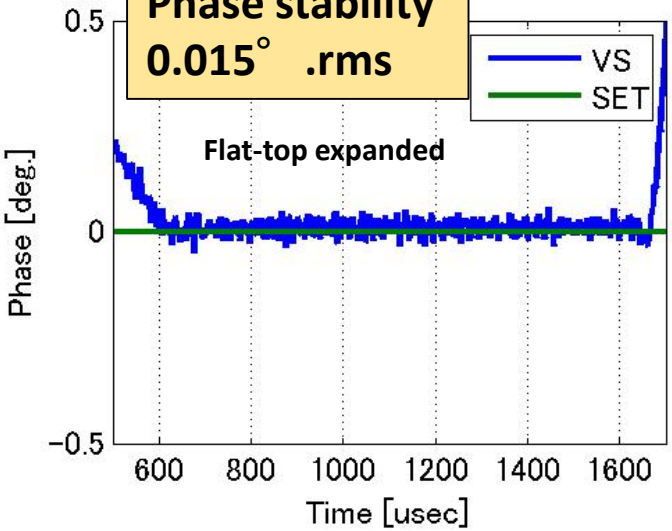

Replace klystron by Solid-state-power-amplifier?

There is an information that high power transister will be available soon. Then,
If 200kW-pulse solid-state-amplifier is developed,
solid-state-amplifier for each cavity drive
is worthwhile to think about.

10MW Klystron	**218**
Marx Modulator	**218**
Local RF power distribution	**71940**

cost?

Which is cost-effective?

200kW-pulse solid-state-amp	**7800**
bellows+CT WG for input coupler	**7800**

cost?

(need upgradable upto 350kW-pulse)

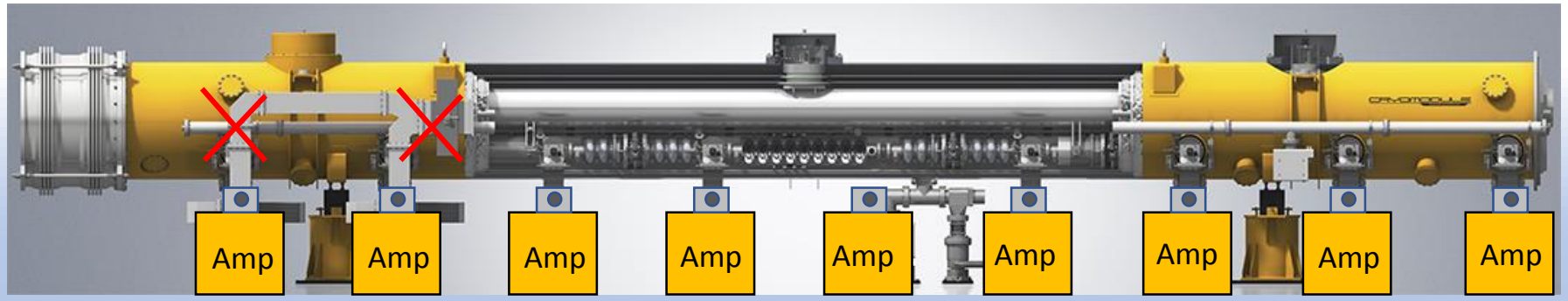

Magnets

Total number of Magnet = about 7000 are required,
Support stages are also required.

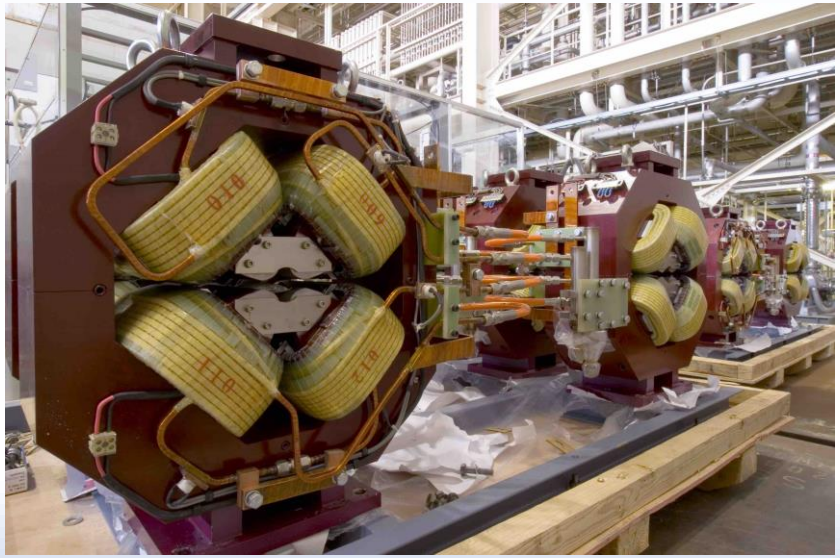

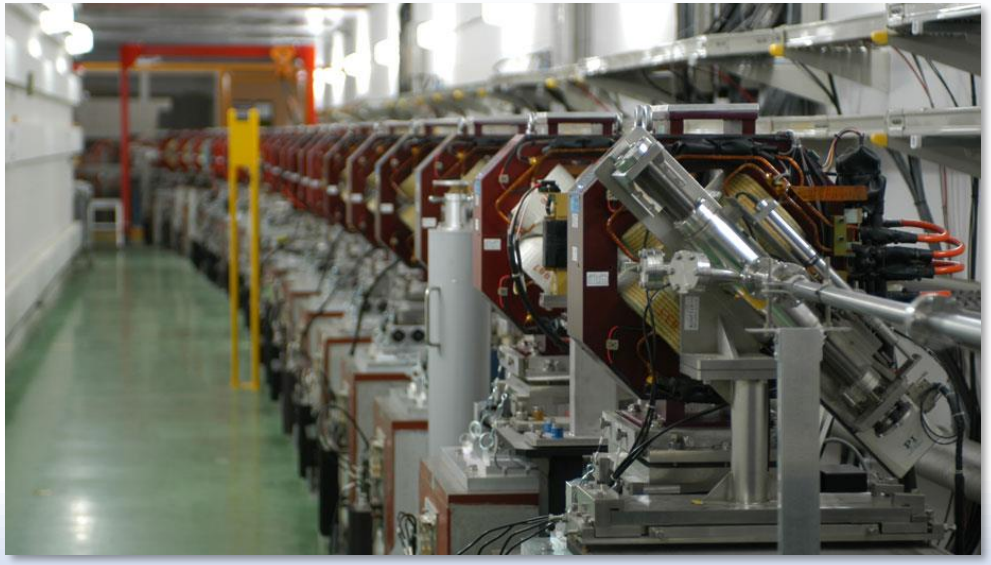

ATF2 magnet supplied by IHEP(China)

Required Number of Magnets in DR

Damping Ring

magnets : 3818

Dipoles-Corrector	600	2rings	60kg	200mm	200mm	300mm
Dipoles-Arc	300	2rings	4500kg	3000mm	500mm	400mm
Dipole-straight (2m)	16	2rings	3000kg	2000mm	500mm	400mm
Dipole-straight (1m)	56	2rings	1500kg	1000mm	500mm	400mm
Quadrupoles-Arc	900	2rings	900kg	600mm	460mm	460mm
Quadrupoles-Straight	426	2rings	450kg	300mm	460mm	460mm
Skew Quads-Corrector	320	2rings	300kg	200mm	460mm	460mm
Sextupoles	1,200	2rings	450kg	300mm	460mm	460mm

Required Number of Magnets in RTML *(Ring-To-Main-Linac)*

RTML

magnets : 2400

Bends	356	Electron side	3500kg	2300mm	500mm	400mm
	336	Positron side	3500kg	2300mm	500mm	400mm
Quads	825	Electron side	200kg	200mm	400mm	400mm
	793	Positron side	200kg	200mm	400mm	400mm
Corrector Dipoles	1,229	Electron side	30kg	100mm	200mm	300mm
	1,157	Positron side	30kg	100mm	200mm	300mm
Kickers	18					
Septa	14					
Pulsed bends	3					
Extr. Bends	12					
Rasters	6					
Solenoids	4					

Half of this in ILC250

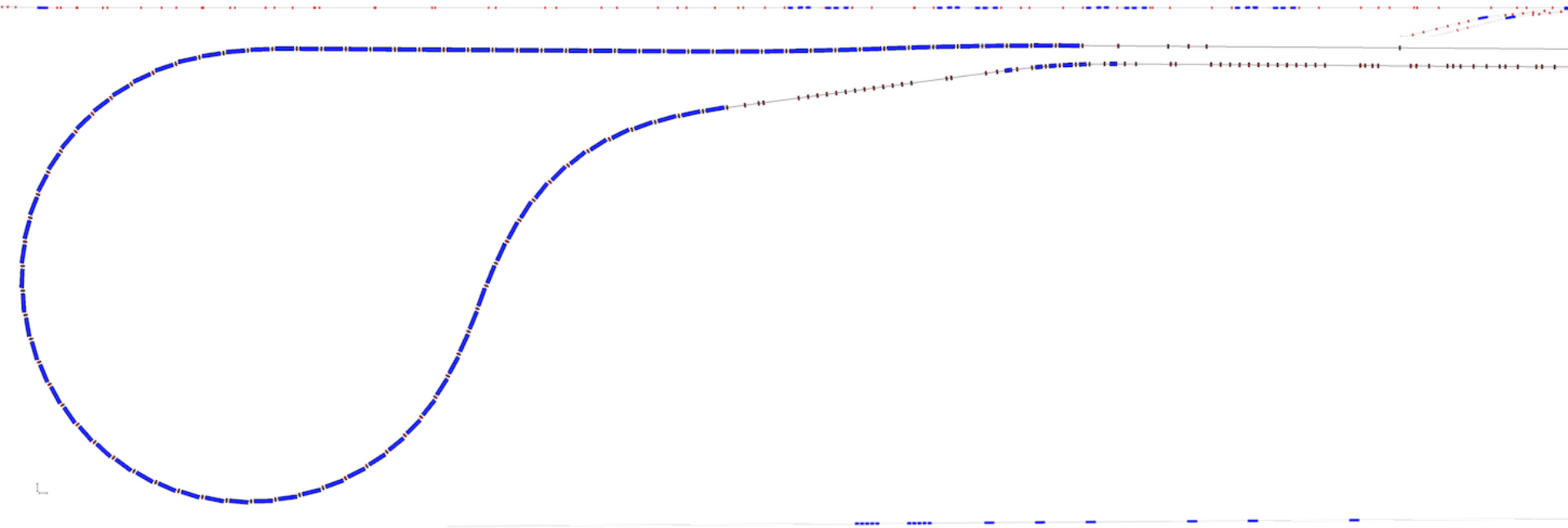

Required Number of Magnets in BDS *(Beam-Delivery-System)*

BDS

magnets : 732

Warm dipoles	134	2 BDS beam lines	2700kg	3800mm	300mm	300mm
Warm dipoles	20	2 BDS beam lines	3000kg	2000mm	500mm	400mm
Warm dipoles	16	Electron dogleg	4500kg	3000mm	500mm	400mm
Warm dipoles	8	2 EXT beamlines	3000kg	2000mm	500mm	400mm
Warm quads (2.0m-long)	82	2 BDS beam lines	2000kg	2000mm	400mm	400mm
Warm quads (1.5m-long)	52	2 BDS beam lines	1500kg	1500mm	400mm	400mm
Warm quads (1.0m-long)	20	2 BDS beam lines	1000kg	1000mm	400mm	400mm
Warm quads (wide)	24	2 BDS beam lines	3000kg	2000mm	500mm	500mm
Warm quads	54	Electron dogleg & undulator	2000kg	2000mm	400mm	400mm
EXT quads (84mm dia.)	10	2 EXT beamlines	5000kg	2000mm	600mm	600mm
EXT quads (92mm dia.)	2	2 EXT beamlines	6000kg	2000mm	650mm	650mm
EXT quads (104mm dia.)	2	2 EXT beamlines	8000kg	2000mm	750mm	750mm
EXT quads (124mm dia.)	2	2 EXT beamlines	10000kg	2000mm	850mm	850mm
EXT quads (142mm dia.)	2	2 EXT beamlines	13000kg	2000mm	950mm	950mm
EXT quads (170mm dia.)	8	2 EXT beamlines	15000kg	2000mm	1000mm	1000mm
Warm sextupoles	14	2 BDS beam lines	1000kg	1000mm	460mm	460mm
Warm correctors	148	2 BDS beam lines	30kg	100mm	200mm	300mm
Septums	20		200kg	2000mm	100mm	150mm
Pulse bends	10		3000kg	2000mm	500mm	400mm
SC quads	32					
SC sextupoles	12					
SC octupoles	14					
SC correctors	36					
Muon spoilers	10					

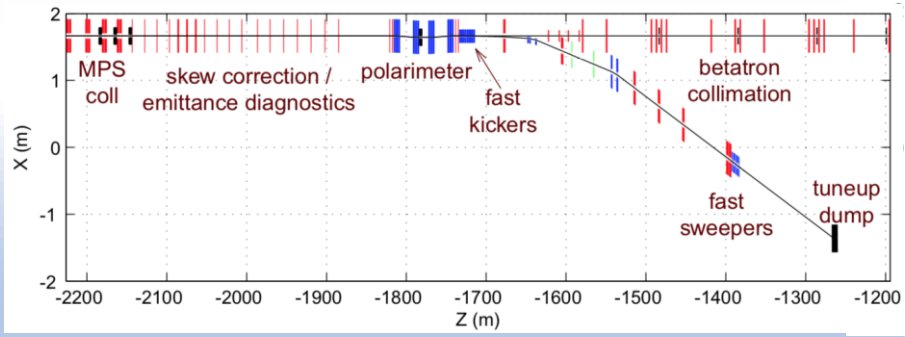

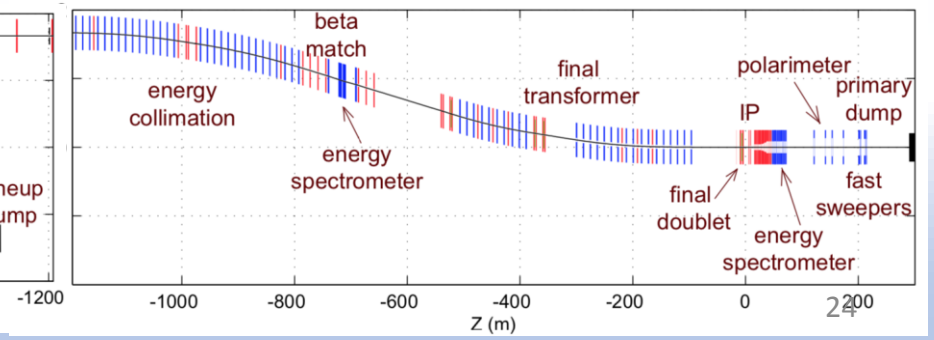

Magnet Power Supply

Total number of Magnet PS = about 7000 are required

Required Number of Magnets Power Supply

electron source, injector

Bend power supply :	27
NC Q-magnet PS :	158
SC Q-magnet PS (inside cryomodule) :	16
NC Solenoid PS :	12
SC Solenoid PS :	2
SC corrector Mag PS (inside cryomodule) :	32

total 247

RTML for electron and positron

Bend Power Supply :	336+356 =	692/2 =	346
NC Q-magnet PS :	825+793=	1618/2=	809
NC corrector mag PS :	1129+1157=	2386/2=	1193
Kicker PS :			18
Septum Mag PS :			14
Pulse Bend Mag PS :			3
Extraction Bend Mag PS :			12
Laster PS :			6
Solenoid Mag PS :			4

total 2405

Required Number of Magnets Power Supply

Damping Ring (electron DR + positron DR)

Bend magnet PS : (150 magnet series + 150 magnet series)	2
Bend magnet PS : (28 magnet series + 28 magnet series)	2
Bend magnet PS : (10 magnet series + 10 magnet series)	2
NC Q-magnet PS :	683 + 683 = 1366
NC Skew Q-mag PS :	158 + 158 = 316
NC Sextapole-mag PS :	600 + 600 = 1200
SC wiggler-mag PS :	54 + 54 = 108
NC corrector-mag PS :	304 + 304 = 608
Kicker PS :	42 + 42 = 84
Septum PS :	4 + 4 = 8

Total 3696

BDS (electron BDS + positron BDS)

Bend magnet PS :	190
NC Q-magnet PS :	204
NC Sextapole Q-mag PS :	10
NC Octapole Q-mag PS :	4
SC Q-mag PS :	32
SC Sextapole-mag PS :	12
SC Octapole-mag PS :	14
NC corrector-mag PS :	64
SC corrector-mag PS :	36
Kicker&Septum PS :	64

Total 630

Use of permanent magnet for 5 GeV-transport line?

For Beam lines between Damping Ring and Main Linac (RTML), beam energy is 5GeV fixed, total length is 20km transport line, sparse magnet interval, 2.75m high from ML-tunnel floor.

There is possibility to use permanent Quadrupole, permanent bend, because no-high-current cable connection, no-cooling-water-connection good for high positioned magnet. It also eases alignment work.

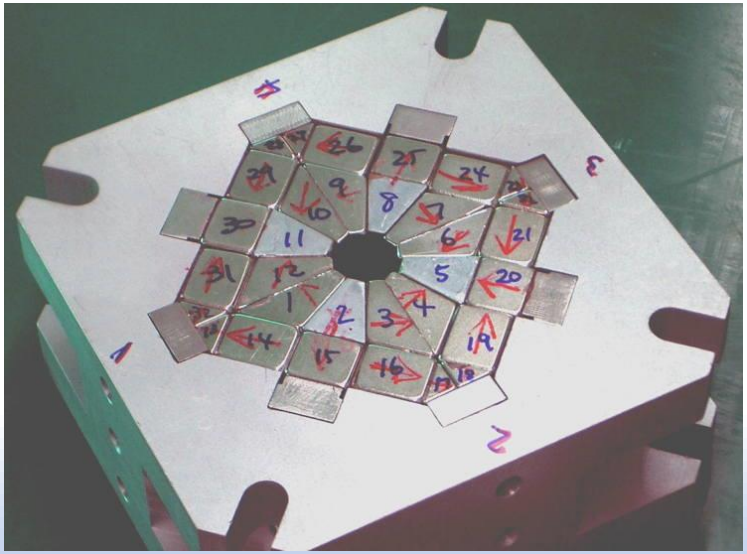

Permanent Q-mag example (Y. Iwashita)

Vacuum Chamber

Total length of vacuum chamber = about 34.2 km are required

Required number of Vacuum chamber

For injector to DR : ~ 1km x 2 = ~2km
For DR : 3.2km x 2 = 6.4km
For DR to Main-Linac : ~10km x 2 = ~20km
For Main-Linac to IP : 2.3km + 3.5km = 5.8km

Total length of vacuum chamber = about 34.2 km are required

As an example, Damping Ring Vacuum Chambers (Copper chamber)

Other are SUS chamber

Figure 6.10
(a) Wiggler vacuum chamber with clearing electrode and 20 mm tall antechambers with recessed NEG strips. (b) Wiggler section photon stop showing sloping and grooved photon-absorbing walls [116].

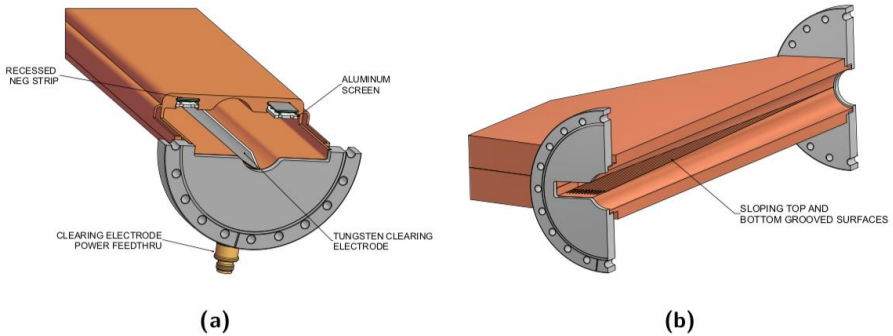

Figure 6.11
Side-by-side comparison of ILC DR vacuum chamber profiles. Dimensions are in millimeters [116].

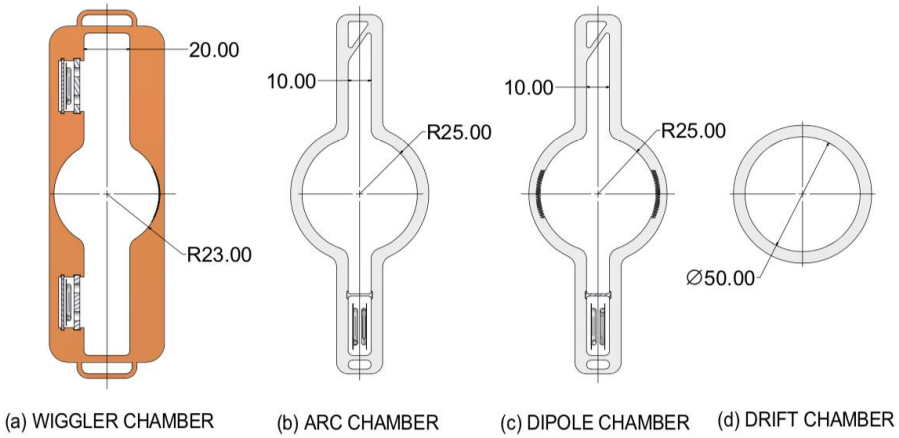

Testing and Installation

Cryomodule Production Plan Consideration

Total 906 Cryomodules

Production

Assume;
From Europe
302 cryomodules
From US
302 cryomodules
In Japan
302 cryomodules

(Preparation = 4 years)
Production = 9 years
Installation = Last 2 years

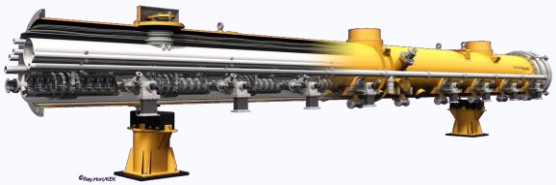

From Europe and US
~67 cryomodule/year = ~1.3 cryomodules/week
In Japan
~34 cryomodule/year = ~0.7 cryomodules/week

Storage

During tunnel work and utility installation 7 years, fabricated cryomodule need to store. (14m x 3m=42m^2/cryomodule)

For 7 years, storage space is necessary as follows;
from Europe,US = 470 cryomodules = 19,740 m^2 (140m x 140m)
In Japan = 238 cryomodules = 10,000 m^2 (100m x 100m)

Installation into tunnel

In the last 2 years, stored cryomodules are transported, installed using 4 access tunnel.

906 cryomodules / 2 years = 9 cryomodules / week
= 2.3 cryomodules /week /access-hole

Accelerator Facilities Mapping Consideration

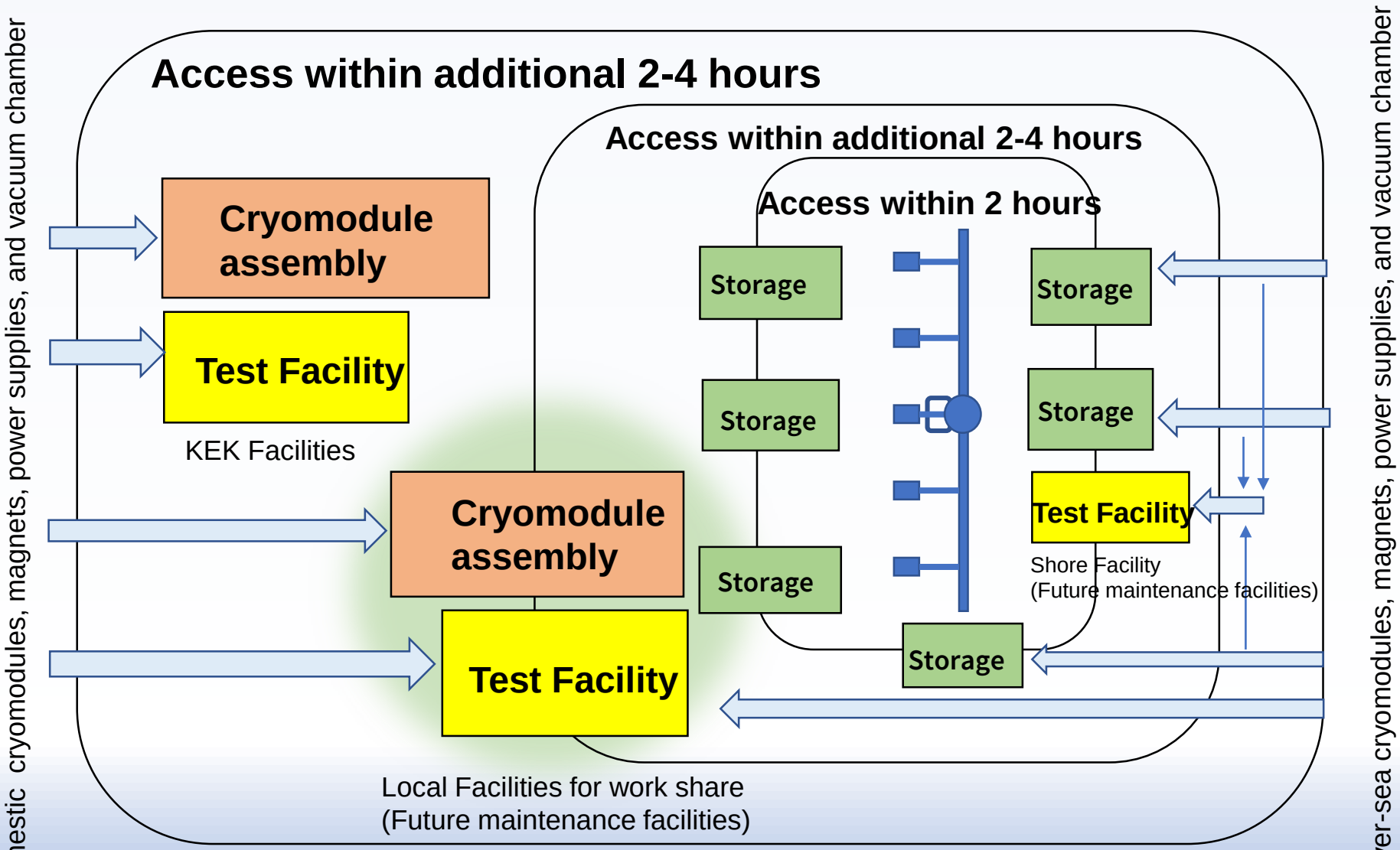

Test Facilities handles cryomodule, magnet, vacuum chamber

1-hour drive area at candidate site

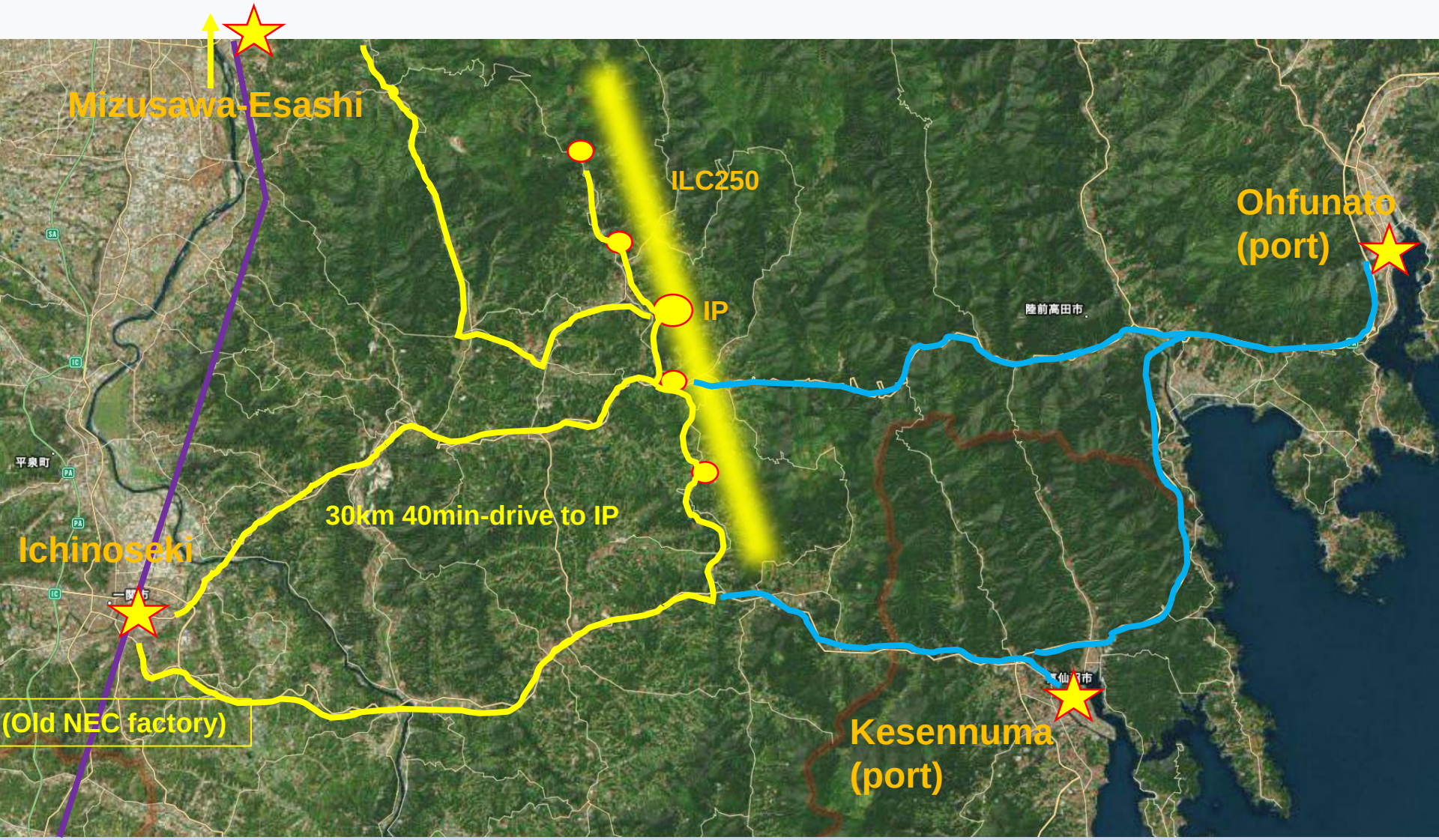

Shinkansen and highway Line (Left-hand)

Sea-shore Line (Right-hand)

Summary

ILC (International Linear Collider) uses superconducting linear accelerator for the electron-positron collision experiment.

7800 SRF cavities and 906 cryomodules are in the main linac, Attaining cavity gradient & Q performance is the key technology .

Large number of magnets, power supplies, vacuum chambers are also required with high performance.

Consideration of accelerator component test & storage in 9-years and installation into tunnel in last 2-years, are presented.

World-wide Industry cooperation is very important for large amount of component production.

END

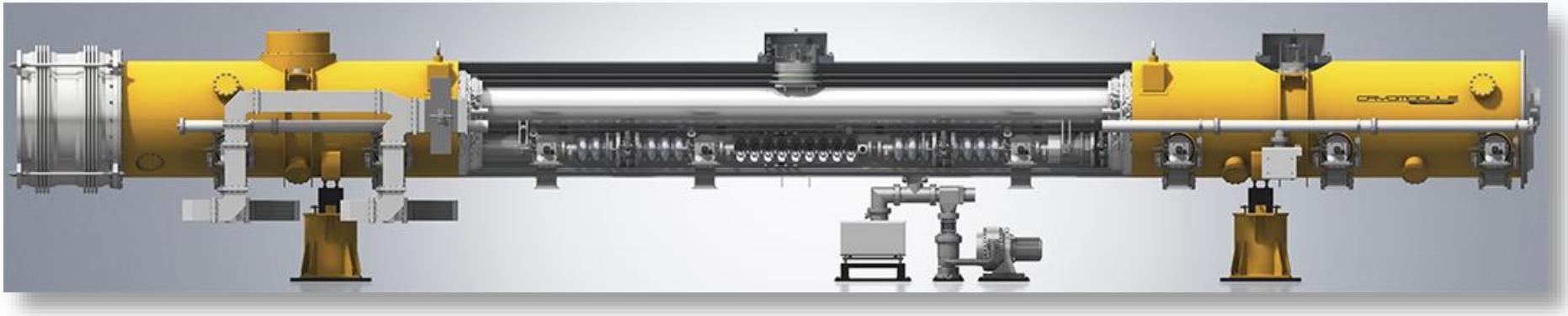

Thanks for your attention