SuperKEKB e+ source

Yoshinori Enomoto

KEK electron positron injector LINAC group

Today's topic

- 3 major findings since ALCW2018 (May 2018)
  - New material for FC head
  - Magnetic field correction in solenoid section
  - Improvement of pulsed power supply and circuit

General lesson from specific topics in SupreKEKB

OUTLINE

- Introduction of SuperKEKB positron source
- lesson 1 : avoid deformation of FC head
  - Solution 1 : new material for FC head
- lesson 2 : compensate deformation of magnetic field
  - Solution 2 : BPM and steering coils inside solenoid
- lesson 3 : decrease voltage on FC head
  - Solution 3 : LCR measurement and control
- upgrade plan

OUTLINE

- Introduction of SuperKEKB positron source
- lesson 1 : avoid deformation of FC head
  - Solution 1 : new material for FC head
- lesson 2 : compensate deformation of magnetic field
  - Solution 2 : BPM and steering coils inside solenoid
- lesson 3 : decrease voltage on FC head
  - Solution 3 : LCR measurement and control
- upgrade plan

Positron source setup 1

Positron target and capture section

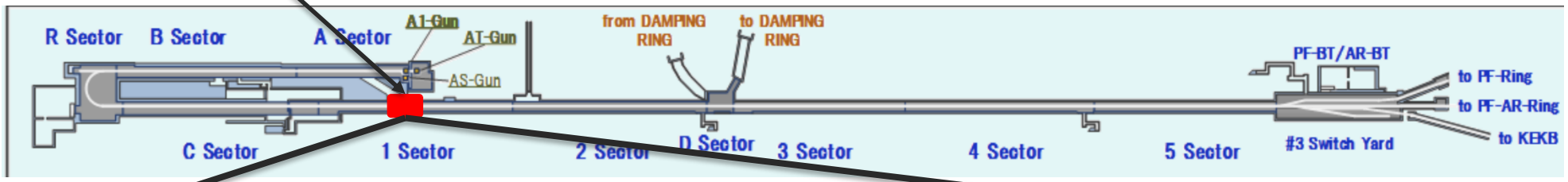

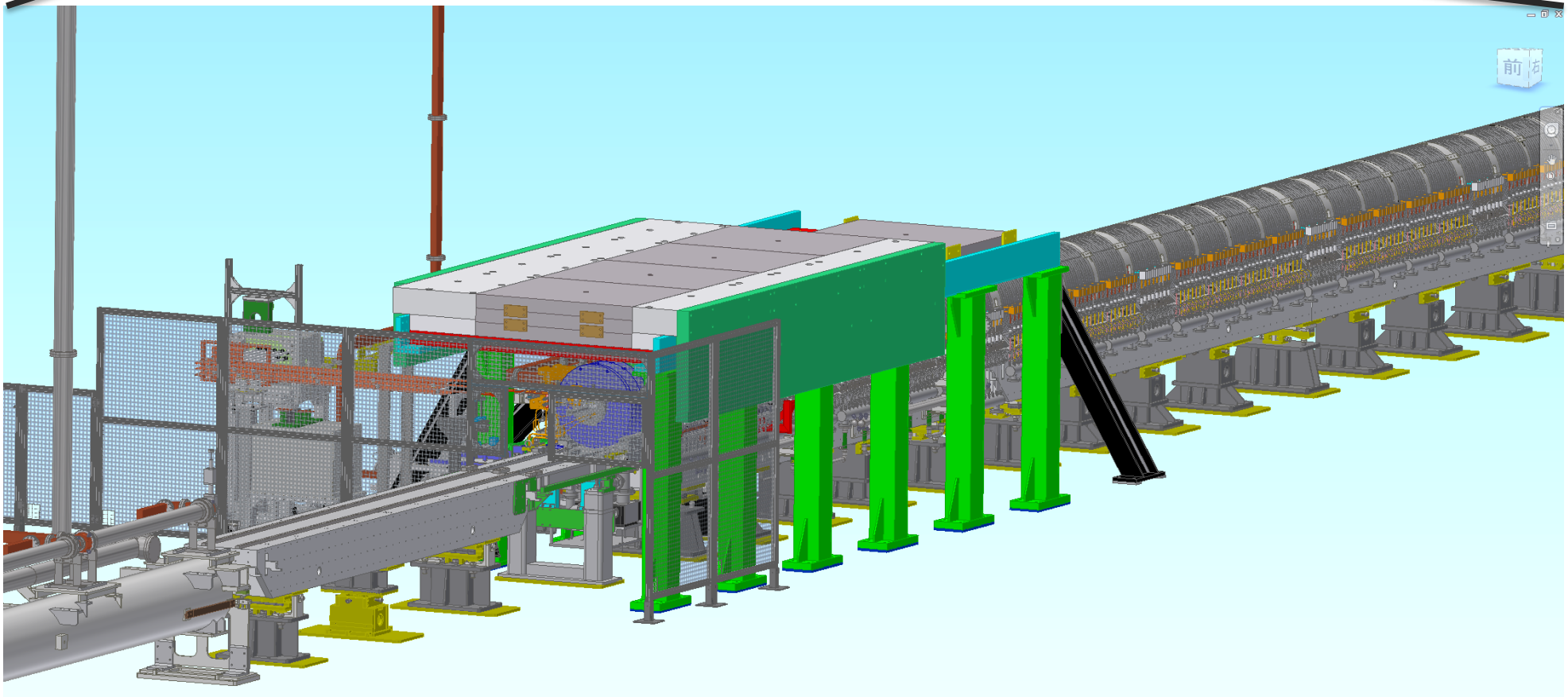

Positron source setup 2

FC head + BC + target = FC assembly

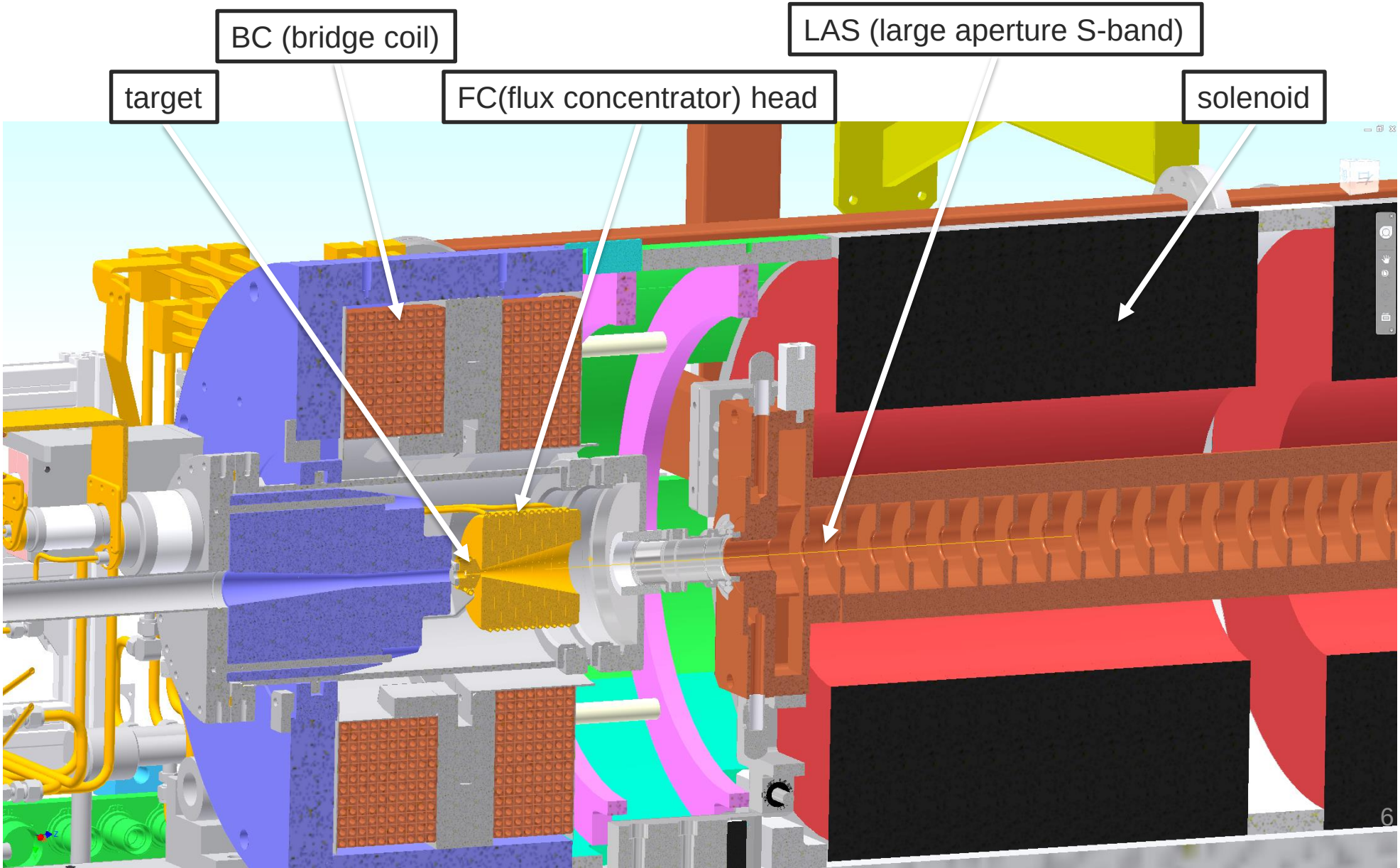

Positron source setup 3

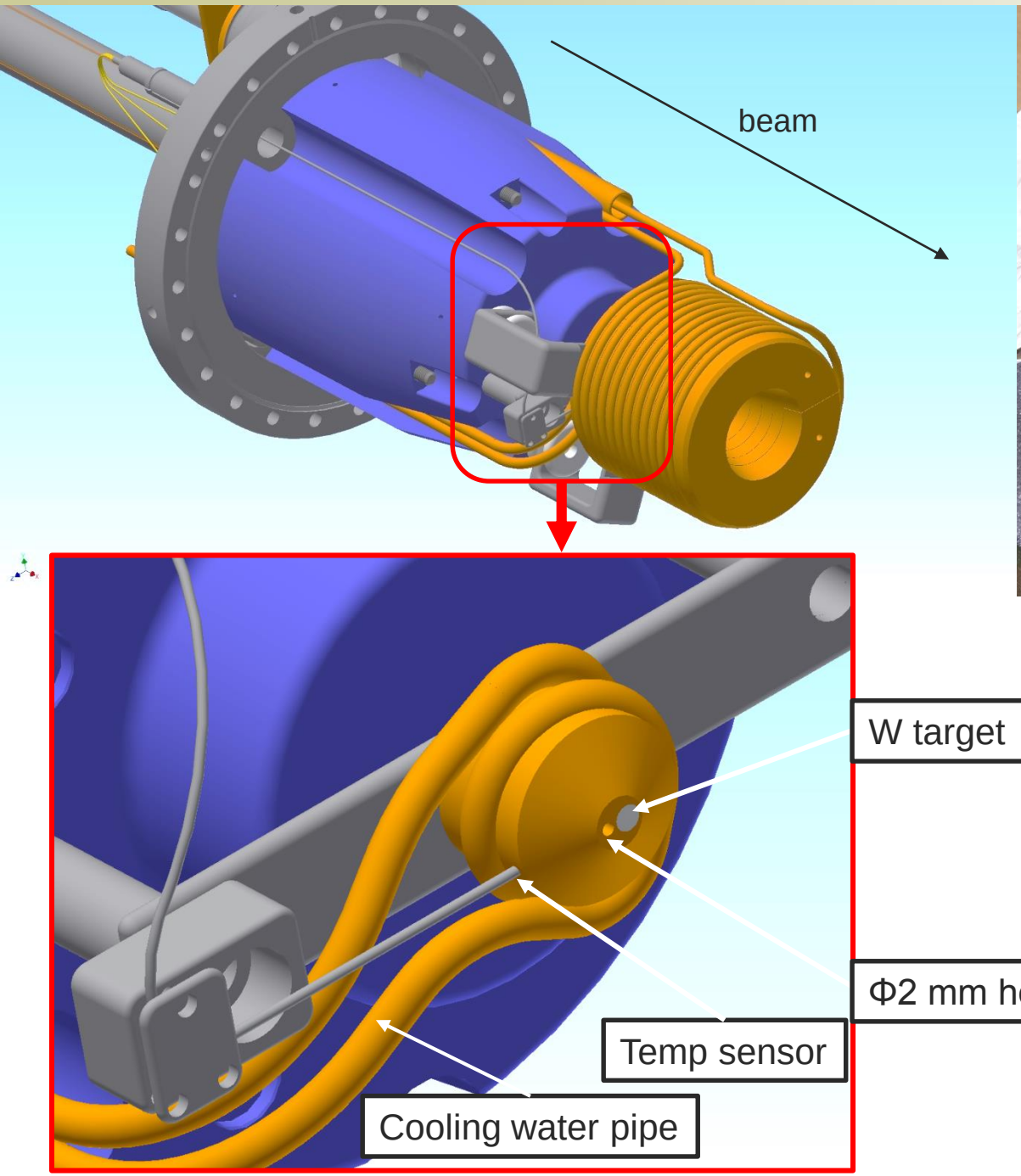

Positron source setup for SuperKEKB 4

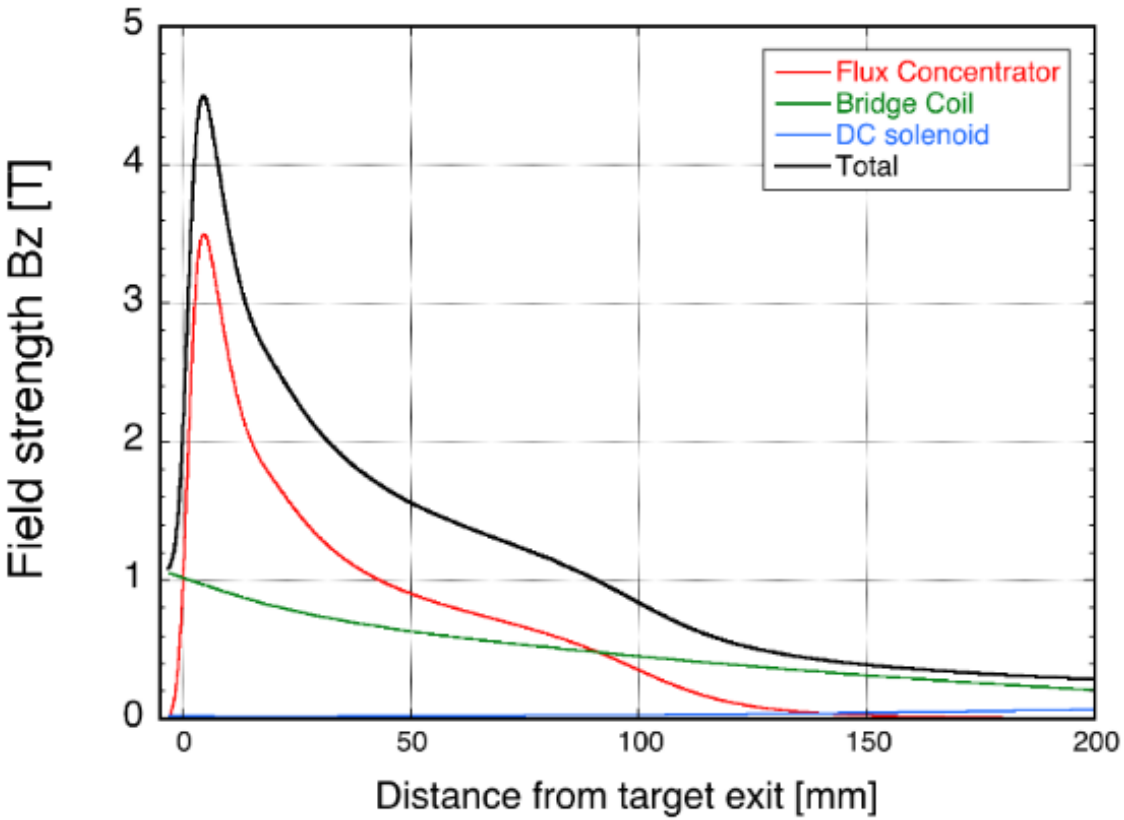

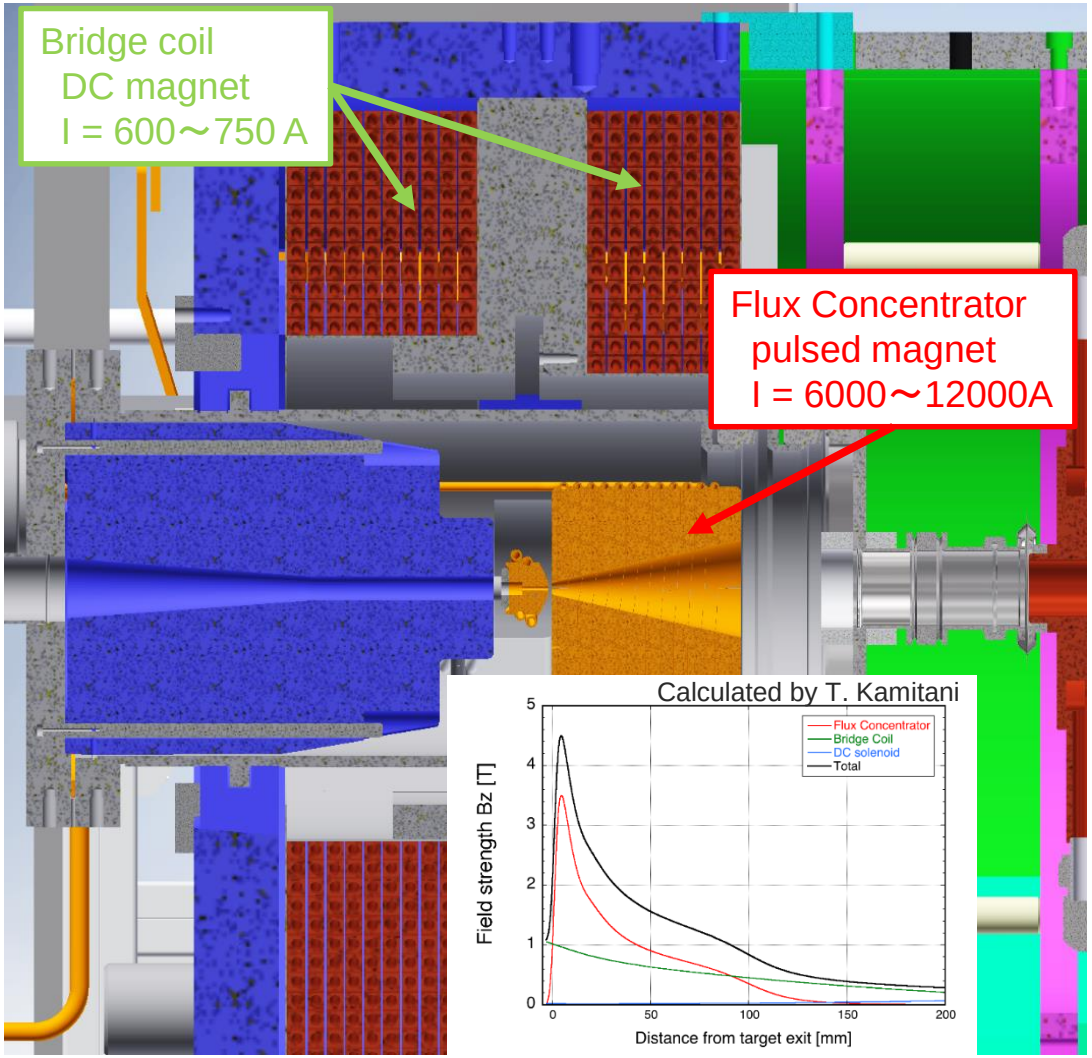

Ratio B @ target / B @ entrance of the LAS is important
stronger field is preferred in the following solenoid section
much stronger field is required @ target

Capture section after the target 1

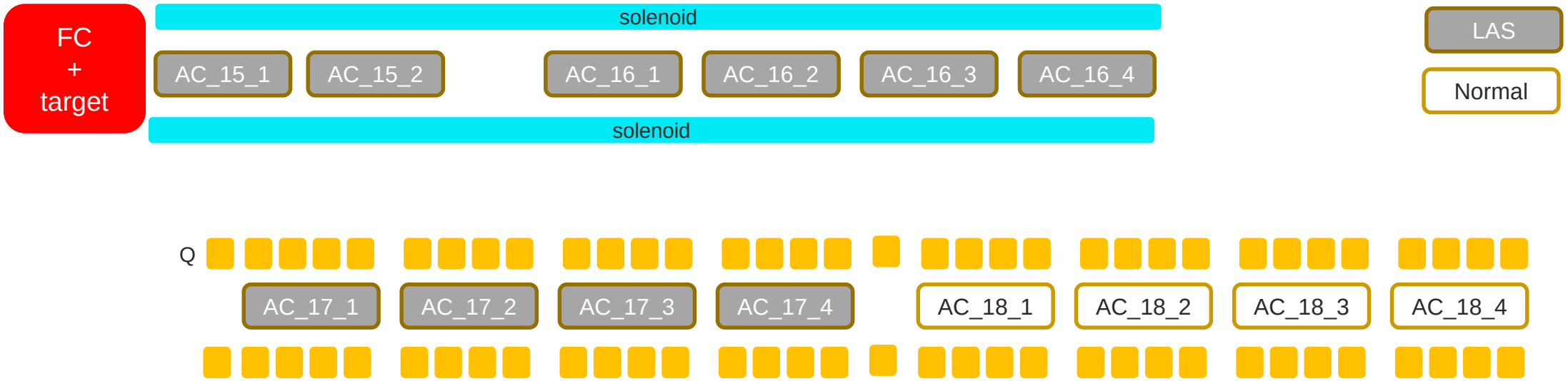

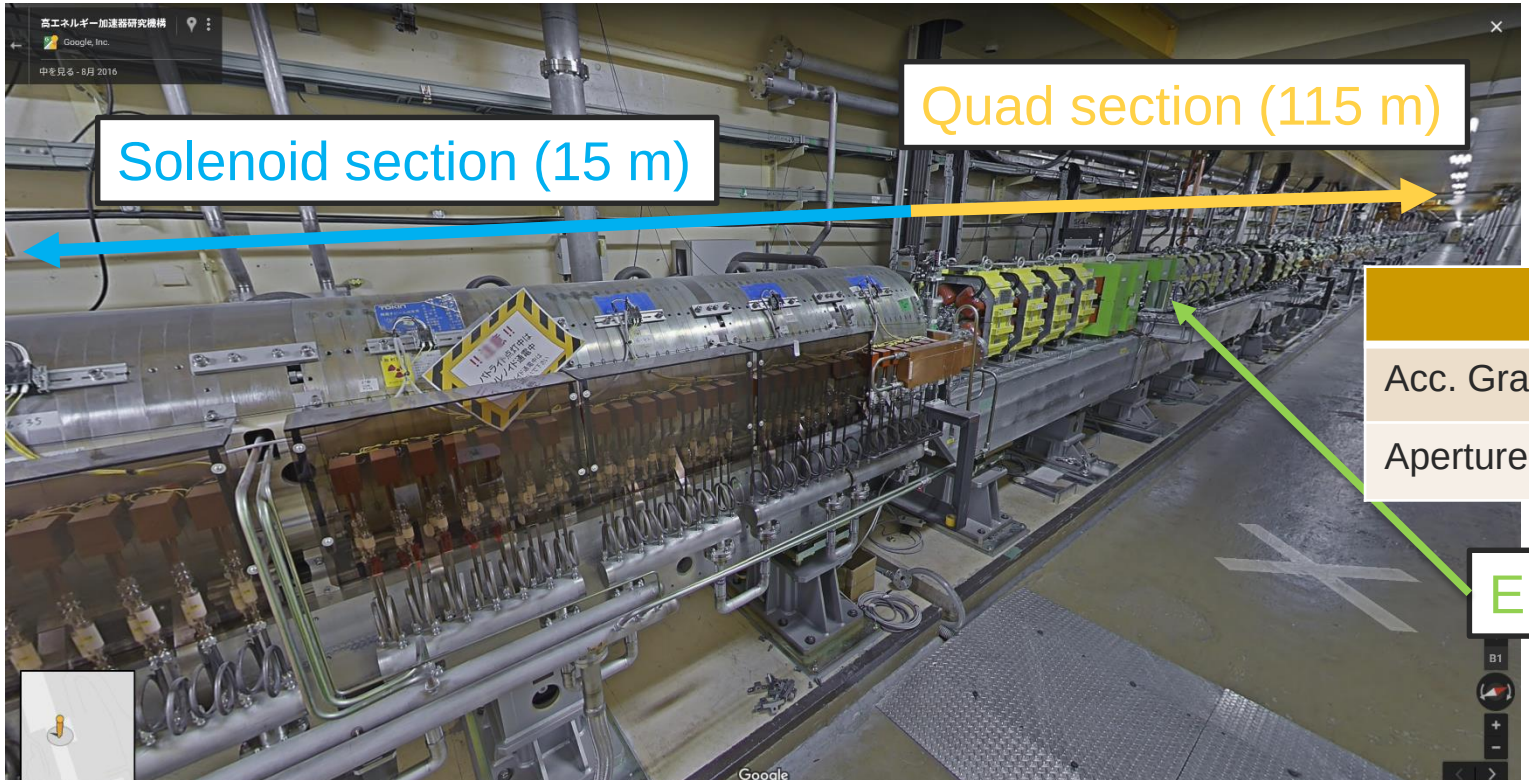

	LAS	Normal S band
Acc. Gradient (MV/m)	14/10	20
Aperture (mm)	30	20

Electron / positron separator

Capture section after the target 2

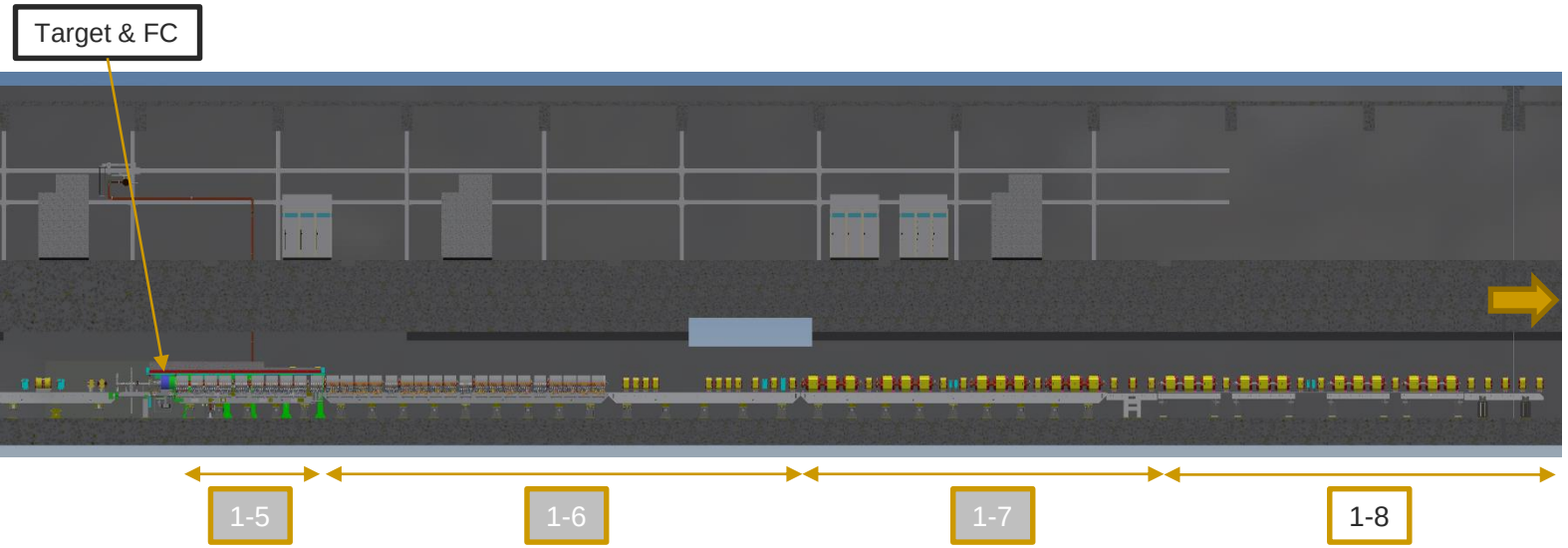

15m long solenoid
About 100 Quad magnet
1.1 GeV @ DR

LAS x 10

Normal x 32

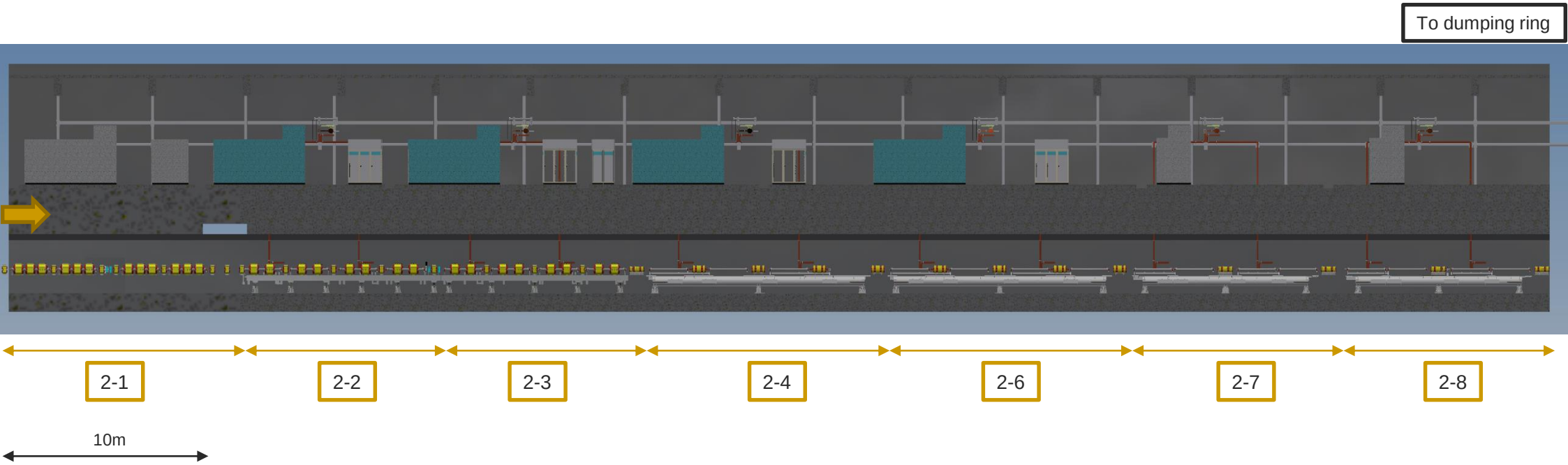

Required injector beam parameters

Stage	KEKB (final)		Phase-I		Phase-II		SuperKEKB (final)	
Beam	e+	e–	e+	e–	e+	e–	e+	e–
Energy	3.5 GeV	8.0 GeV	4.0 G	GeV	4.0 GeV	7.0 GeV	4.0 GeV	7.0 GeV
Stored current	1.6 A	1.1 A	1 A	1 A	1.5 A	1.2 A	3.6 A	2.6 A
Life time (min.)	150	200	100	100	–	–	6	6
Bunch charge (nC)	primary e- 10 → 1	1	primary e- → 0.4	1	0.5	1	primary e- 10 → 4	4
Norm. Emittance (γβε) (μrad)	1400	310	1000	130	200/40 (Hor./Ver.)	150	100/15 (Hor./Ver.)	40/20 (Hor./Ver.)
Energy spread	0.125%	0.125%	0.5%	0.5%	0.16%	0.1%	0.16%	0.07%
Bunch / Pulse	2	2	2	2	2	2	2	2
Repetition rate	50 Hz		25 / 50 Hz		25 / 50 Hz		50 Hz	
Simultaneous top-up injection (PPM)	3 rings (LER, HER, PF)		No top-up		Eventually		4+1 rings (LER, HER, DR, PF, PF-AR)	

x2.25

1/25

Injection requirement

Present working assumption (final)

Life	360 s
Current	3.6 A
Injection bunch charge	4 nC
Injection rate	25* Hz x 2 bunch
Injection efficiency	50 %
Circulation frequency	10^5

$$\frac{dI}{dt} = \frac{3.6\ [\mathrm{A}]}{360\ [\mathrm{s}]} = 10\ [m\mathrm{A/s}]$$

$$4\ [\mathrm{nC}] \times 25\ [\mathrm{Hz}] \times 2\ [\mathrm{bunch}] \times 50[\%] \times 10^5[\mathrm{Hz}] = 10\ [m\mathrm{A/s}]$$

Injection requirement

Present working assumption (final)

Life	360 s
Current	3.6 A
Injection bunch charge	4 nC
Injection rate	25* Hz x 2 bunch
Injection efficiency	50 %
Circulation frequency	10^5

$$\frac{dI}{dt} = \frac{3.6\ [\mathrm{A}]}{360\ [\mathrm{s}]} = 10\ [m\mathrm{A/s}]$$

$$4\ [\mathrm{nC}] \times 25\ [\mathrm{Hz}] \times 2\ [\mathrm{bunch}] \times 50[\%] \times 10^5[\mathrm{Hz}] = 10\ [m\mathrm{A/s}]$$

Typical Phase 3 operation

Life	2500 s
Current	0.5 A
Injection bunch charge	0.6 nC
Injection rate	6.2 Hz x 1 bunch
Injection efficiency	50 %
Circulation frequency	10^5

$$\frac{dI}{dt} = \frac{0.5\ [\mathrm{A}]}{2500\ [\mathrm{s}]} = 0.2\ [m\mathrm{A/s}]$$

$$0.6\ [\mathrm{nC}] \times 6.25\ [\mathrm{Hz}] \times 1\ [\mathrm{bunch}] \times 50[\%] \times 10^5[\mathrm{Hz}] = 0.2\ [m\mathrm{A/s}]$$

*total rep. rate is 50 Hz
The other 25 Hz will be used electron injection

Due to limitation by Belle2 detector and SuperKEKB ring
Required injection amount is still low.

Positron charge and injection efficiency

Primary e- 7 nC@target

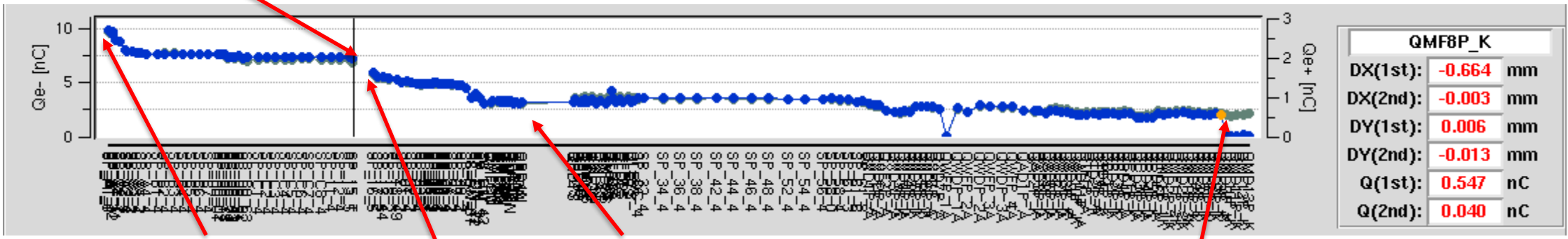

Primary e- 10 nC@e-gun

Positron 1 nC@DR

Positron 0.55 nC@BT end dump

Positron 1.5 nC@first BPM

Positron current in the ring (LER)

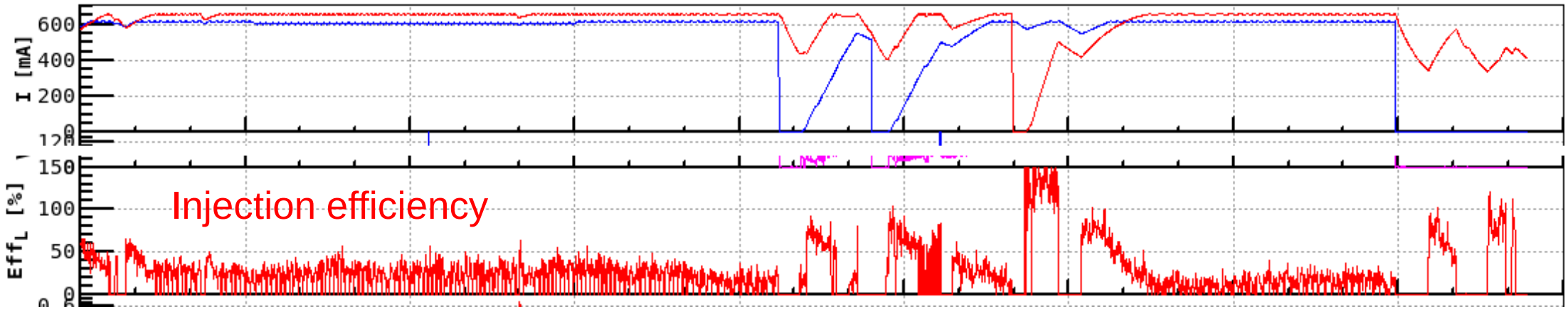

9 hours

Simulation and experiment

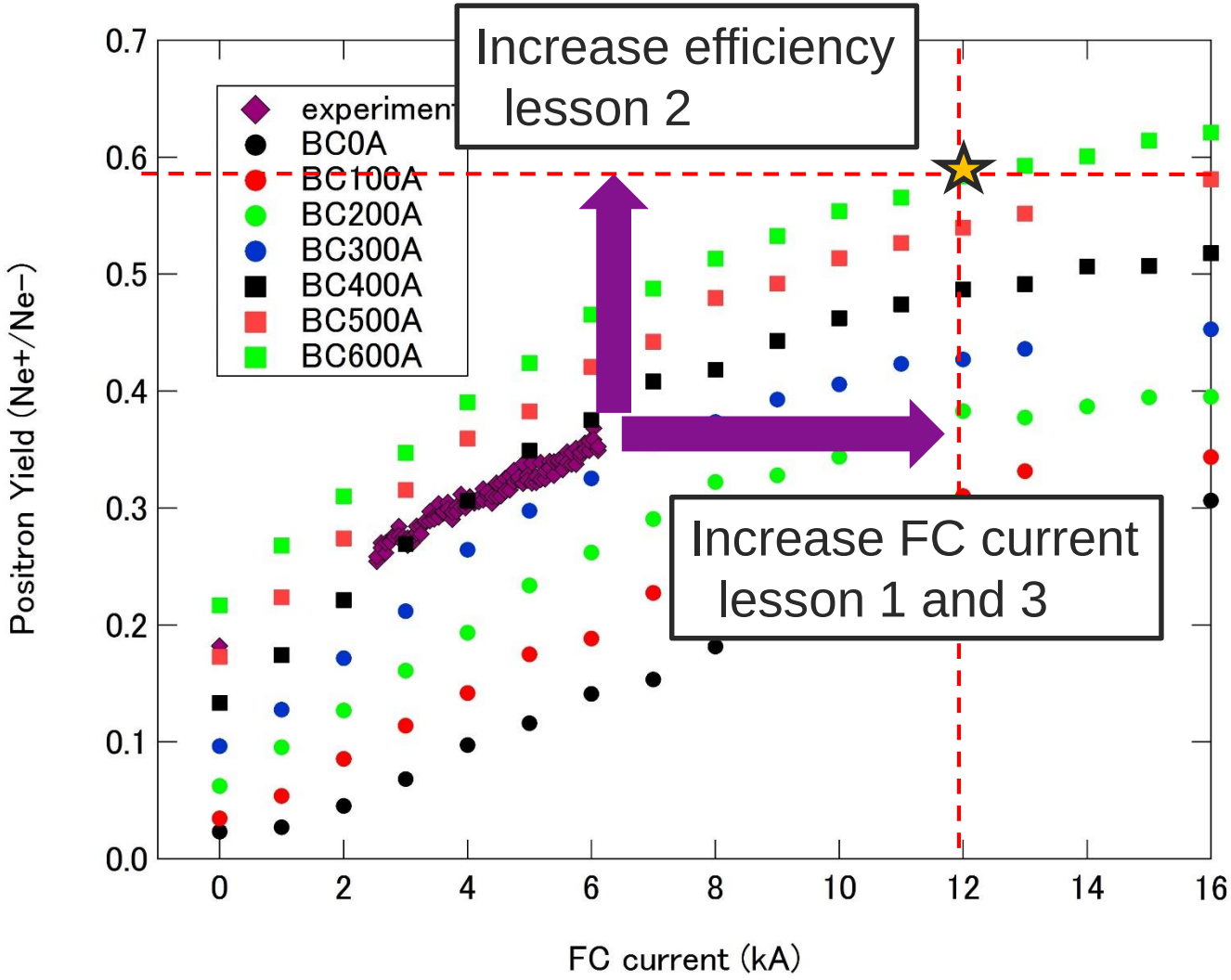

OUTLINE

- Introduction of SuperKEKB positron source
- lesson 1 : avoid deformation of FC head
  - Solution 1 : new material for FC head
- lesson 2 : compensate deformation of magnetic field
  - Solution 2 : BPM and steering coils inside solenoid
- lesson 3 : decrease voltage on FC head
  - Solution 3 : LCR measurement and control
- upgrade plan

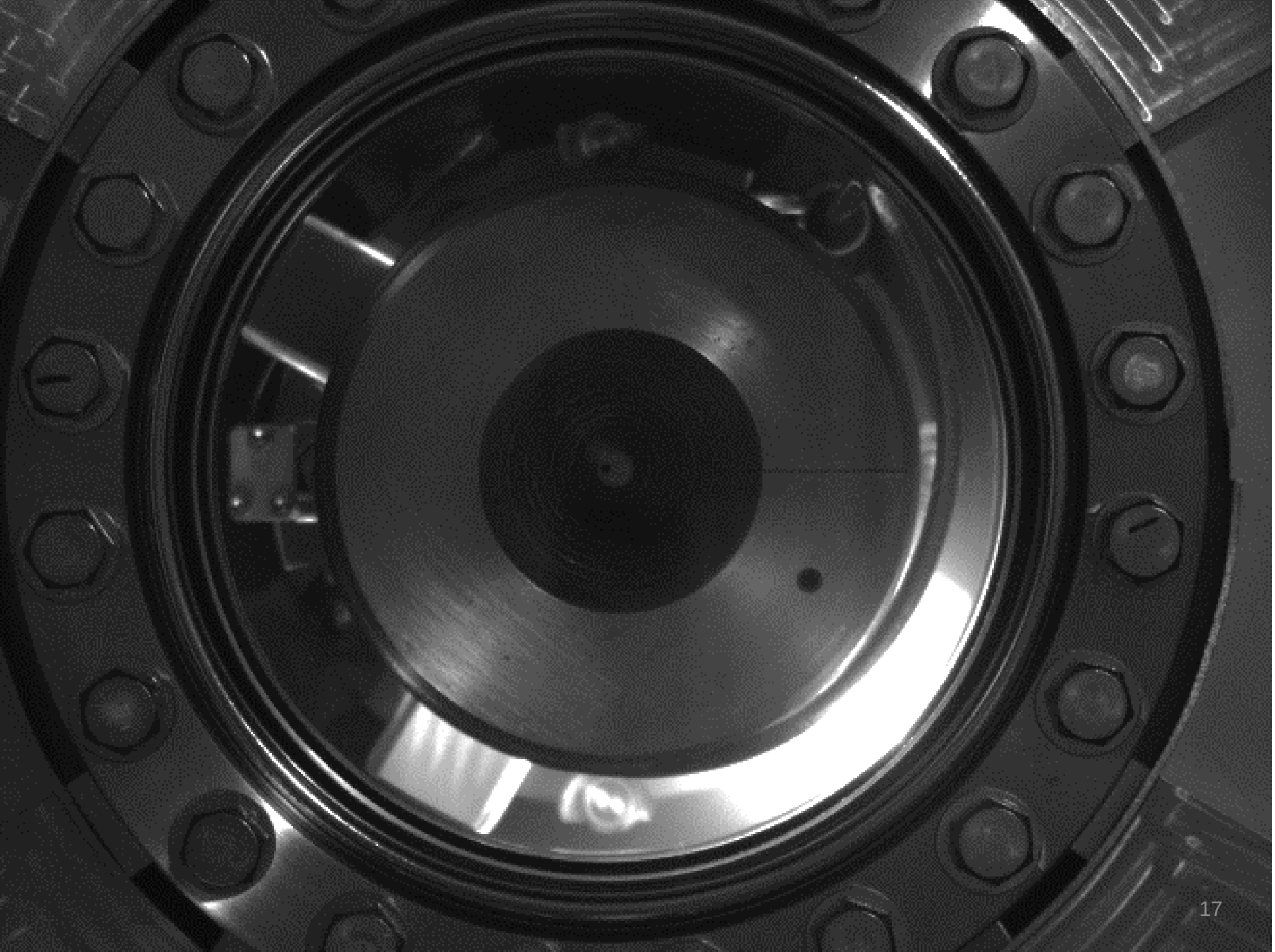

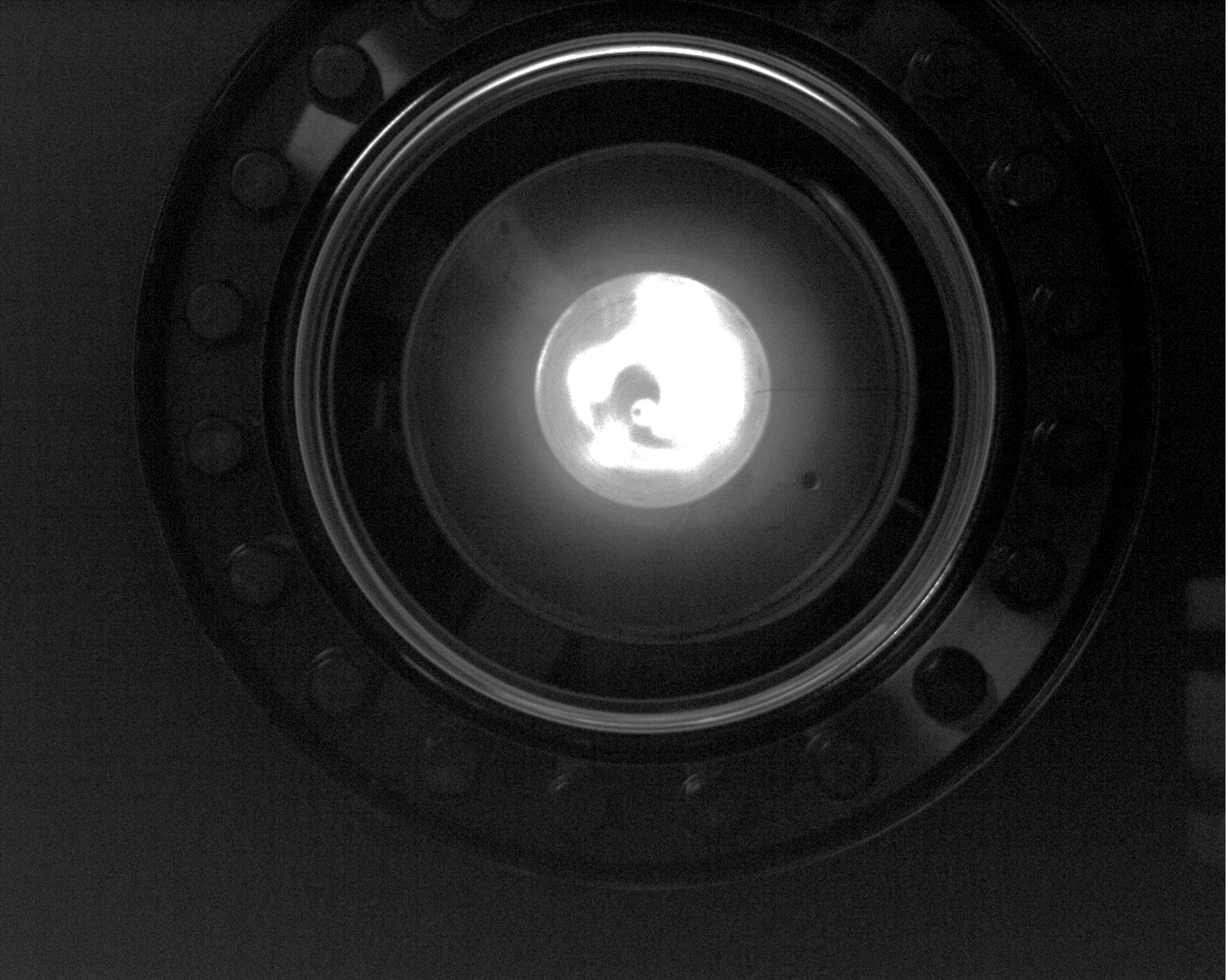

After large discharge…

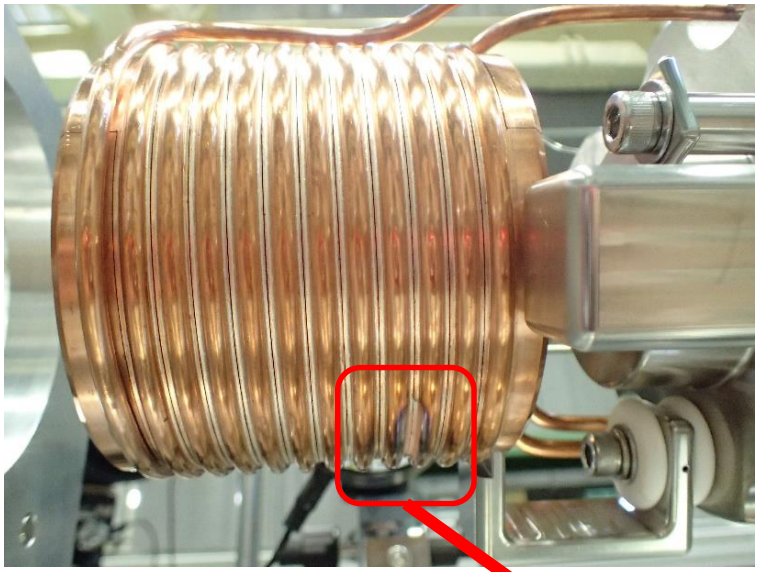

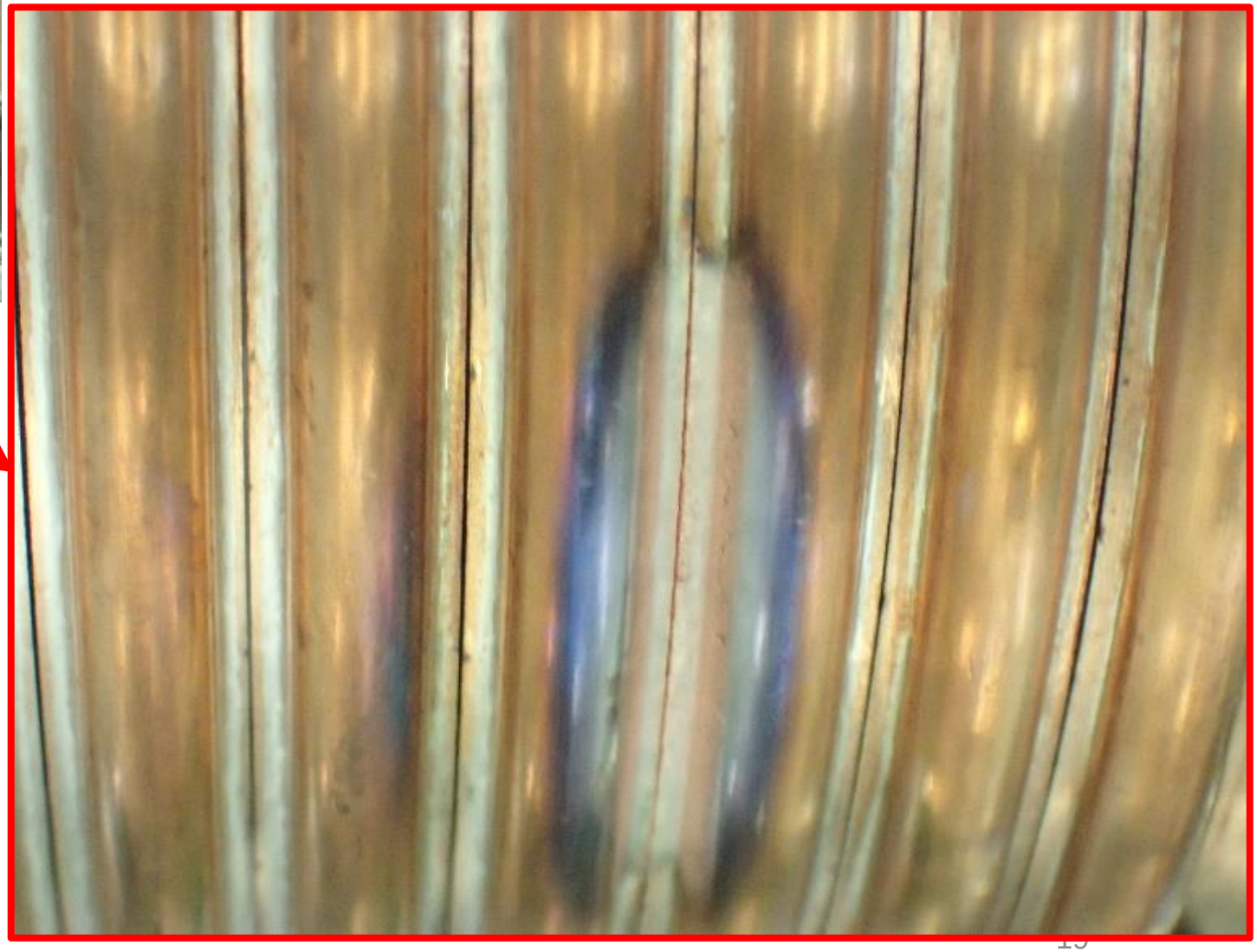

Slit gap got narrow. Not possible to apply high voltage unless the gap will be expanded.

New material for FC head

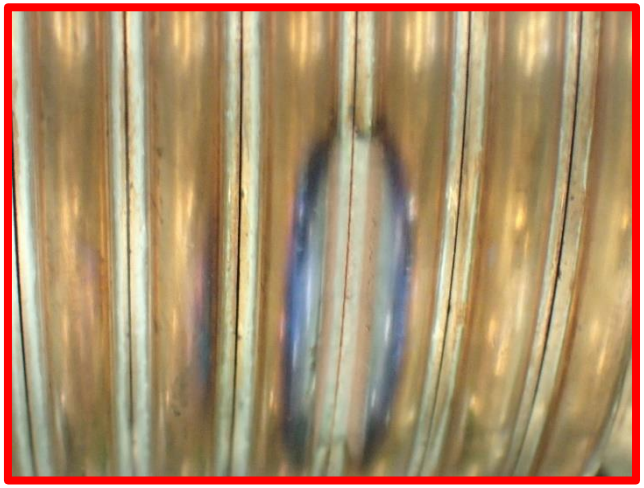

Avoid discharge
→Reduce electric field between gap
→manage slit distance
→avoid deformation

$$E \sim \frac{dV}{dx}$$

- Increase yield strength of the material
- Work hardening process was tested
  - Result was not clear
- Another approach using Cu-alloy

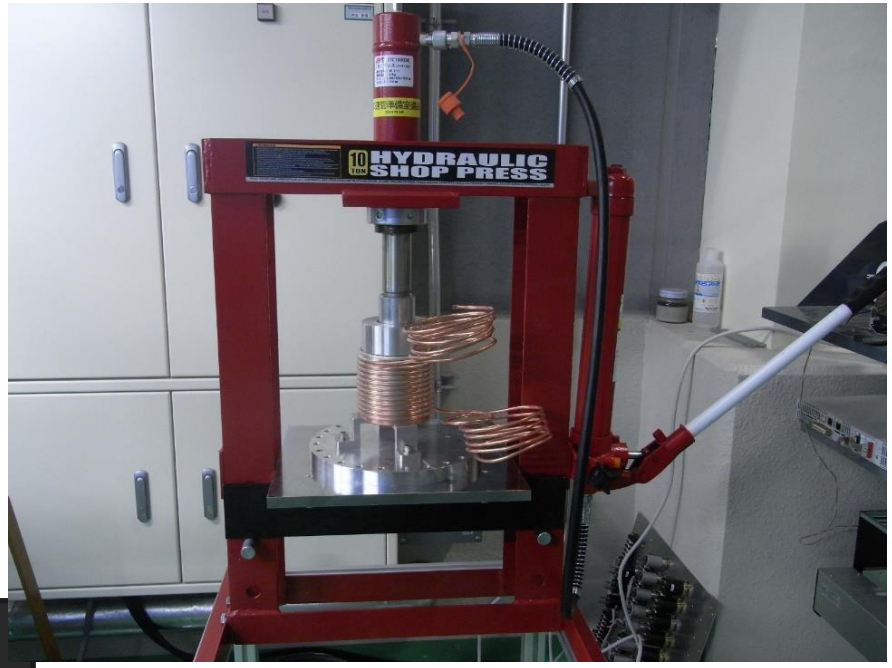

Requirements for material of the FC head are
- Good brazing characteristic
- High yield strength even after brazing
- High electric and thermal conductivity

Cu alloys

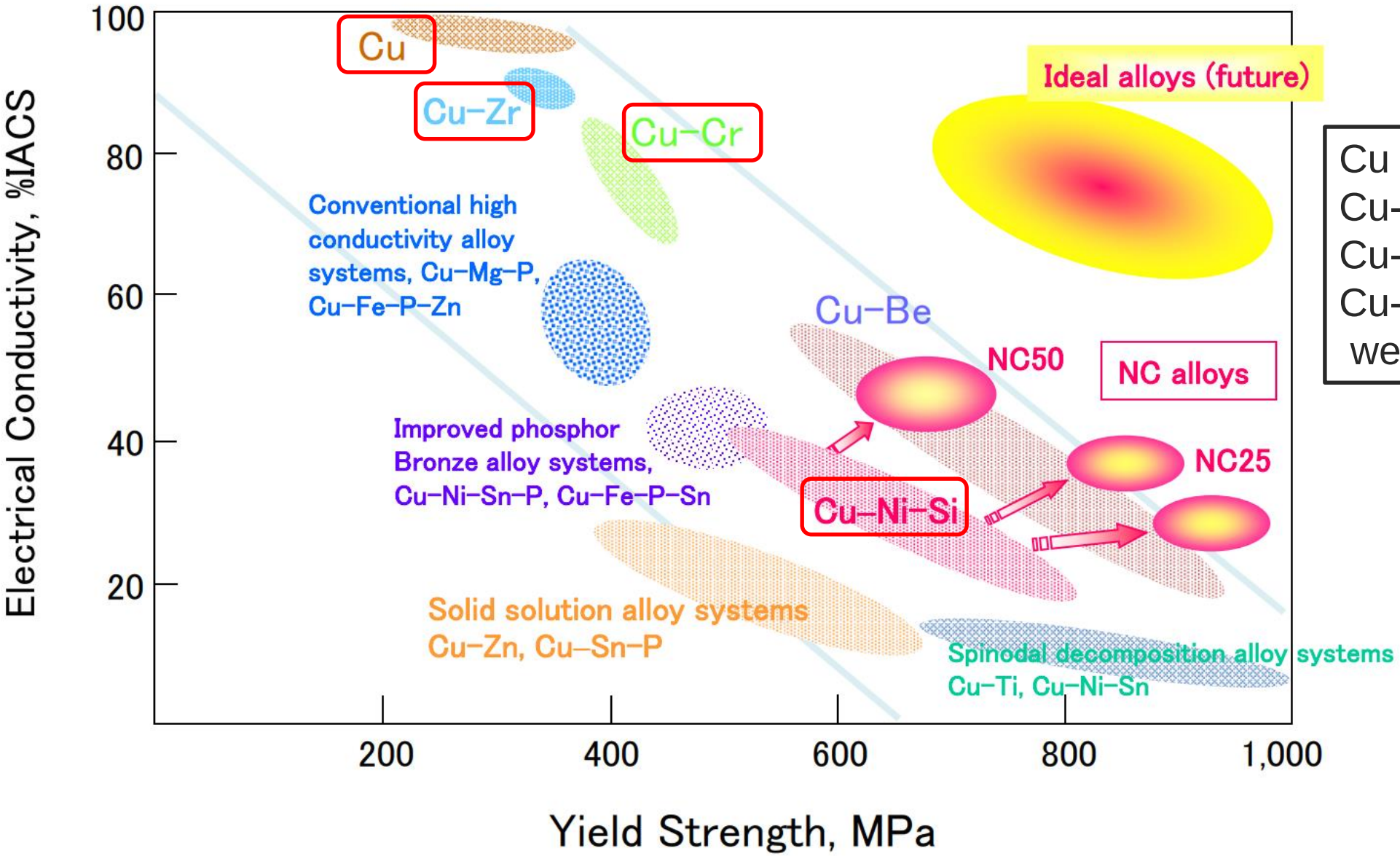

Cu
Cu-Zr
Cu-Cr
Cu-Ni-Si
were tested

Positions of various copper alloy systems in conductivity-strength map

Evaluation of brazing characteristic

Cu-Zr(SH-2)

Cu-Cr(SH-1)

P:Palladium

C1020

A:Silver

Cu-Ni-Si(NC50)

Measured properties of materials

Material	Cu (C1020)		Cu-Cr (SH-1)		Cu-Zr (SH-2)		Cu-Si-Ni (NC50)		
Thermal cycle		After brazing		After blazing		After blazing		After blazing	After aging
conductivity %IACS	102.2	102.1	90.8	76.0	81.1	68.5	50.3	25.1	48.8
Hardness	87.4	30.4	71.6	60.0	45.9	55.8	95.3	61.2	95.4
Tensile strength Mpa	327.4	232.1	402.6	237.2	443.1	238.3	648.7	323.7	658.8
Elongation %	21.6	54.4	36.8	56.8	32.6	51.4	14.8	46.6	10.6
Yield strength Mpa	322.3	12.9	293.6	57.9	348.2	40.8	551.8	109.7	513.1

Strain-stress curve for C1020 and NC50

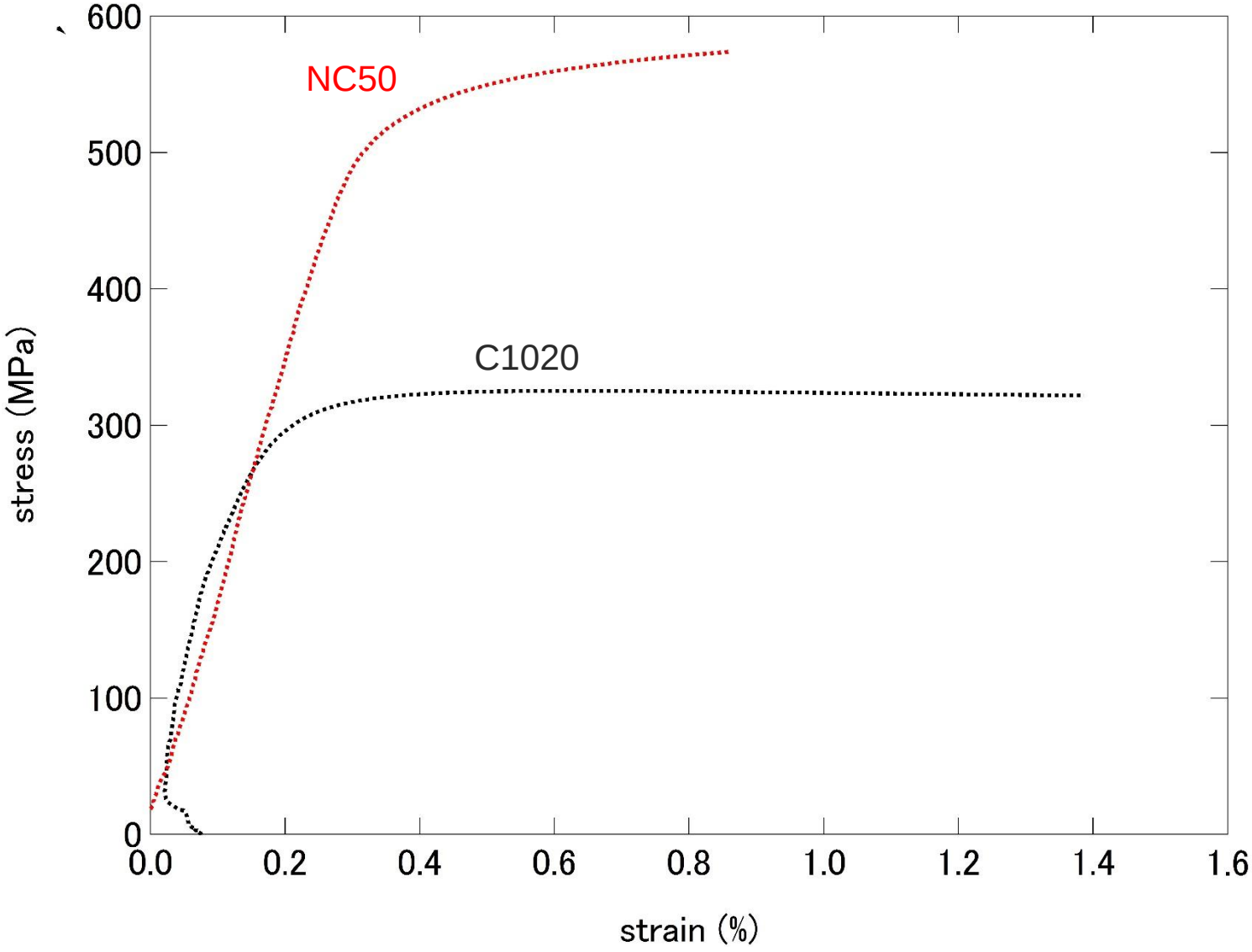

Strain-stress curve for C1020 and NC50

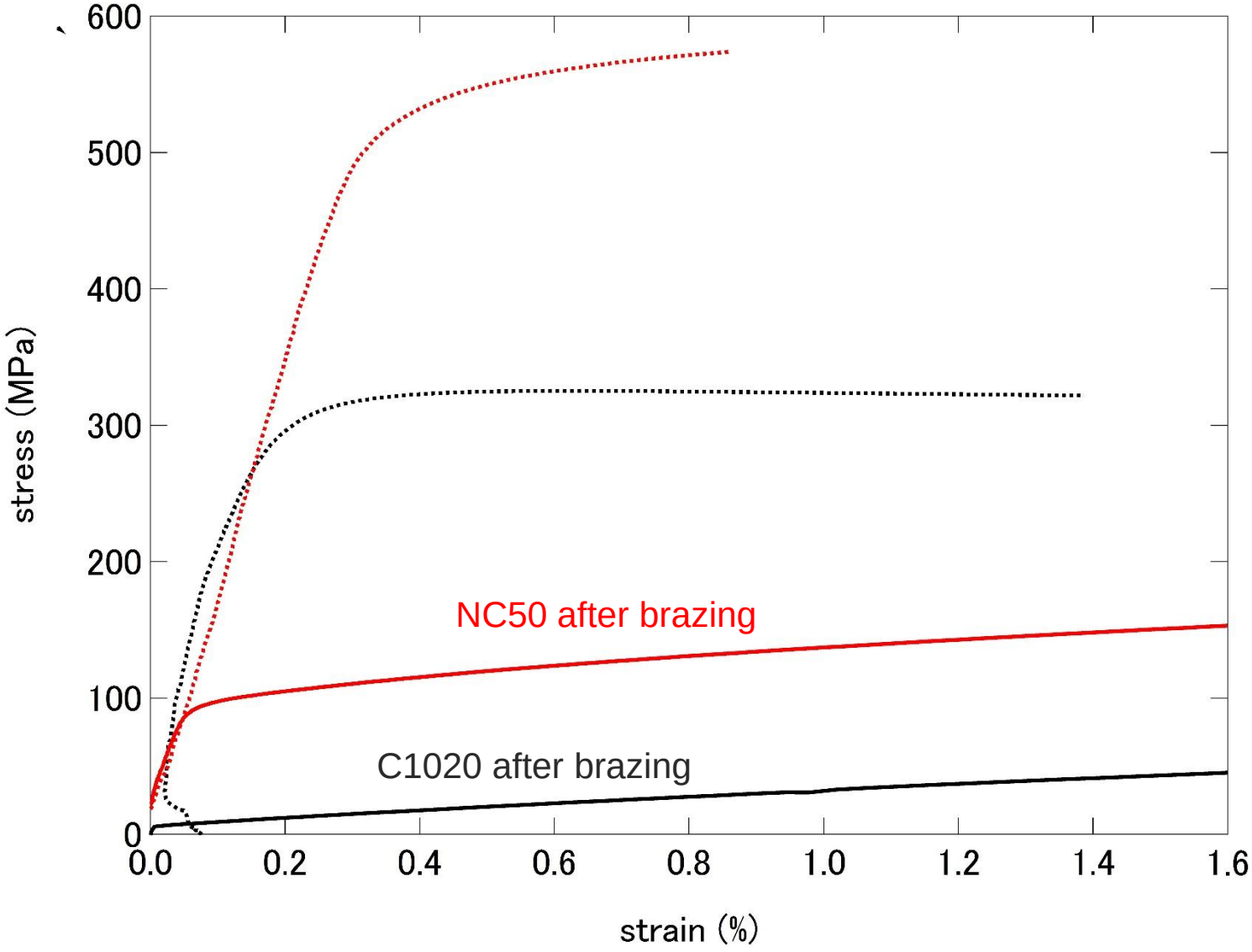

Strain-stress curve for C1020 and NC50

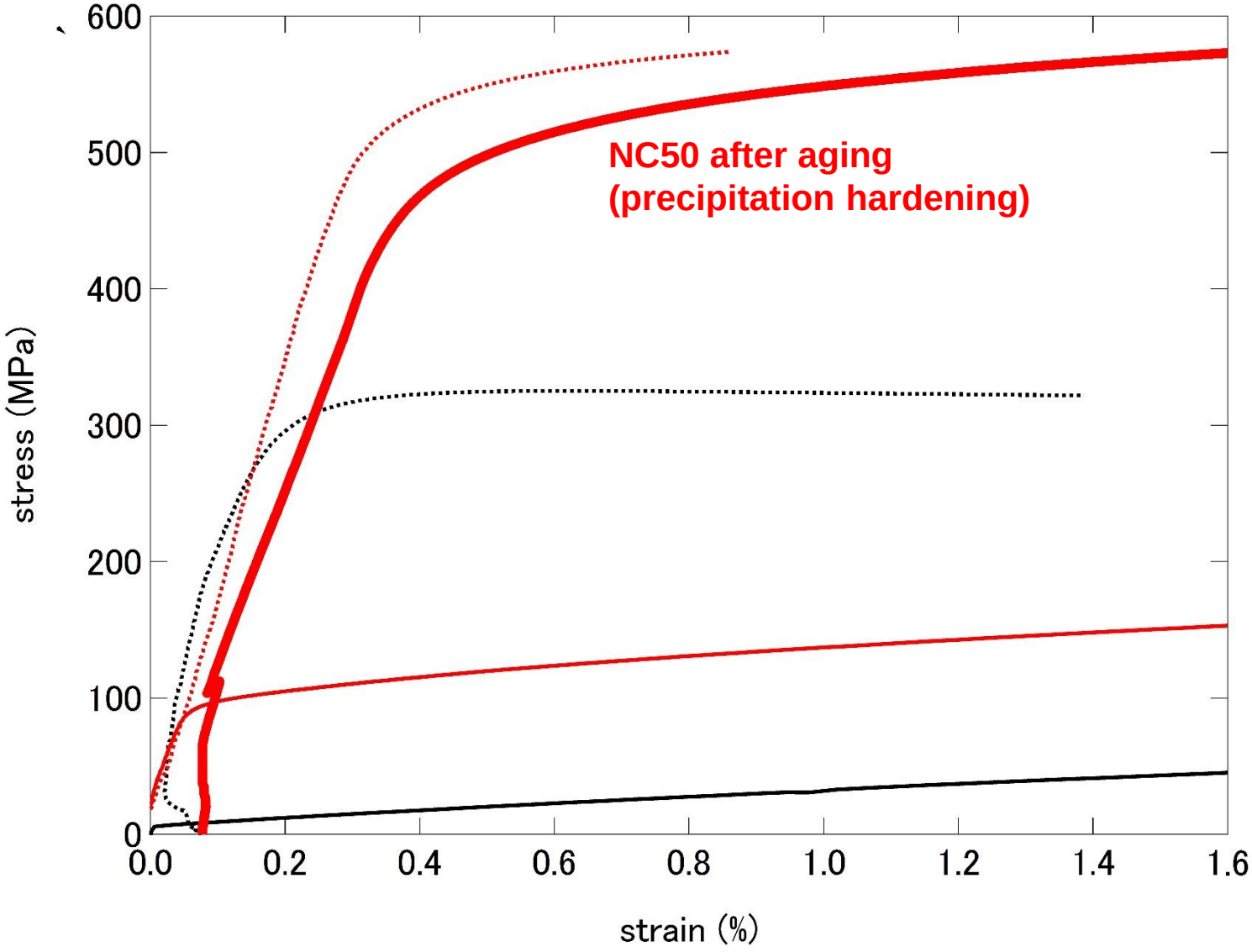

Strain-stress curve for C1020 and NC50

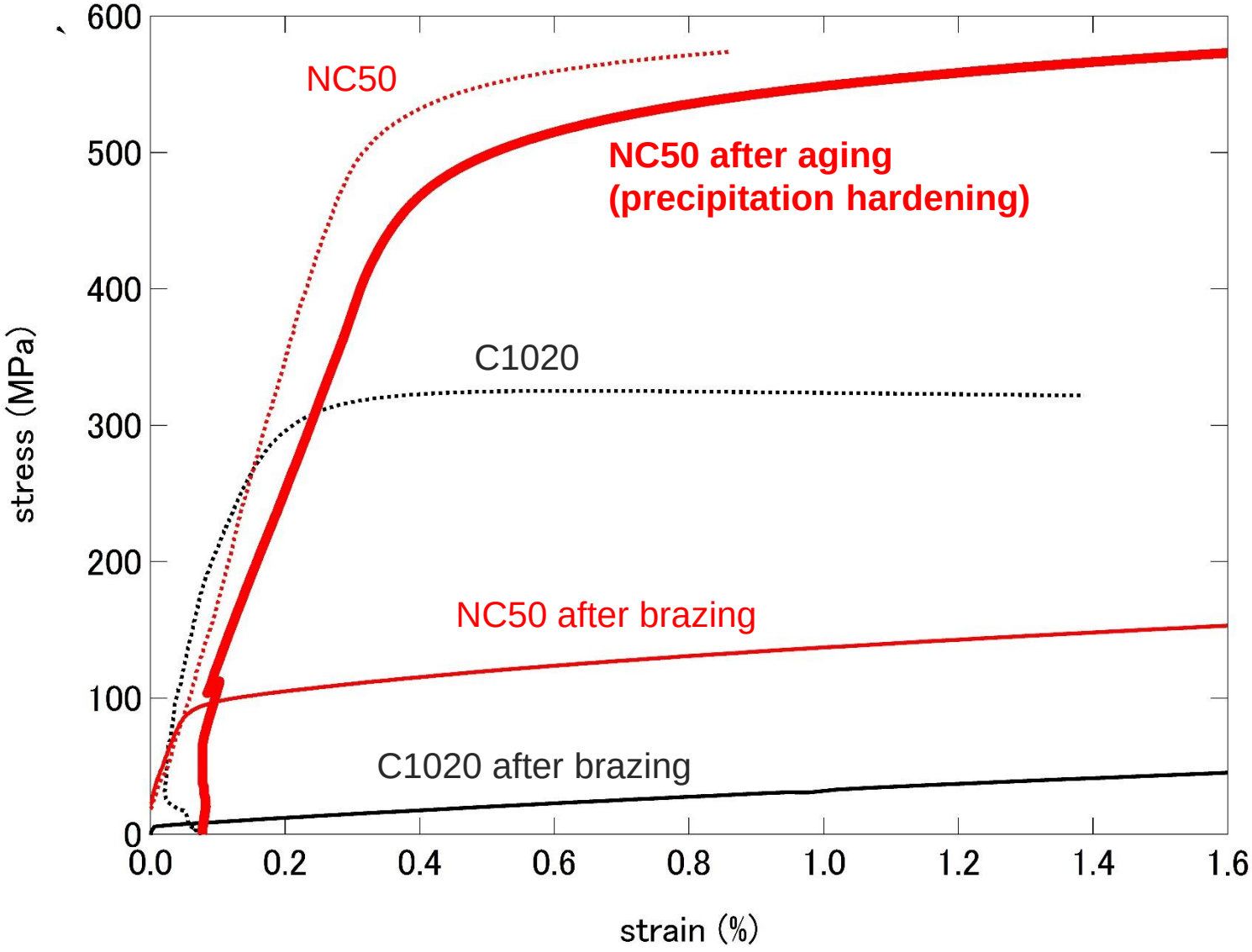

Yield strength

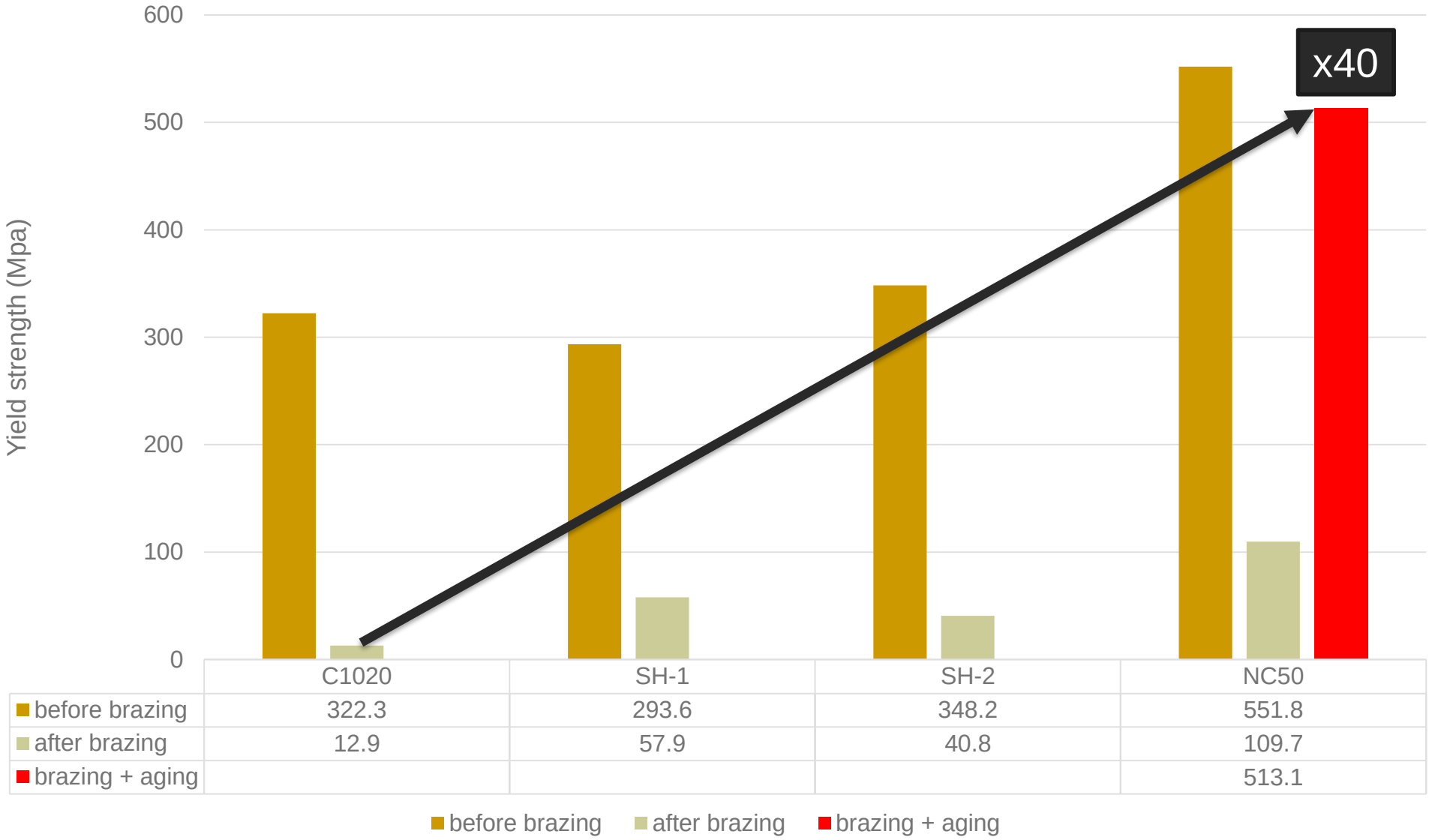

	C1020	SH-1	SH-2	NC50
before brazing	322.3	293.6	348.2	551.8
after brazing	12.9	57.9	40.8	109.7
brazing + aging				513.1

Production and simulation

- After 6 months of manufacturing, new FC head using NC 50 was delivered on 18th Oct.
- Evaluation at our test bench has started.
  - Shows very good result now.
  - Already reached 12.5 kA without discharge.
- To evaluate mechanical stress, combined electromagnetic and mechanical simulation by ANSYS-Maxwell is in progress by Y. Morikawa.

Insertion of insulator plates in the slits

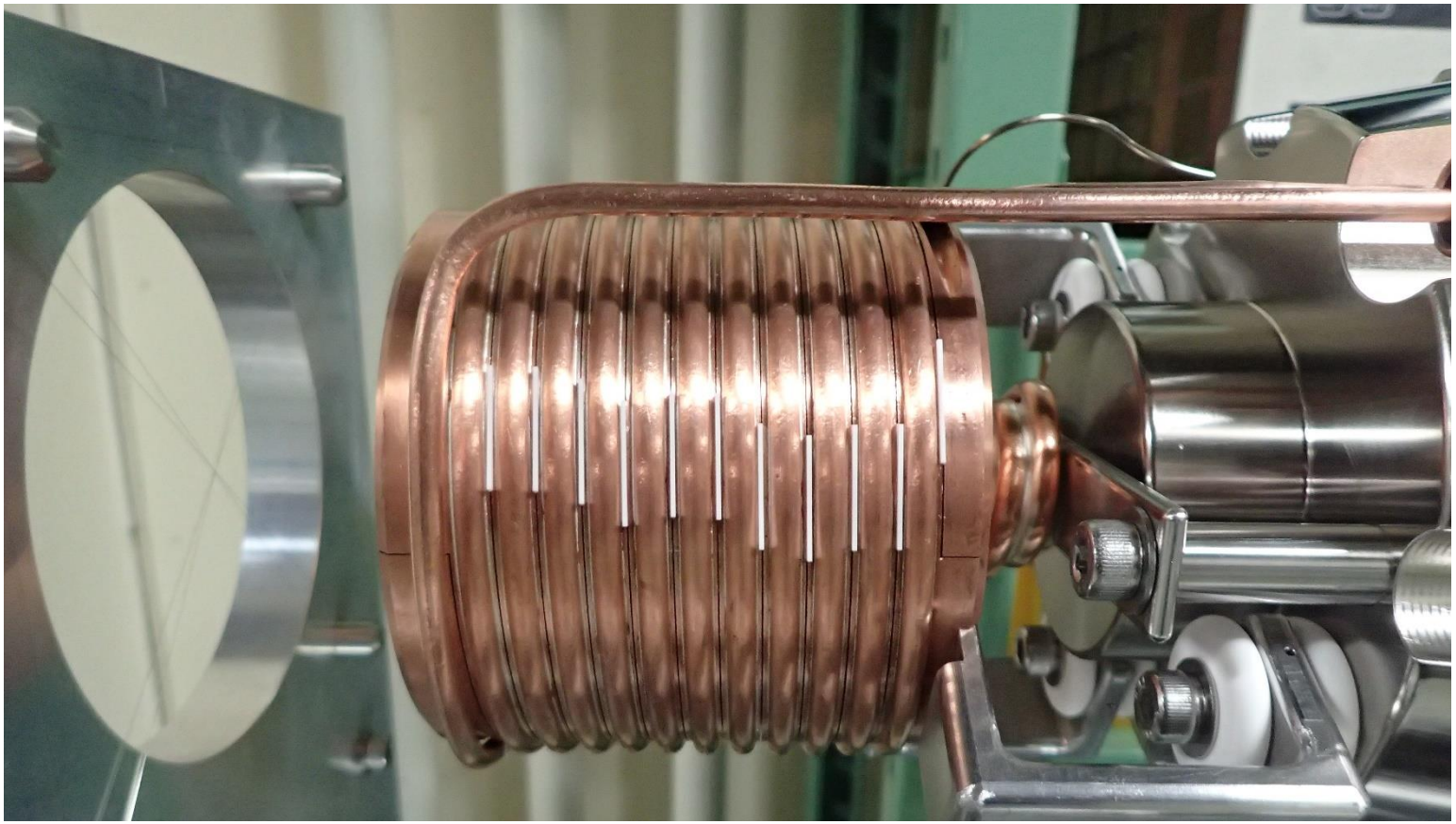

20mm x 25mm x 0.2mm or 0.3 mm Zirconia (ZrO_2) plates are inserted from 3 direction

It works well but not perfect
→discharge decreased but happened
→further investigation is needed

Short summary 1

- Be care about yield strength after brazing
- New Cu alloy NC 50 has promising properties
- Preliminary test shows very good result
- Insertion of ceramic plate works well
  - Further investigation is needed

OUTLINE

- Introduction of SuperKEKB positron source
- lesson 1 : avoid deformation of FC head
  - Solution 1 : new material for FC head
- lesson 2 : compensate deformation of magnetic field
  - Solution 2 : BPM and steering coils inside solenoid
- lesson 3 : decrease voltage on FC head
  - Solution 3 : LCR measurement and control
- upgrade plan

Solenoid field issue

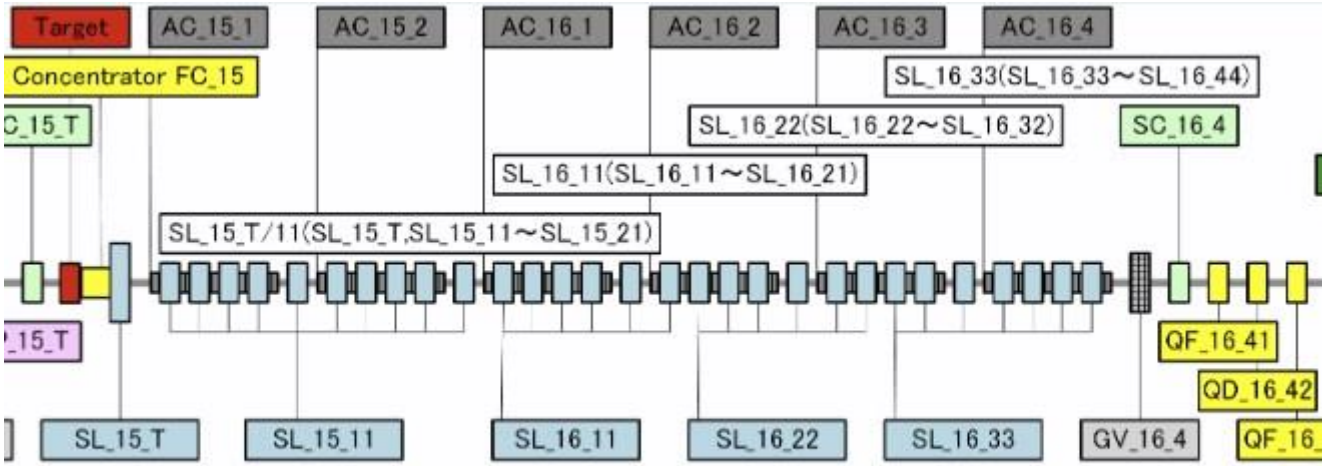

Design	600 A	650 A	650 A	650 A	650 A
present	600 A	600 A	400 A	400 A	650 A

Solenoid section consists of 30 solenoid coils.
They are connected in 5 groups.
Each group is energized by independent power supply.

Design value and present value tuned to maximize positron yield is different

Solenoid field issue

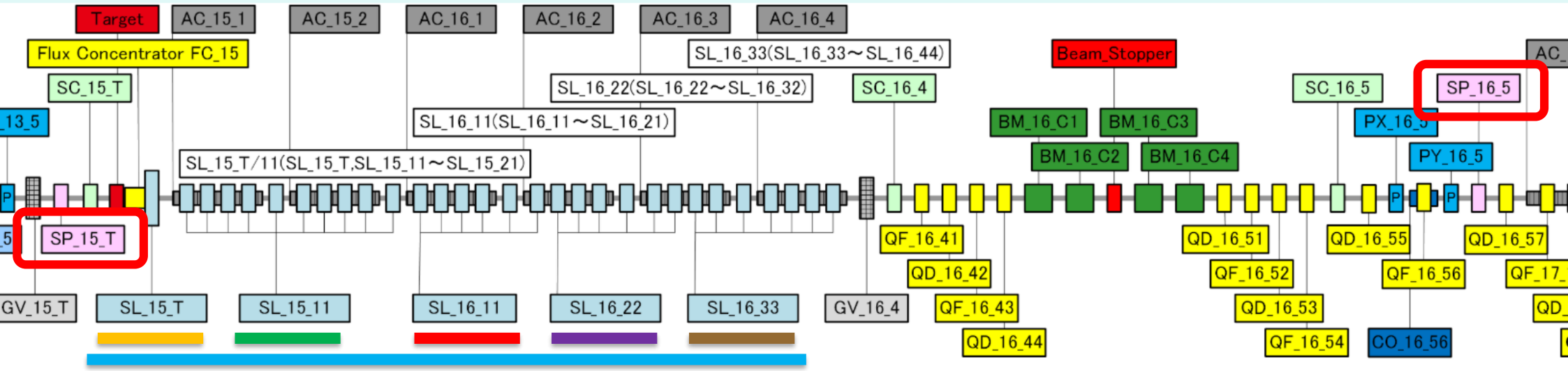

Measured by T. Kamitani

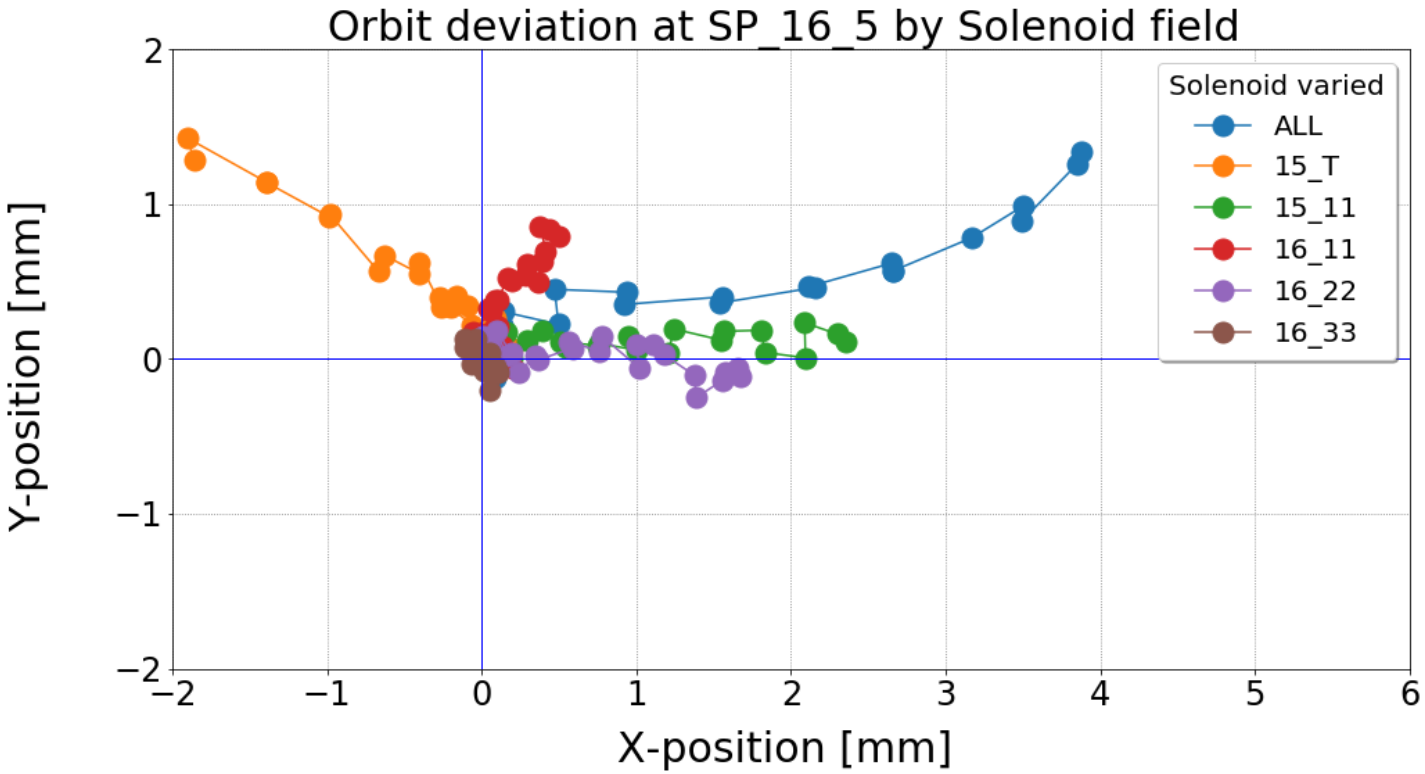

Measurement of deflection amount of 3 GeV electron beam by asymmetric field in solenoid section

1,Prepare ballistic beam between SP_15_T and SP_16_5

2,Energize a part of solenoid by 1/10* max. value step.

3, Monitor beam position at SP_16_5

Present layout

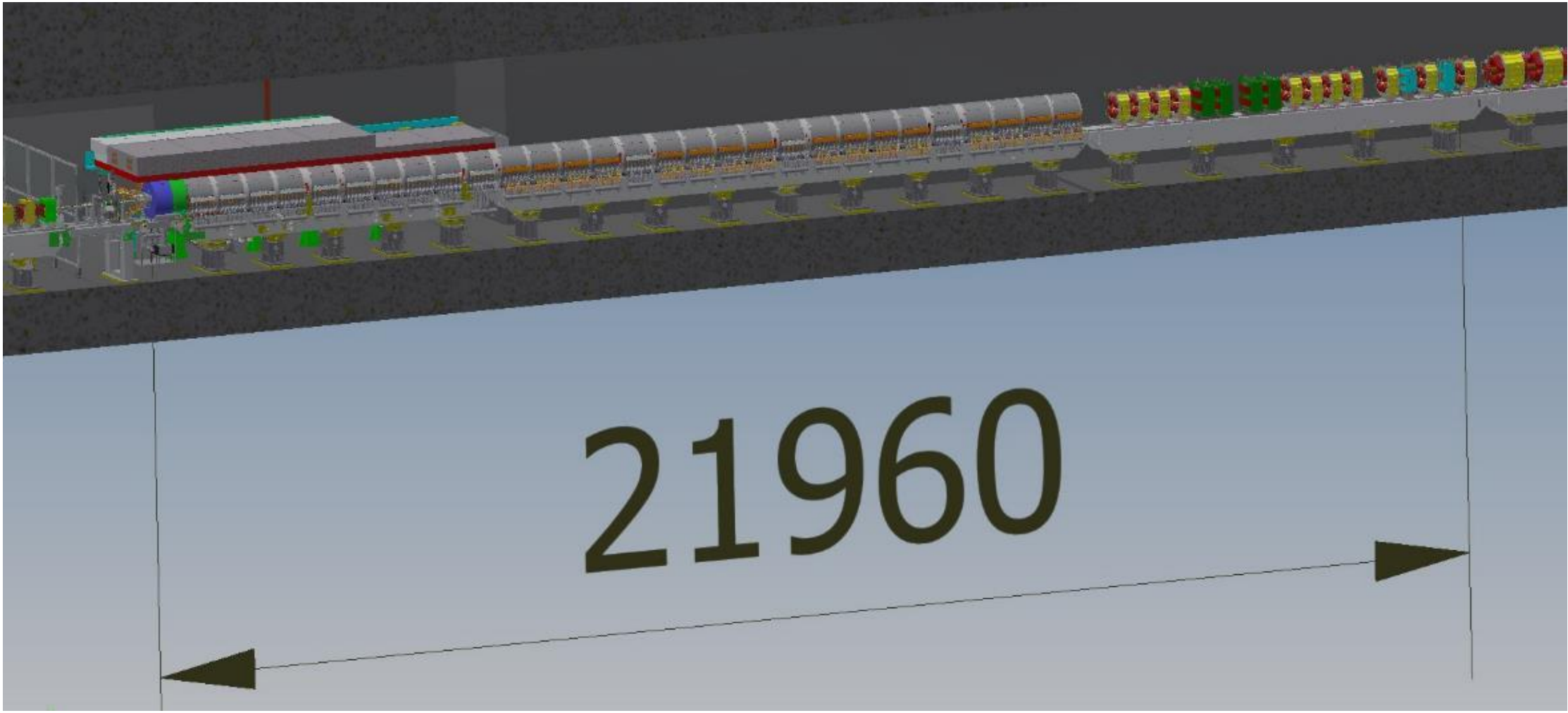

target

BPM and 1st steering

BPM and steering coils inside solenoid

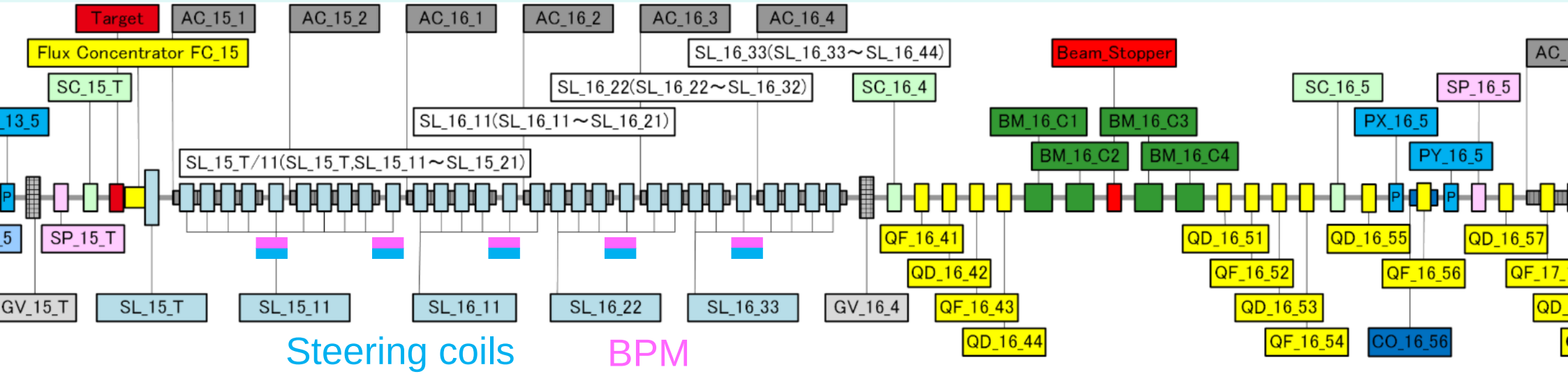

Install steering coils and BPM in solenoid section.
Detailed simulation of magnetic field by CST is also in progress

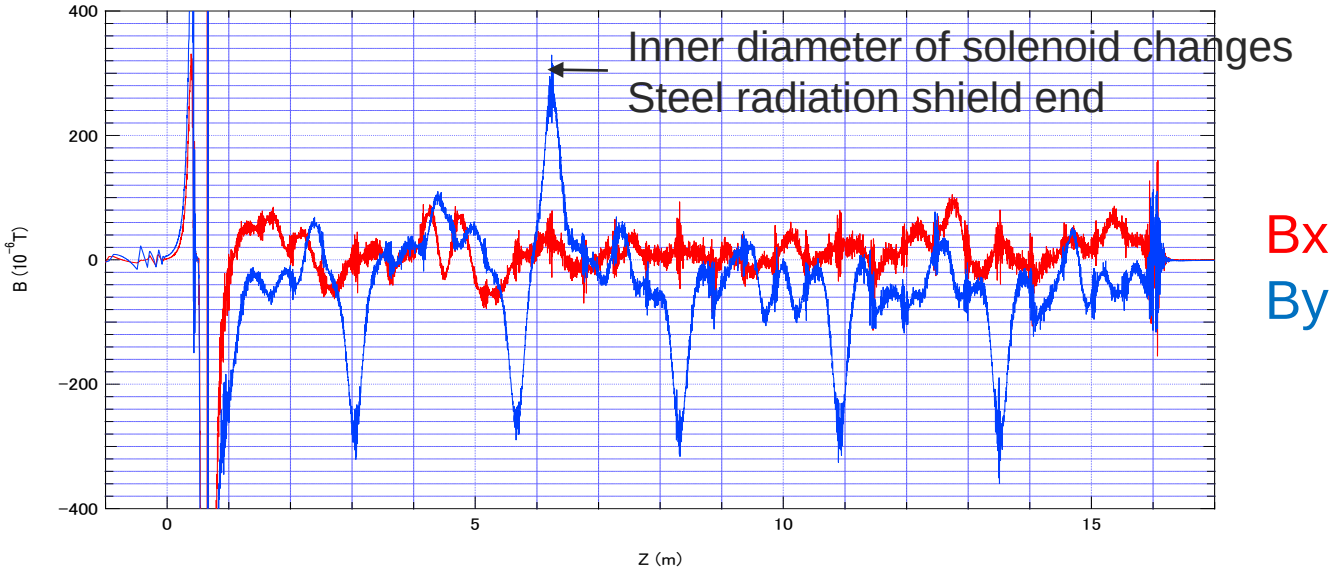

- It is not possible to use BPM for positron beam before separation.
- Use electron beam as a probe for magnetic field
- Development of a Fast BPM which can dissolve λ/2 @ S-band is under cosideration

Asymmetry of magnetic connection

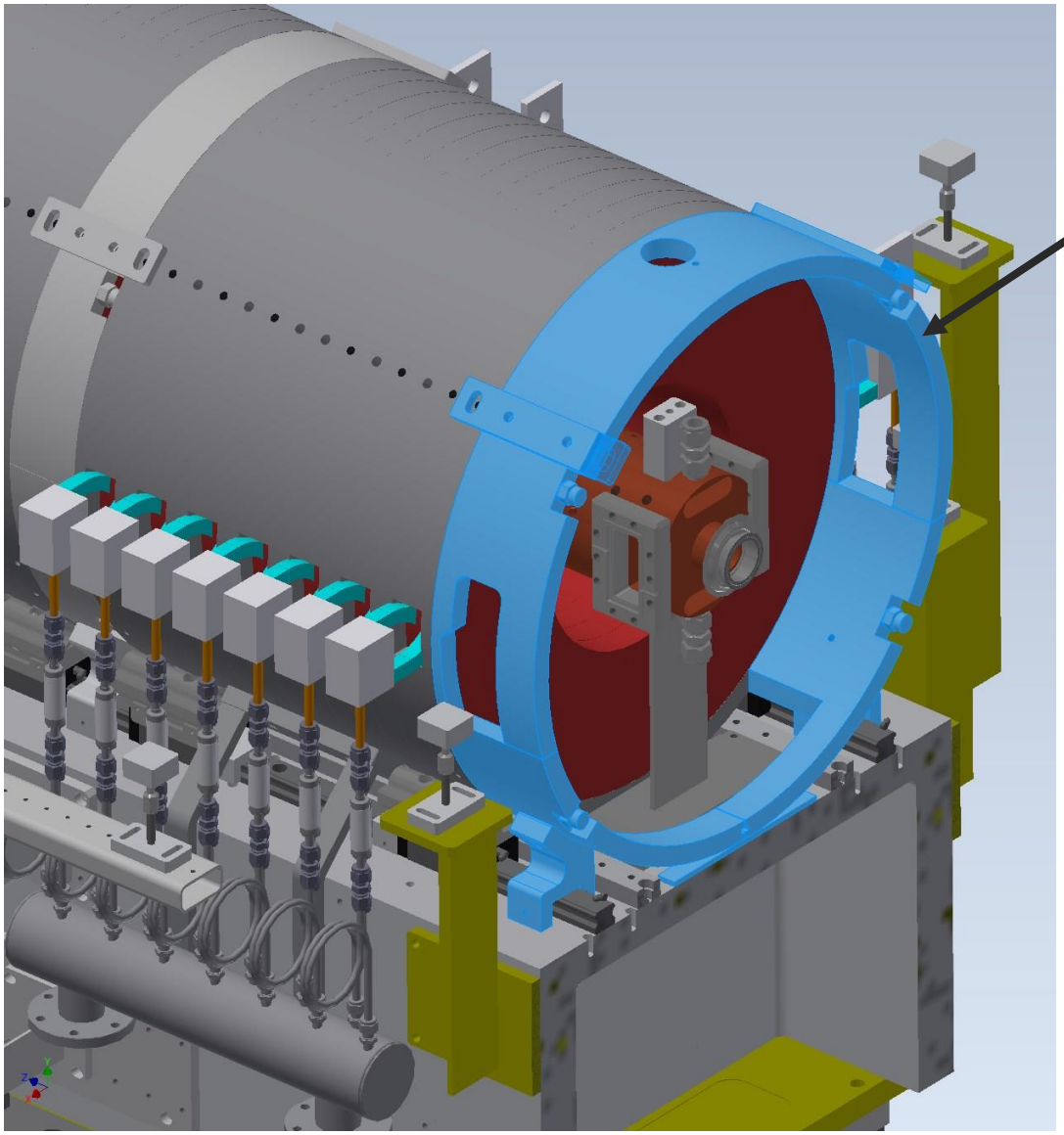

Iron yoke to connect flux of solenoid
need space for waveguide and support

BPM and steering coils inside solenoid

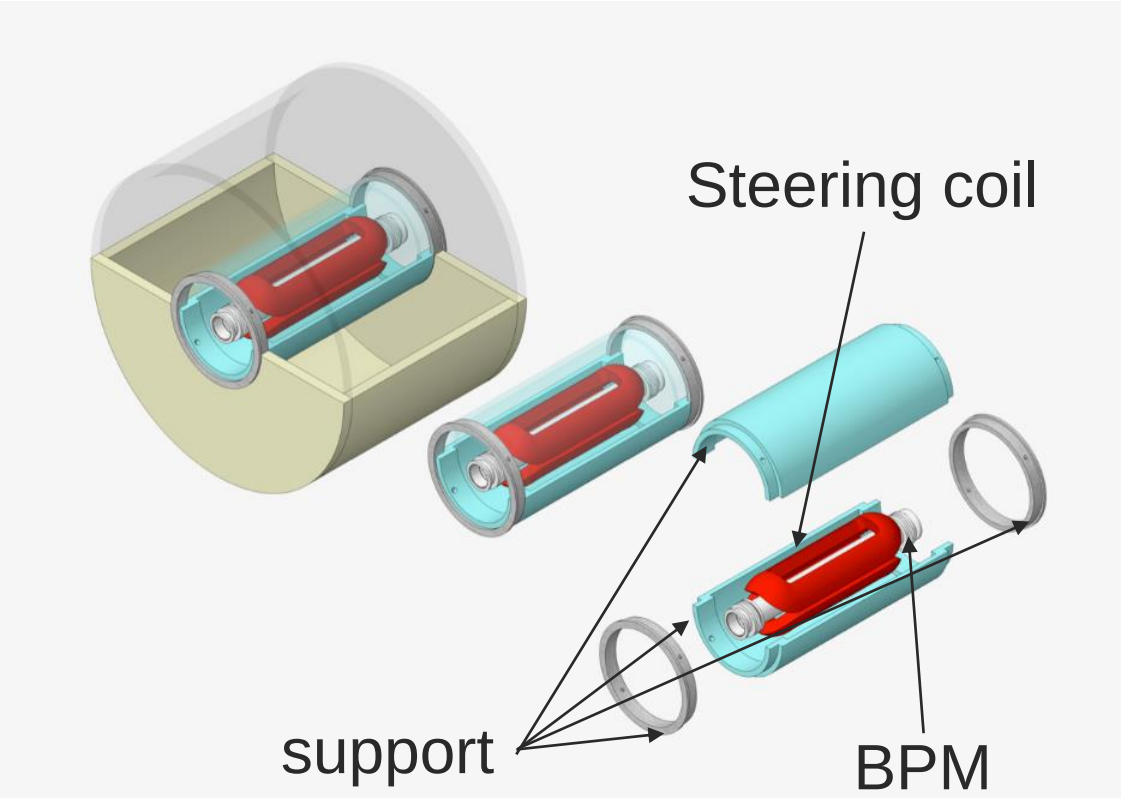

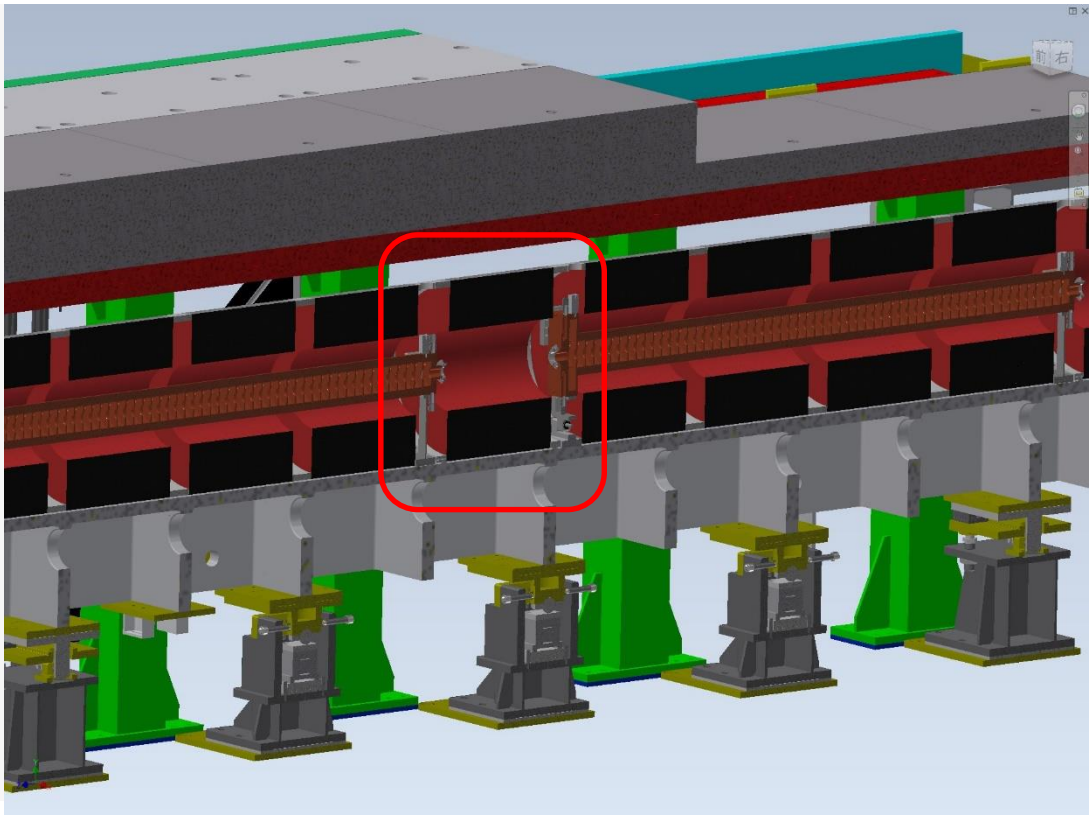

K. Yokoyama

Very limited space
Design is in progress
In max. plan, between Acc. structures
  Install 3 horizontal, 2 vertical steering coils
  Install 5 BPM

Short summary 2

- Asymmetry of iron yoke might affect magnetic field.
- 3 GeV electron beam is deflected in solenoid section.
- No direct measurement for positron but expected to be deflected.
- Correction and monitor in the solenoid section is important
- Fast BPM to measure positron directly is under consideration
  - Such monitor will be useful for future positron source

OUTLINE

- Introduction of SuperKEKB positron source
- lesson 1 : avoid deformation of FC head
  - Solution 1 : new material for FC head
- lesson 2 : compensate deformation of magnetic field
  - Solution 2 : BPM and steering coils inside solenoid
- lesson 3 : decrease voltage on FC head
  - Solution 3 : LCR measurement and control
- upgrade plan

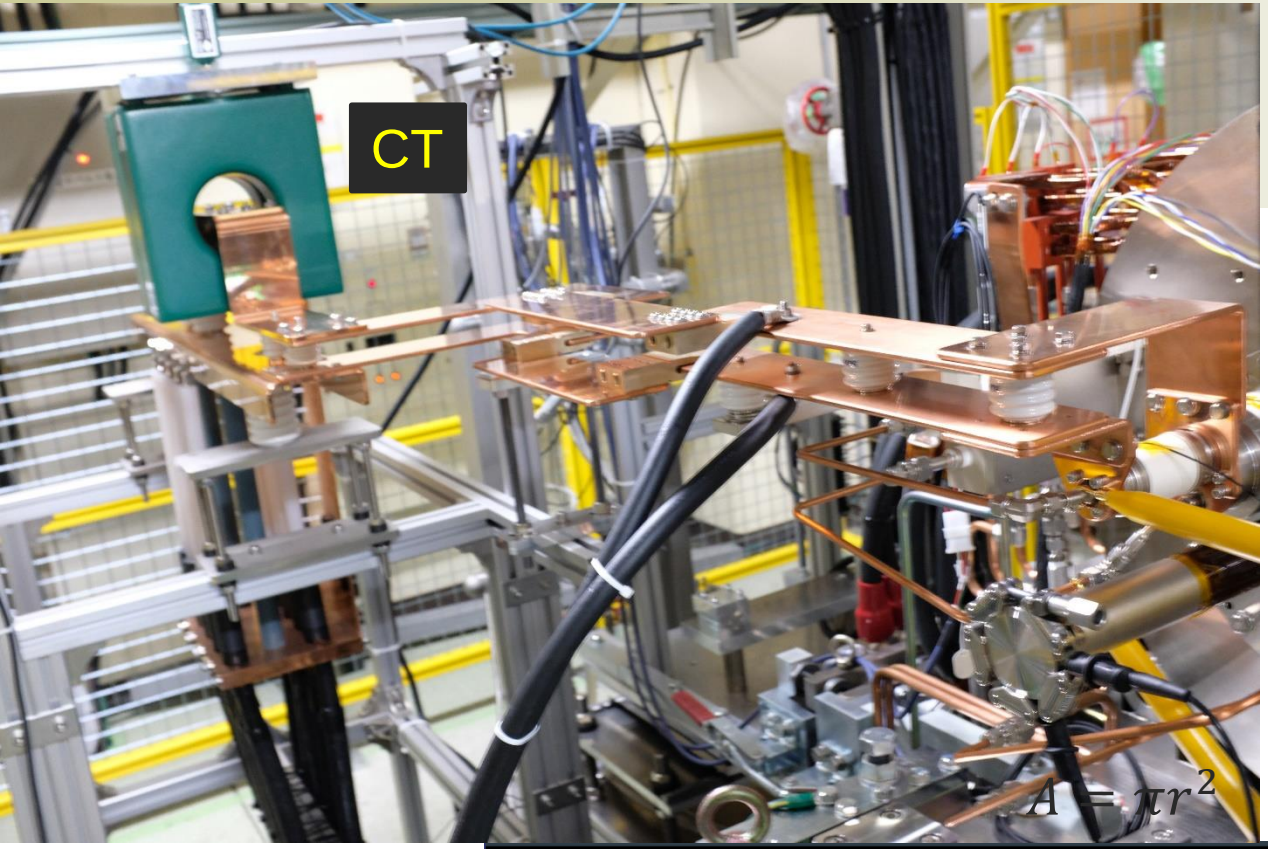

$$V \sim L \frac{dI}{dt}$$

High voltage probe

~3MHz
Due to resonance by capacitance of the cable and inductance of the load

High voltage probe

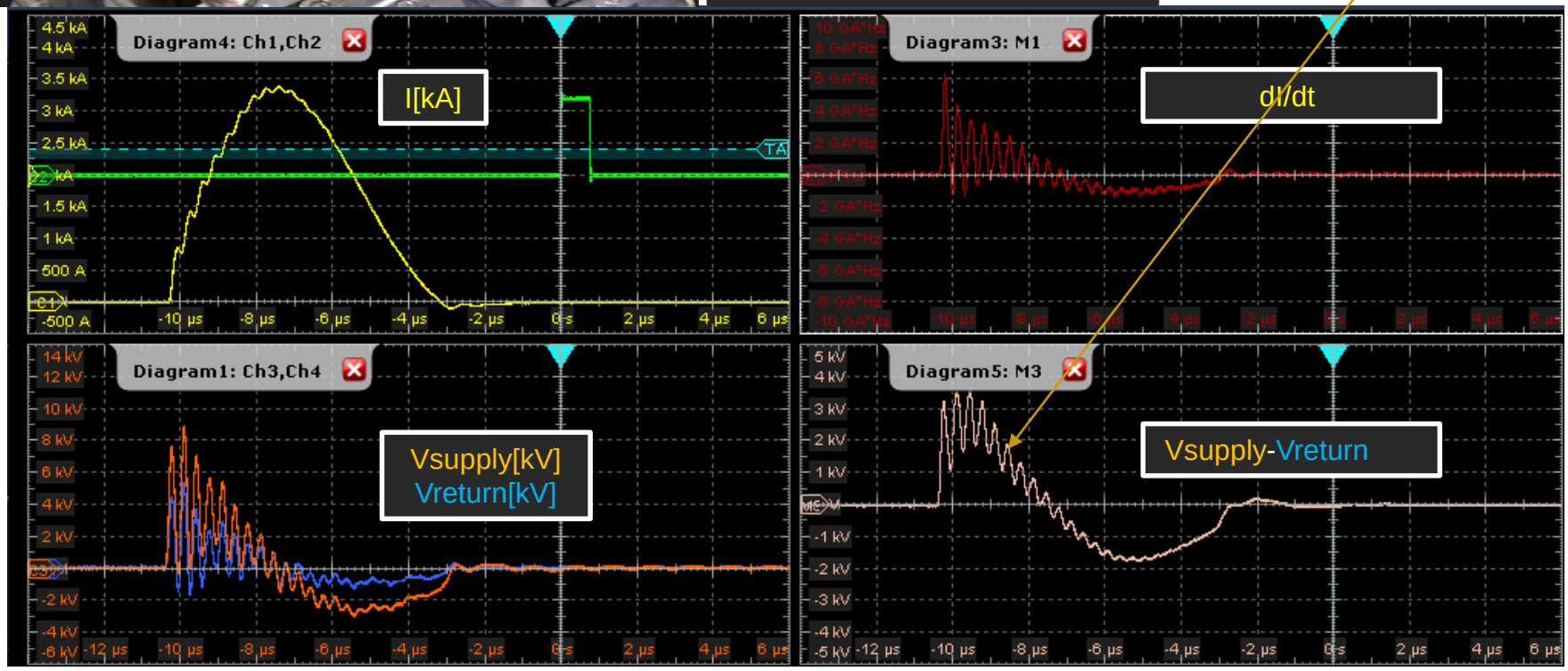

Snubber circuit

Avoid discharge
→Reduce electric field between gap
→Reduce voltage keeping current
→suppress rapid current change

$$V \sim L\frac{dI}{dt}$$

Pulsed power supply

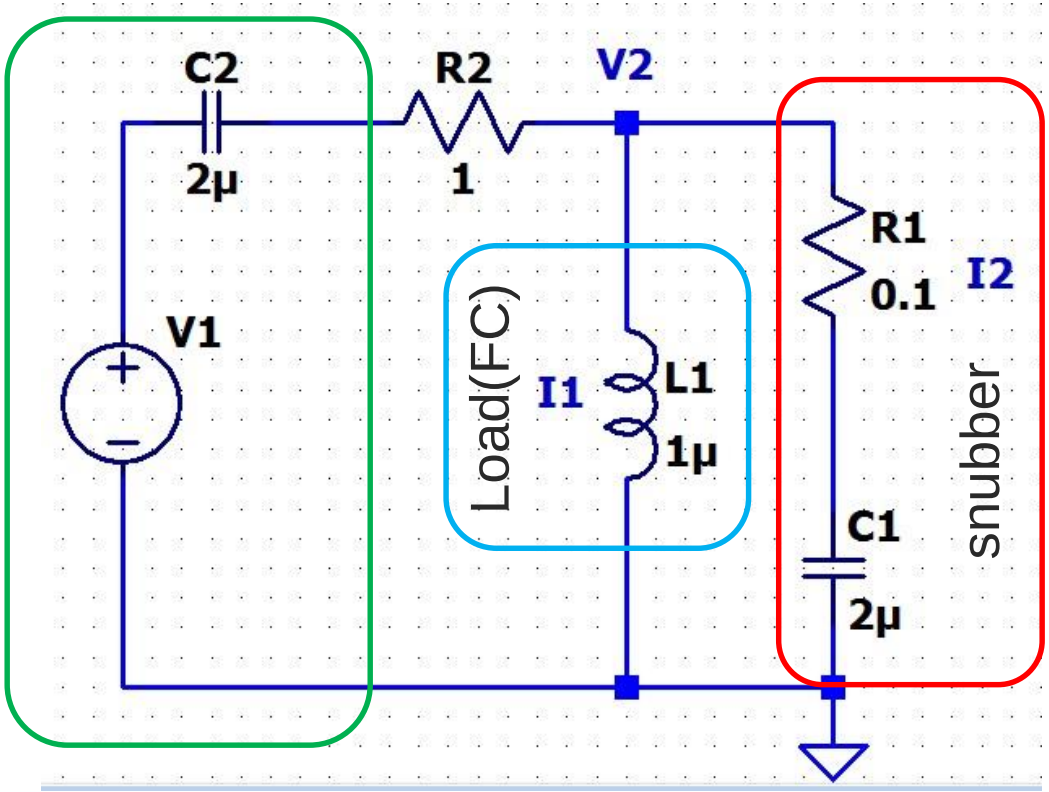

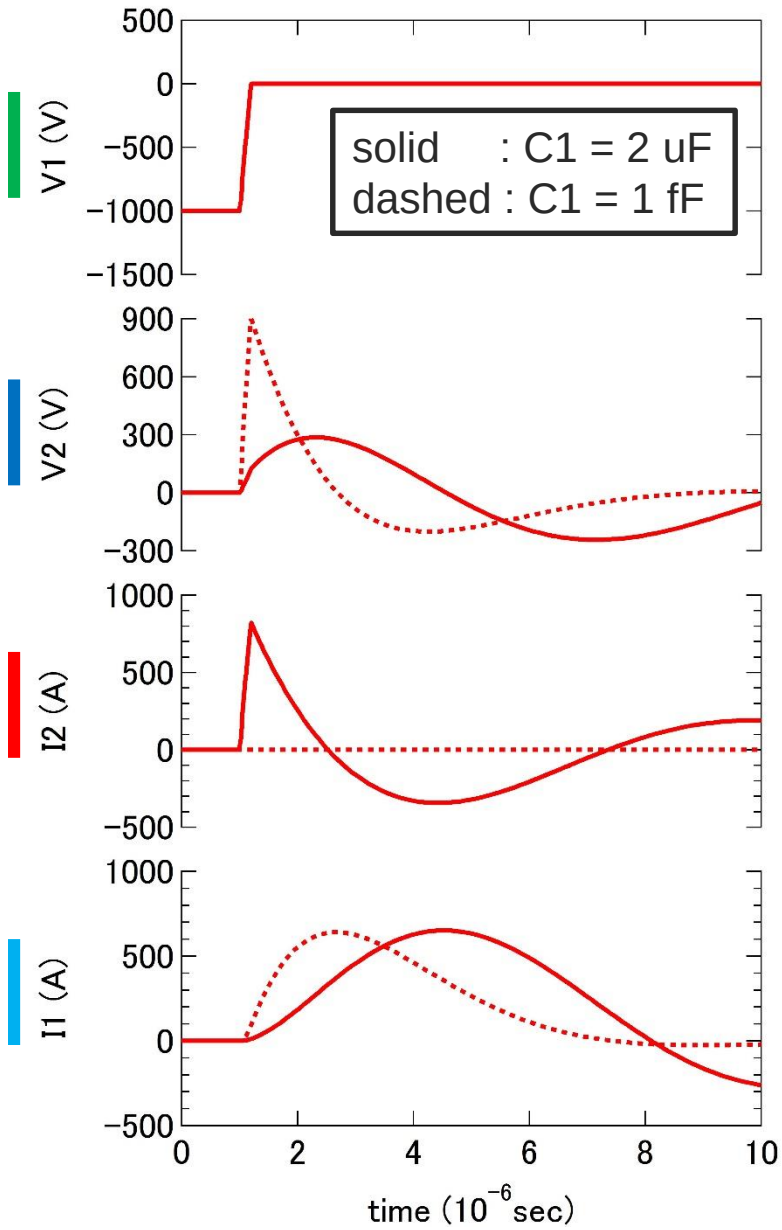

Current and voltage waveform w or w/o snubber circuit

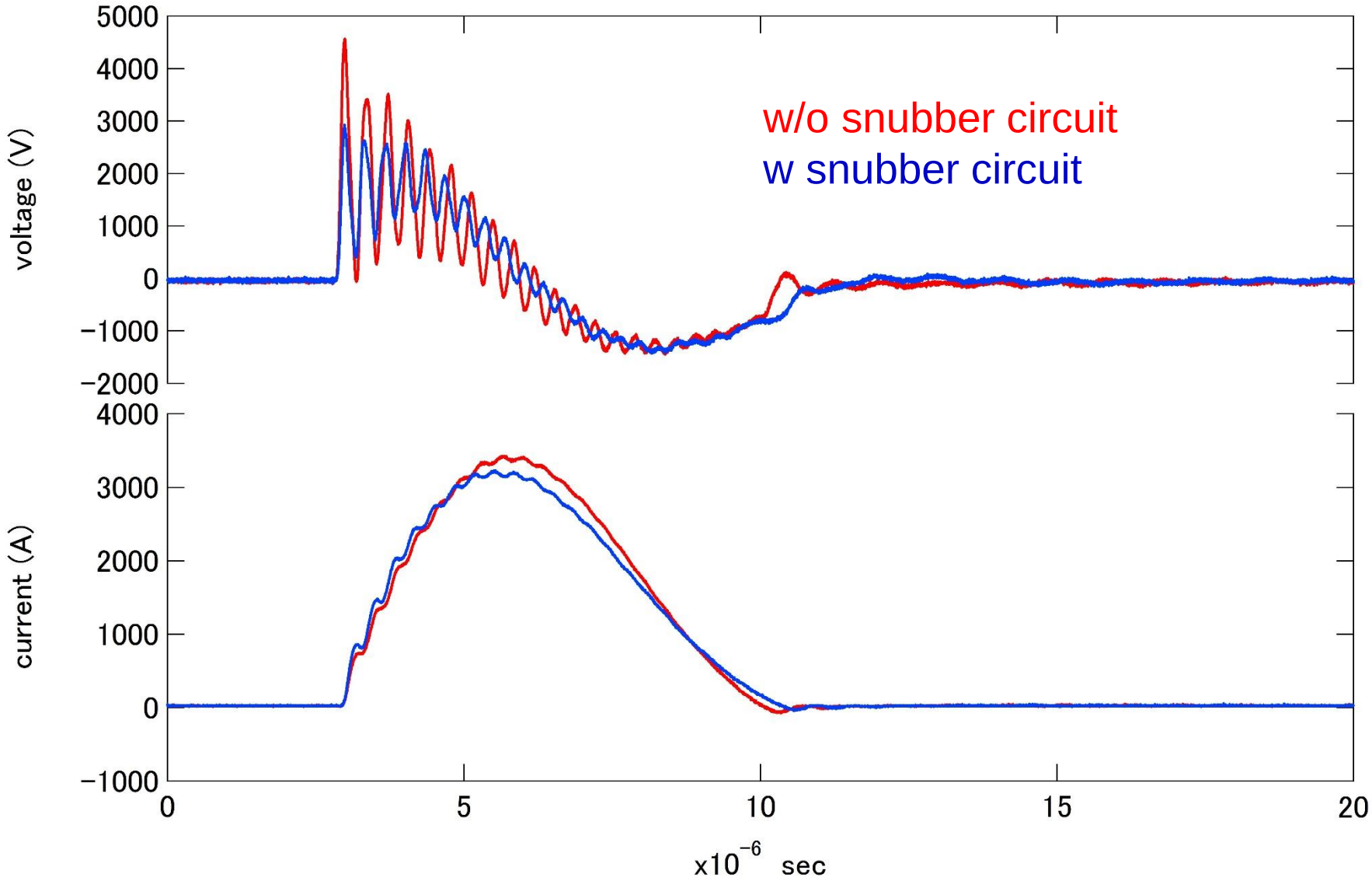

Frequency response of capacitors

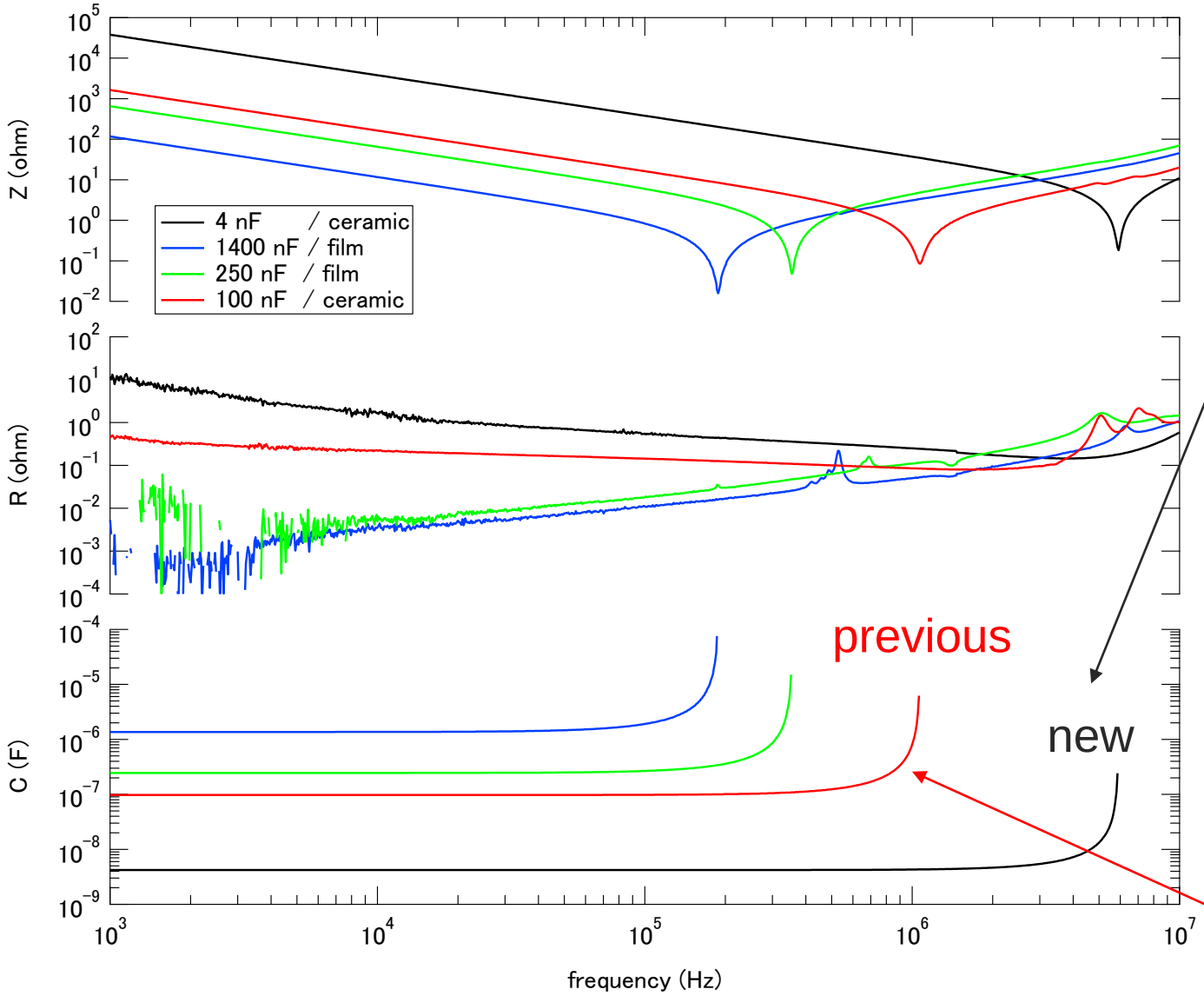

Optimization of the snubber circuit

Es = 5 kV
IFC = 3.5 kA

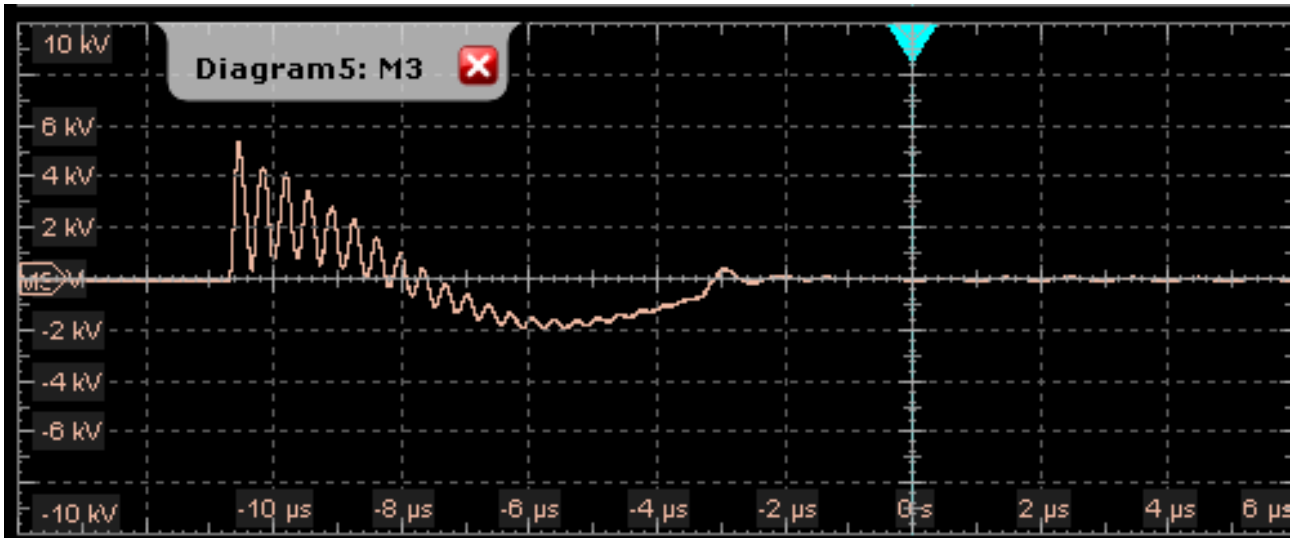

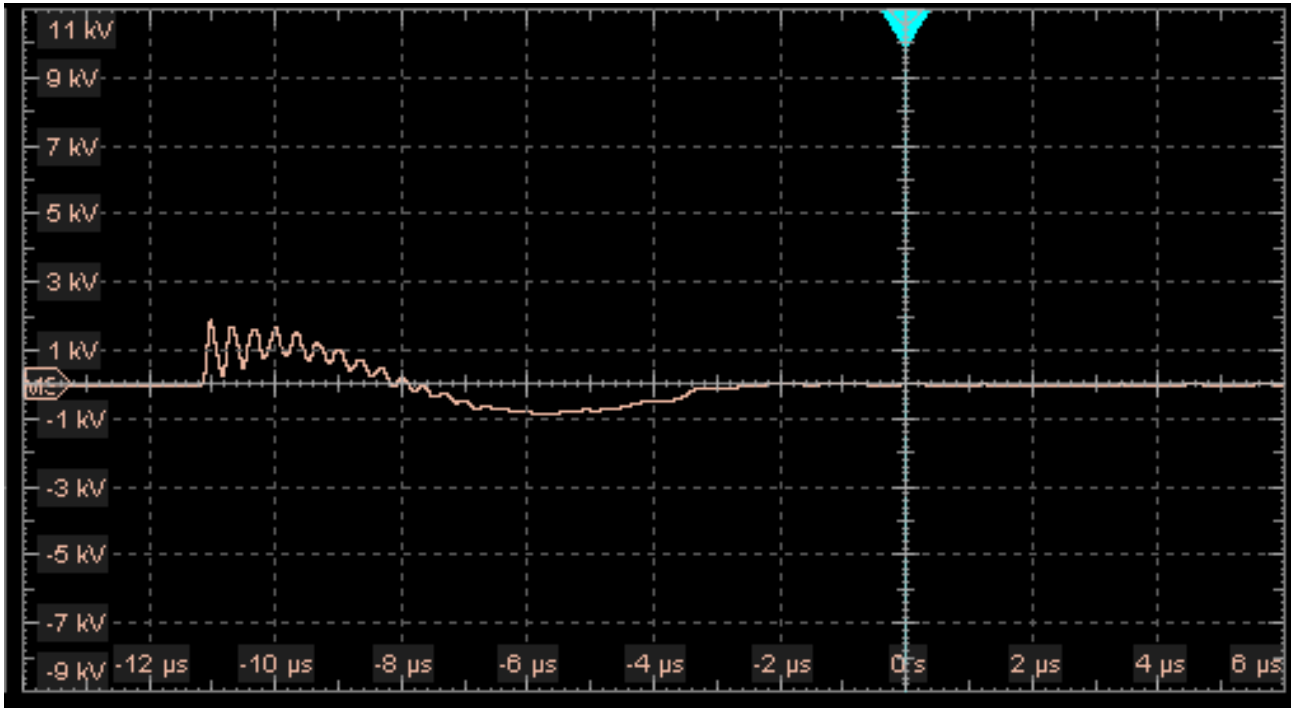

Insertion of series inductance

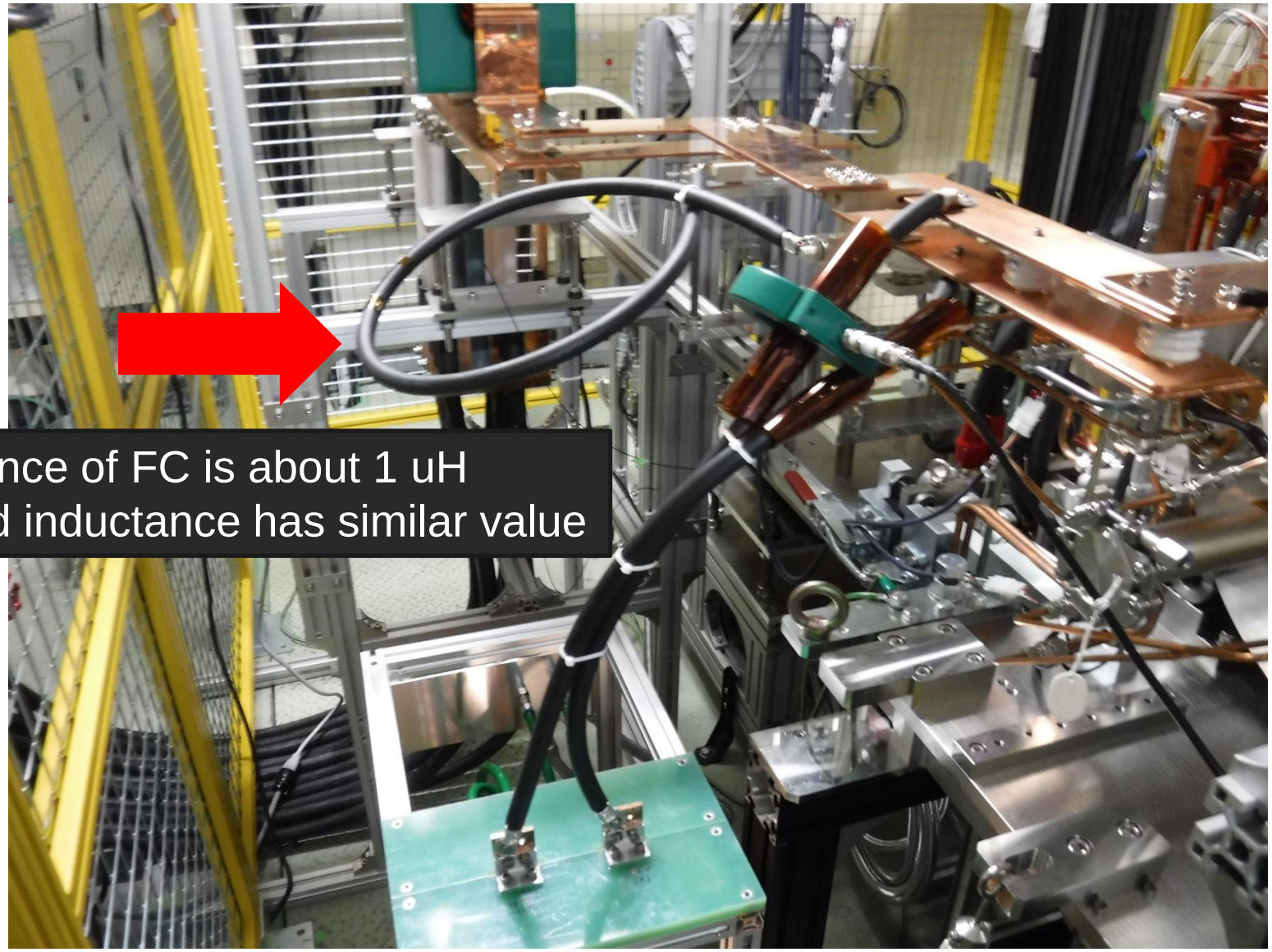

Inductance of FC is about 1 uH
Inserted inductance has similar value

Insertion position of inductance

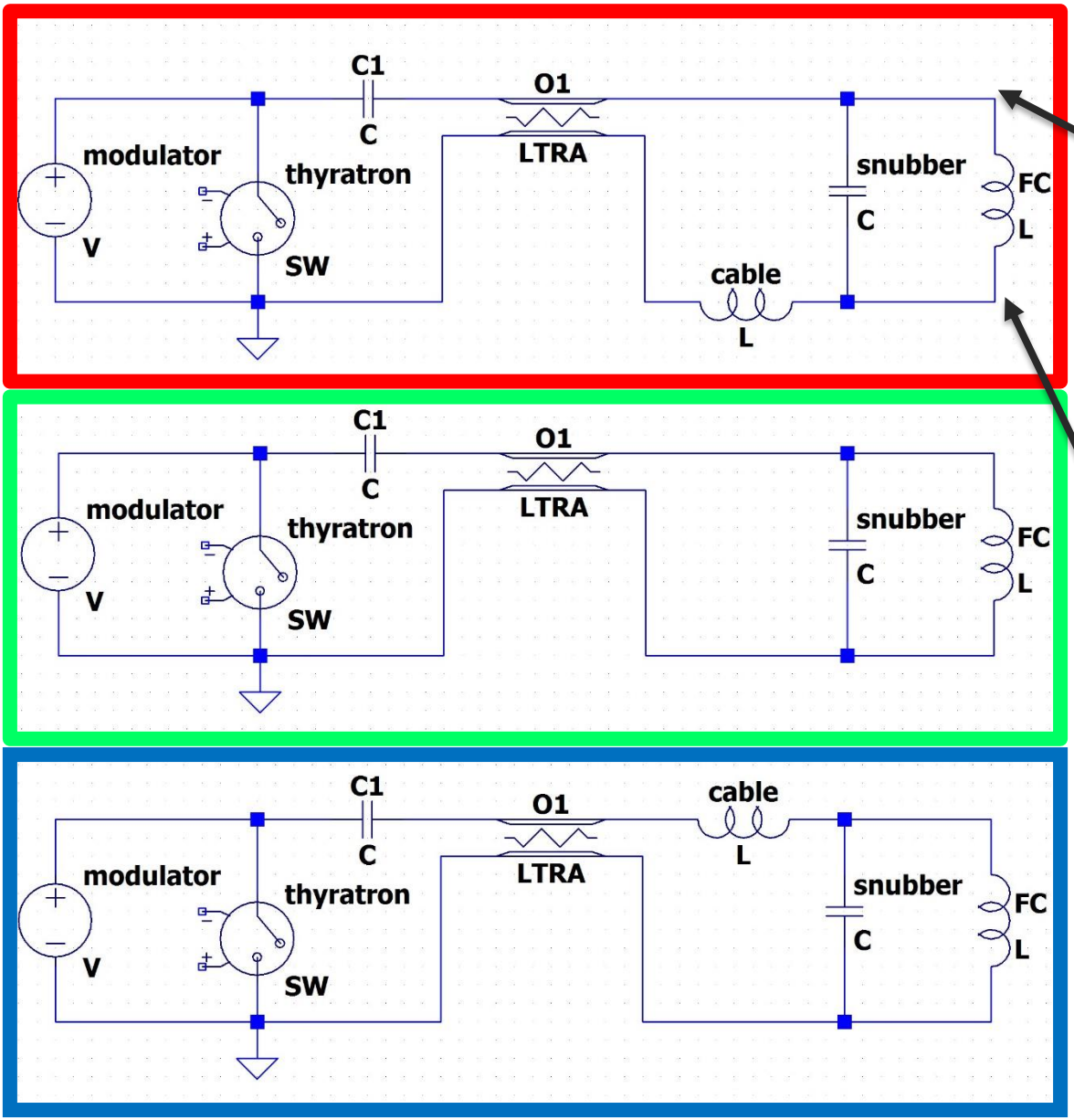

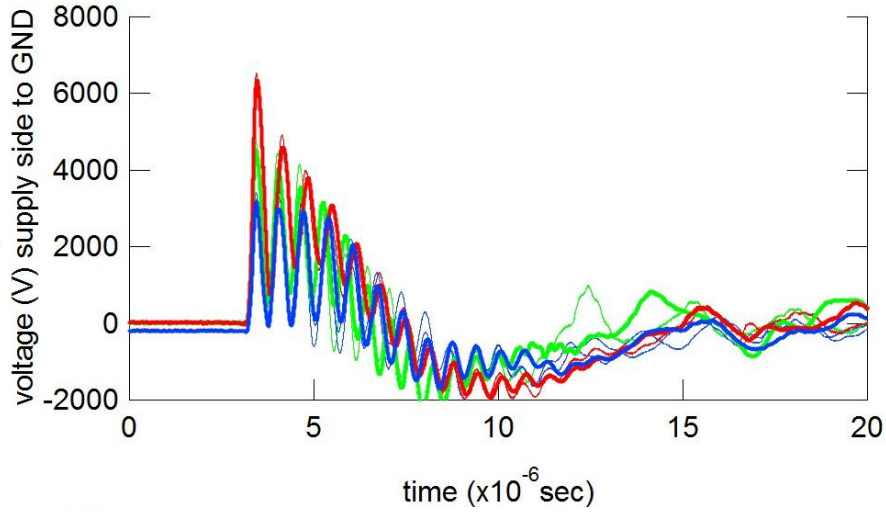

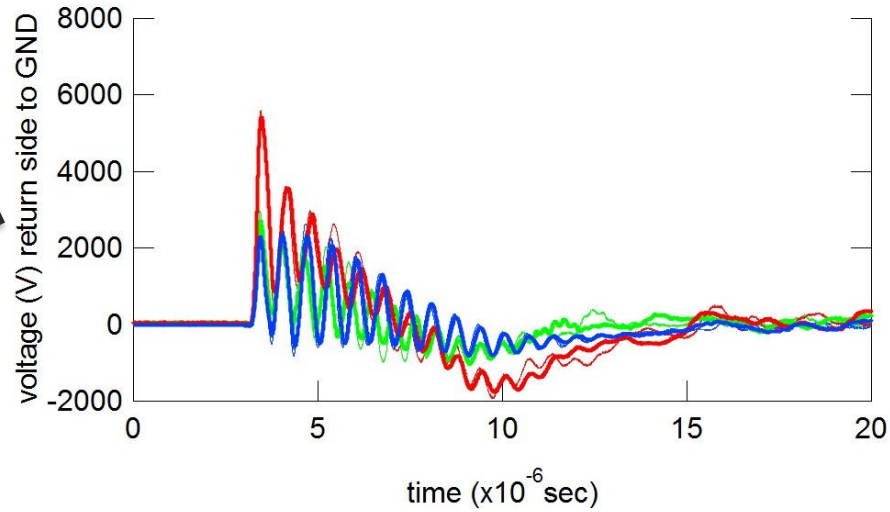

L=H : insert L in return side

L=0 : without L

L=L : insert L in supply side

Insertion position of inductance

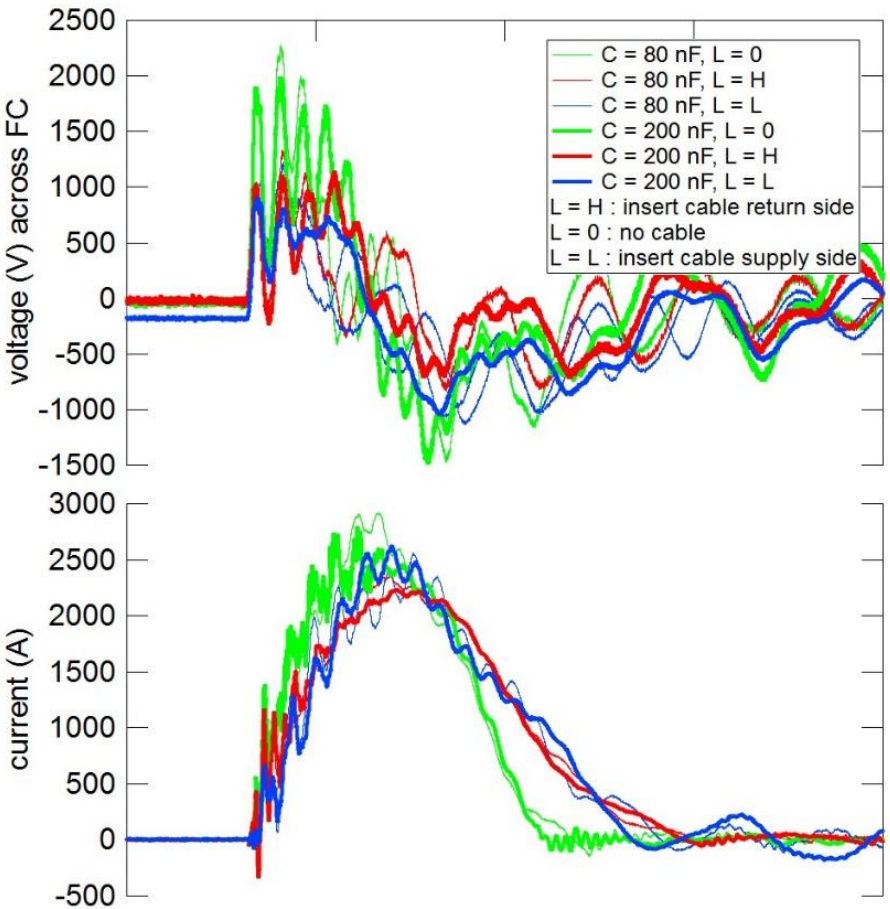

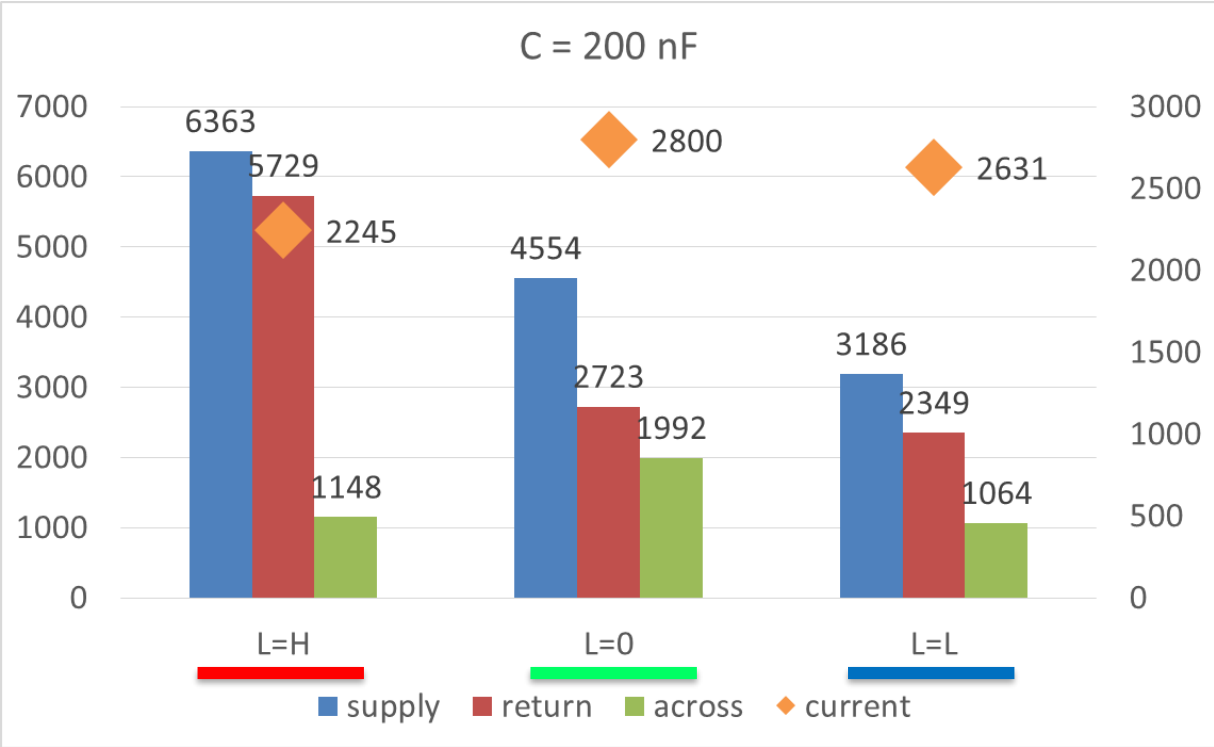

L=H : insert L in return side

L=0 : without L

L=L : insert L in supply side

Without L and C

FC voltage	FC current	Snubber current	I/V (FC)	V/Es
1148	2245	356	1.96	0.230
1217	2800	375	1.41	0.398
2083	2631	394	2.47	0.213
2561	2792	/	1.090	0.512

Optimization of the snubber circuit

Circuit simulation

Simulation by T. Natsui

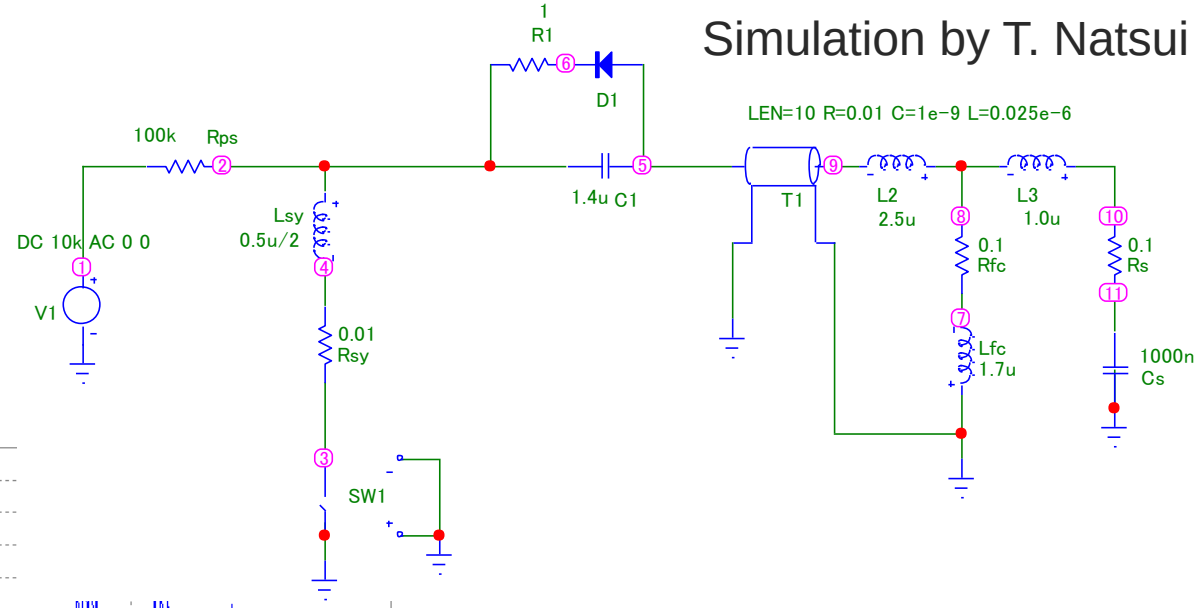

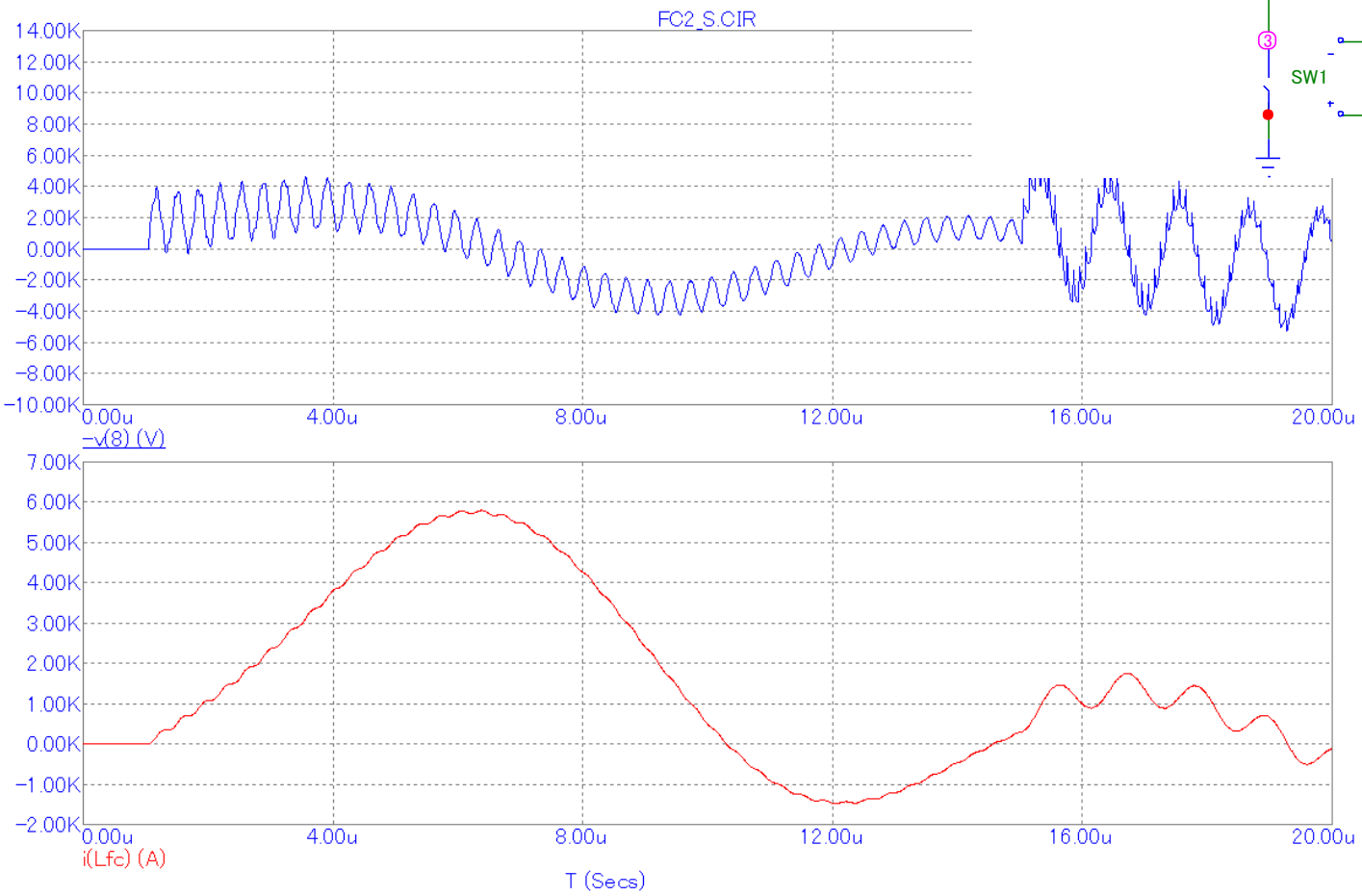

Optimization of the snubber circuit

LCR measurement

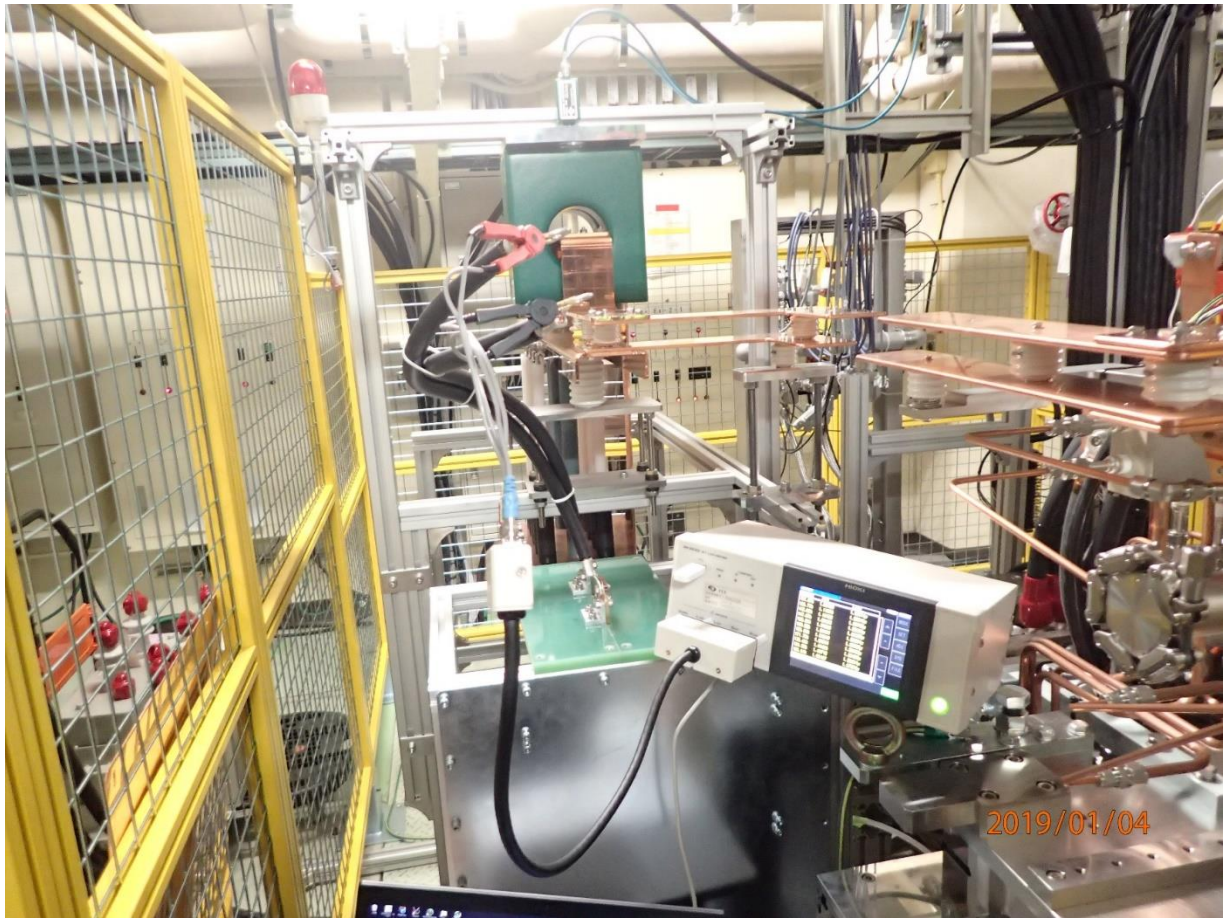

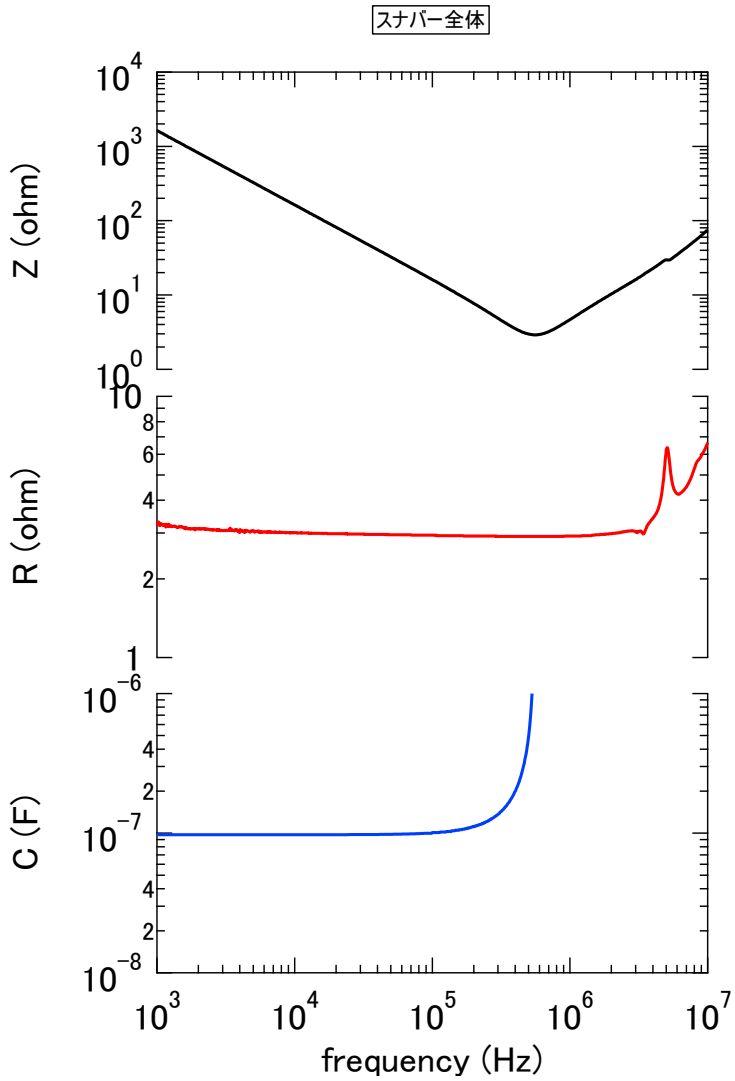

Short summary 3

- Load (FC) and power supply, transmission line, external circuit (snubber) should be designed as a system.
- Circuit simulation, LCR measurement and voltage current monitor is important to reduce voltage across the FC.

OUTLINE

- Introduction of SuperKEKB positron source
- lesson 1 : avoid deformation of FC head
  - Solution 1 : new material for FC head
- lesson 2 : compensate deformation of magnetic field
  - Solution 2 : BPM and steering coils inside solenoid
- lesson 3 : decrease voltage on FC head
  - Solution 3 : LCR measurement and control
- upgrade plan

Upgrade plan

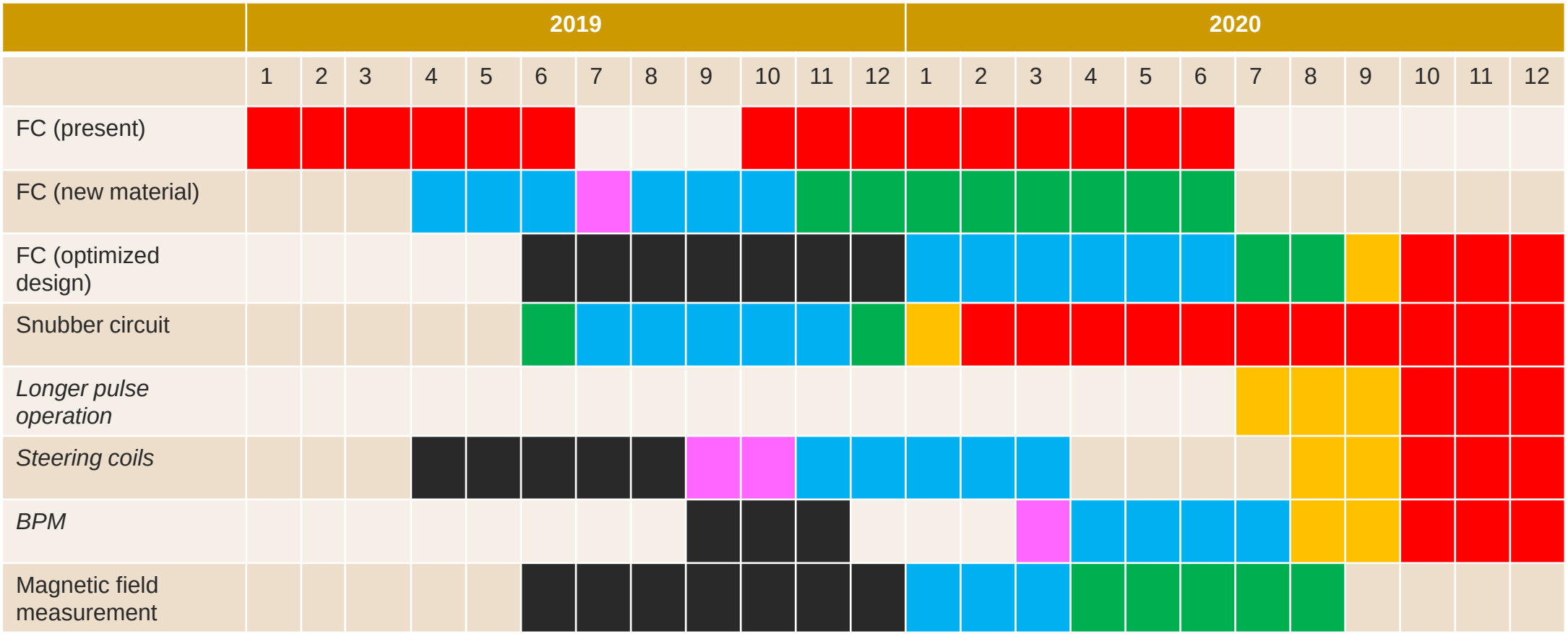

Operation
Design
Test
Biding
Manufacturing
Installation

We are planning big upgrade of positron source in 2020 summer shutdown.
budget is one of the concern…..

Other topics

- Deformation of magnetic field by return yoke before target
  - Material consideration
  - Simulation and beam measurement
- Vibration measurement and resonance frequency
- Temperature distribution simulation and measurement of the FC head