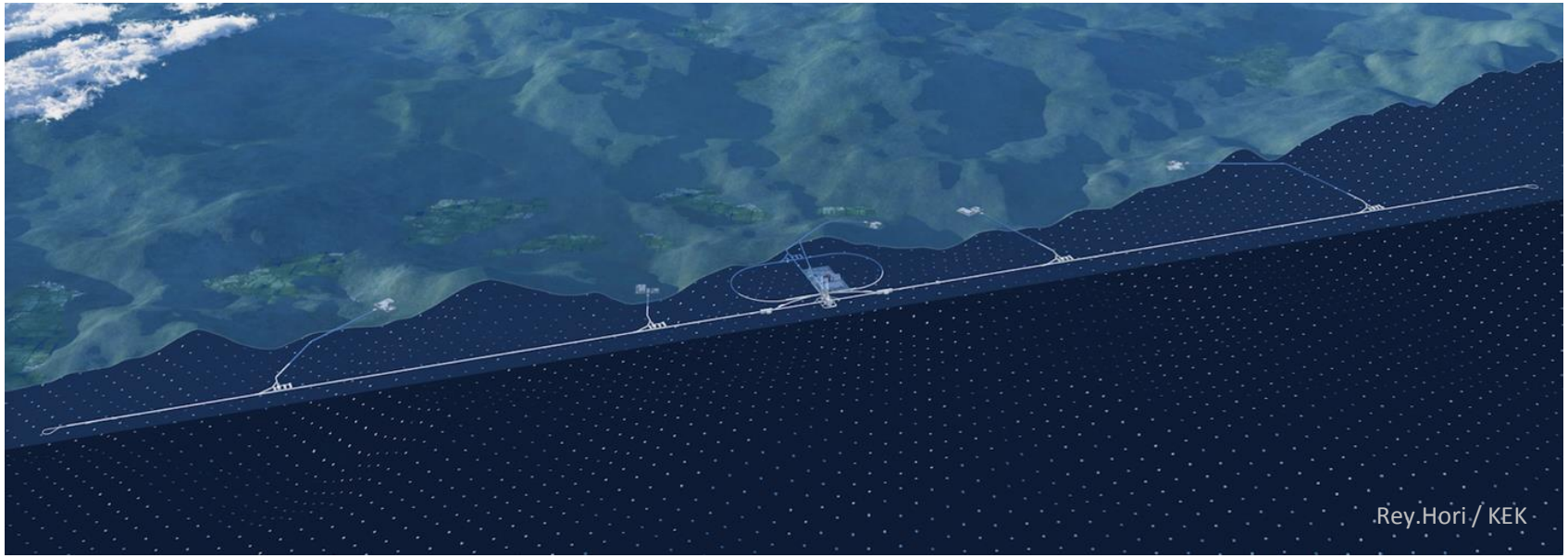

Progress of Civil Engineering Design

Nobuhiro Terunuma, KEK

On behalf of the CFS group

Background of Civil Engineering Design

- Design of accelerator tunnels and detector hall has been conducted by the international working groups under GDE and LCC.
- **Site specific design**, especially for facilities on ground and its connection to the accelerator, has been conducted by the working group under the Tohoku ILC planning office.
- **Comprehensive civil engineering integration** is underway by the CFS team from KEK and Tohoku ILC planning office. The draft will be discussed with the international ILC-CFS working group.

We are collecting and integrating drawings for the CFS basic plan.

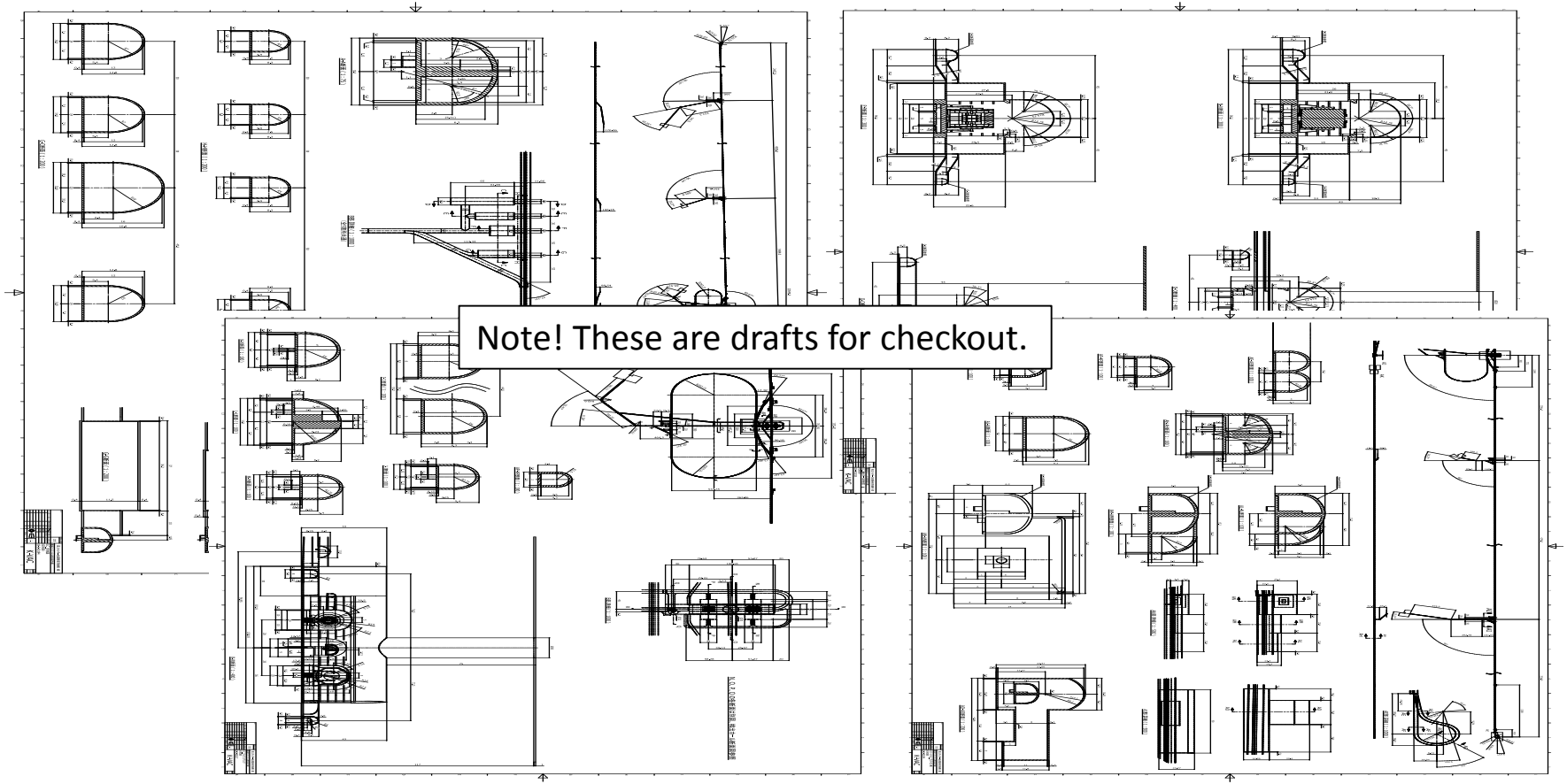

Some slides are selected from recent workshops.

- H. Hayano, CFS session of AWLW2018, Fukuoka
  "ILC 250GeV overall tunnel design"
- T. Sanuki, CFS session of ALCW2018, Fukuoka
  "Tunnel floor vibration issue"
- H. Hayano, CFS session of LCWS2017, Strasburg
  "Kitakami-site-specific CFS Study update"
- H. Hayano, CFS session of AWLC2017, SLAC
  "ILC Utility Design Study for Kitakami-site"
- T. Omori, Positron Source session of LCWS2018, Arlington
  "ILC tunnel lengths & Commissioning with E-driven e+ source and, a Proposal of the separate tunnel for the e+ source"
- N. Terunuma, CFS session of ALCW2018, Fukuoka
  "CFS consideration on the Main Dump and around"
- H. Hayano, CFS session of LCWS2018, Arlington
  "Dump room insertion into ILC tunnel"

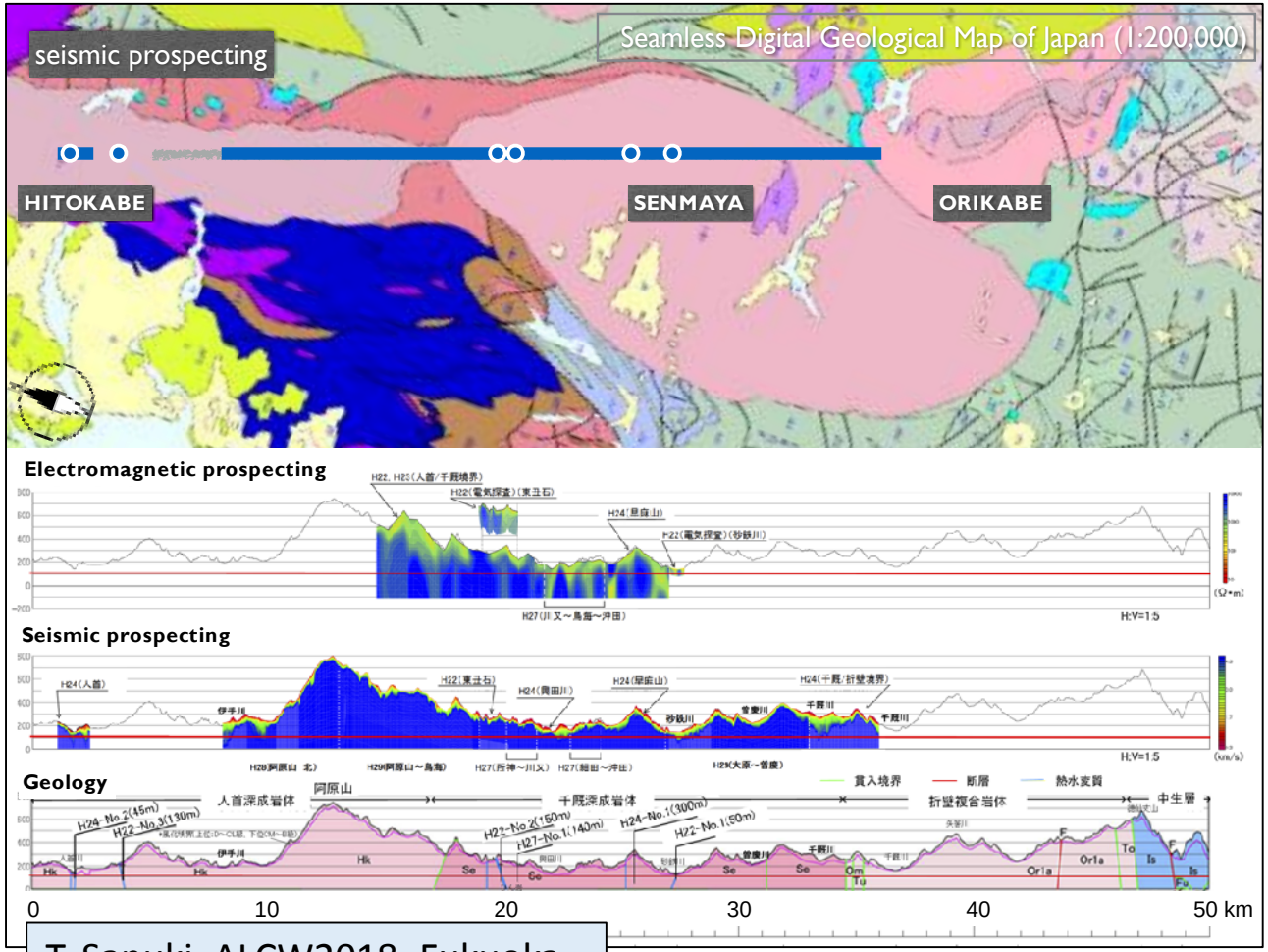

ILC's location is selected in the region where **granite** is **continuous** in anticipation of future **extension to 50km.**

The accelerator will be built in the Kitakami Mountains, at an **altitude of 110m.**

Seismic prospecting has been conducted **over the entire area of ILC-250.**

As well as seismic prospecting, **site investigation cores** have been drilled.

T. Sanuki, ALCW2018, Fukuoka

ILC-250 option-A

Shortest ML tunnels

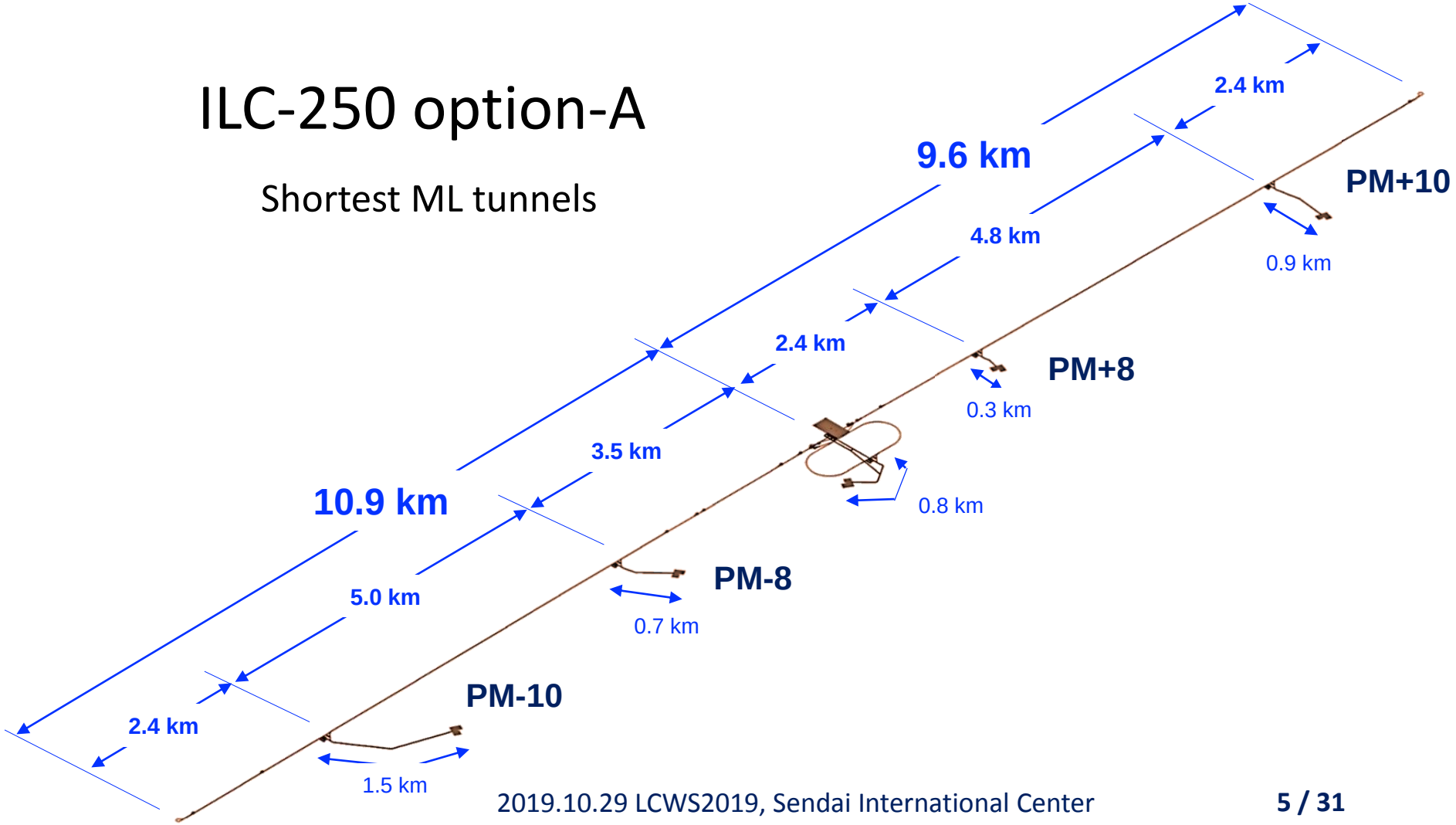

Plan of ILC-250GeV construction in TDR

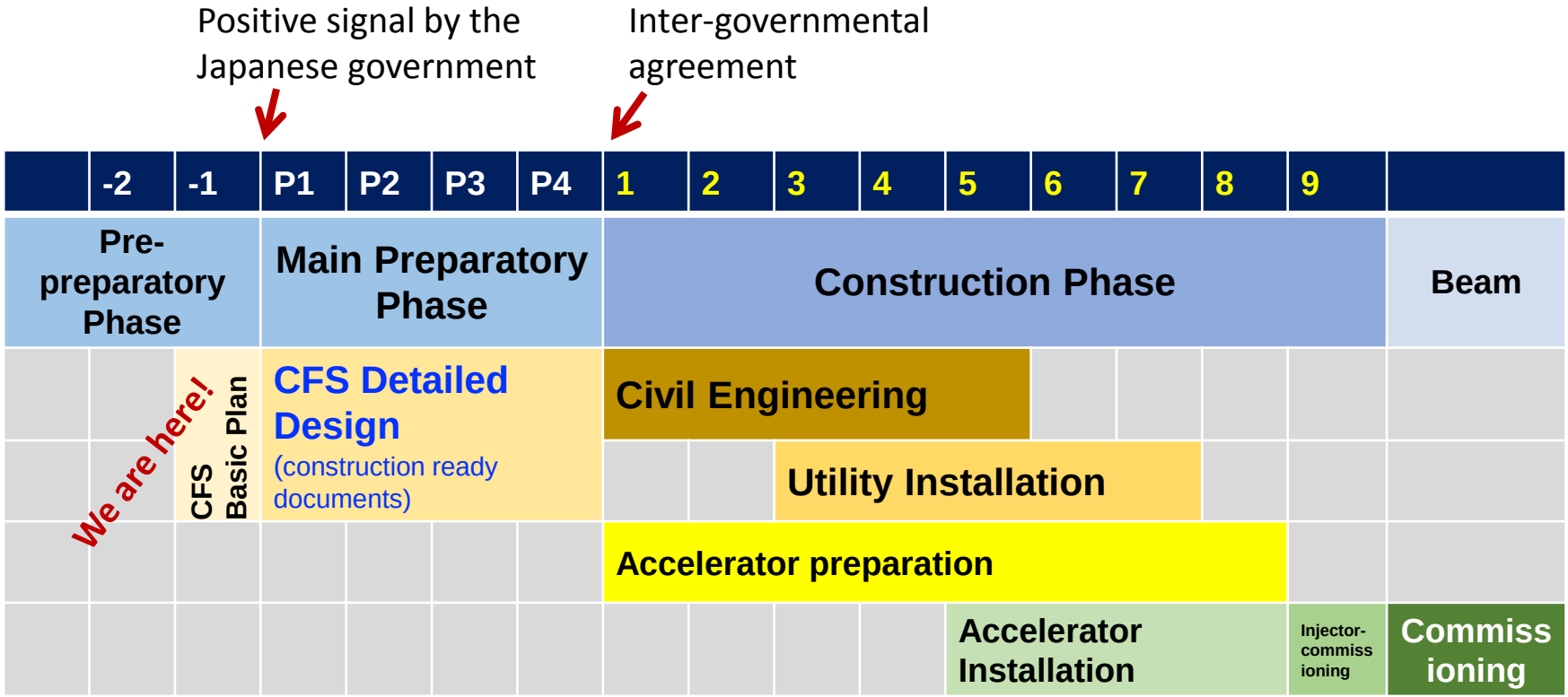

Alignment of ILC

- BDS: “laser straight” in vertical
- Main Linac: Cryomodule will be aligned against the geoid.

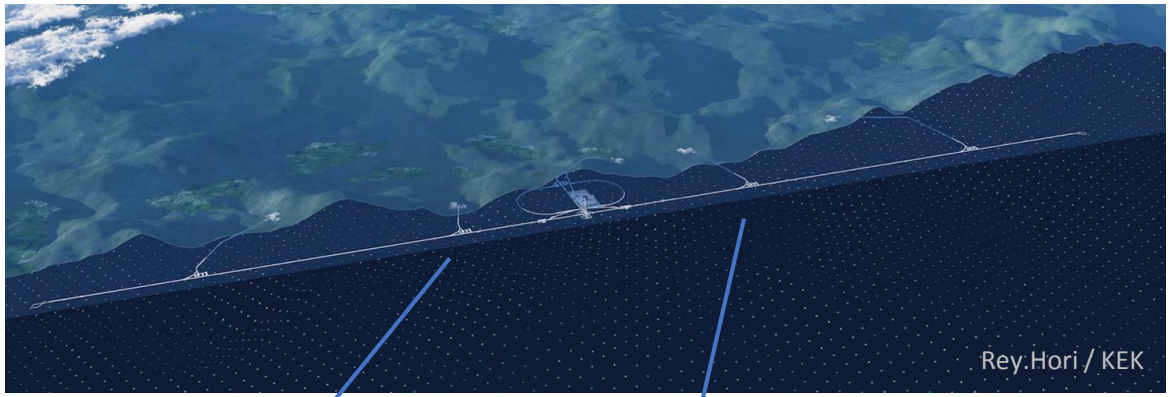

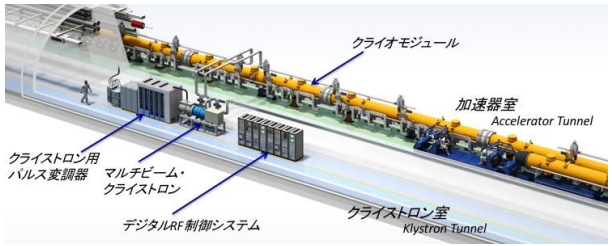

Lattice geometry is updating from TDR

- Follow the ML section to the geoid
- Include the vertical bend between the ML section and the central region (laser straight)
- Include tune-up dumps

Positron scheme

- TDR based draft geometry for undulator positron source is prepared.
- That for e-driven positron source should be done following the current discussions.
- Differences are localized and not a major difficulty on CFS design.

Main LINAC and RTML

Main Linac (ML) tunnel

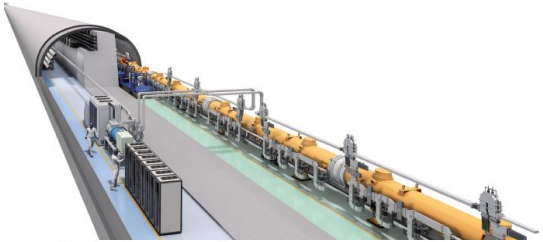

ML Tunnel Cross-section

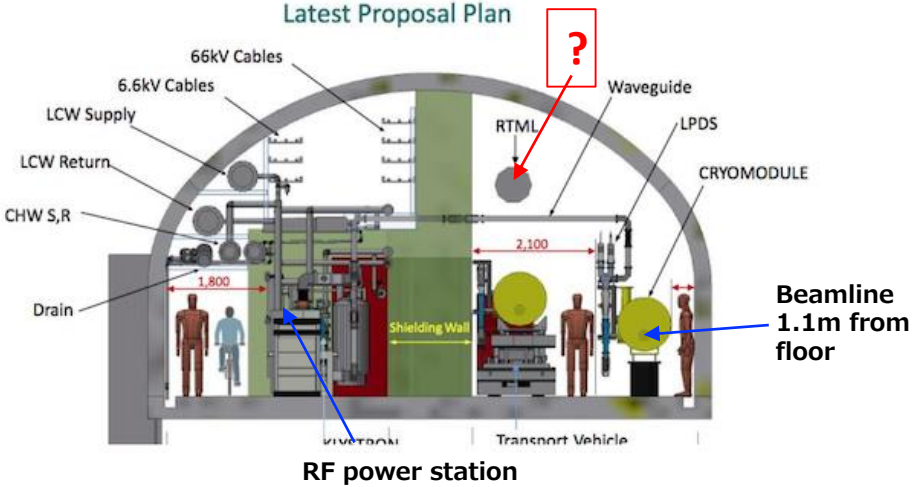

- ML section is about 70% of the ILC-250 (end to end).
- Follow the geoid
- Central radiation shield will be put after finishing the tunnel.

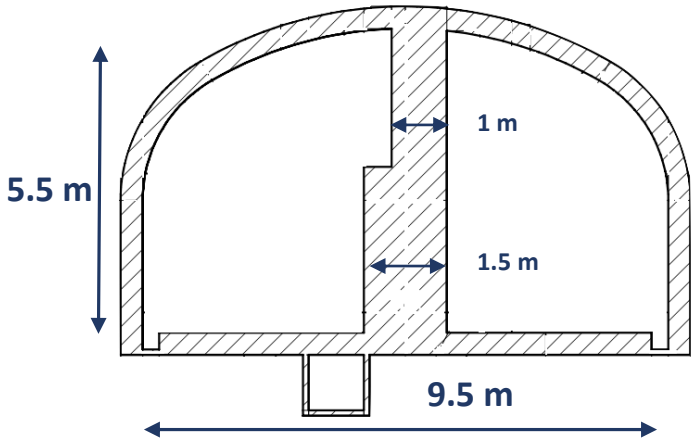

Where does RTML pass through the ML tunnel?

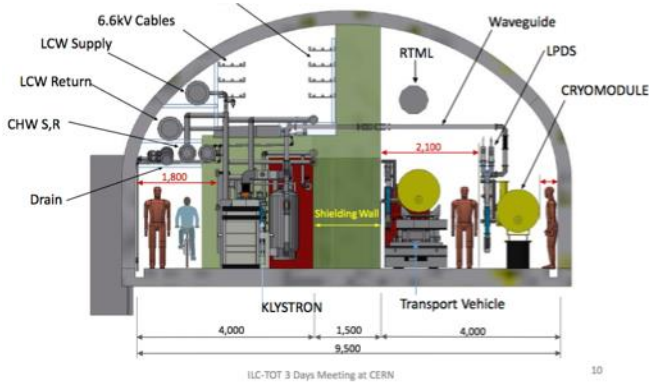

TDR Vol3, p167

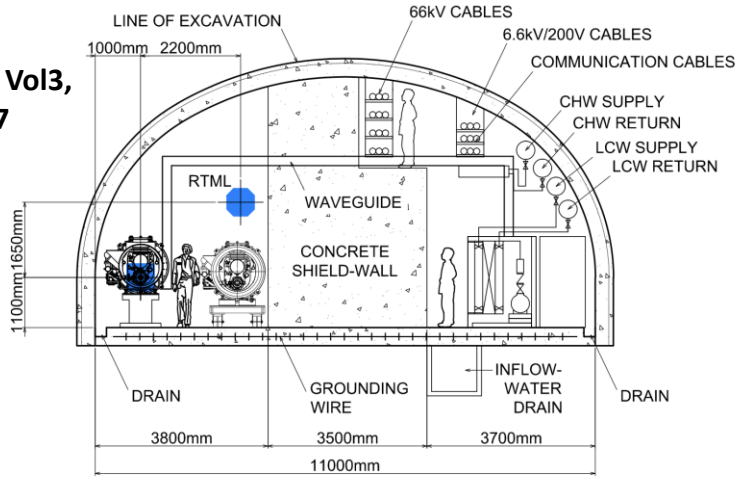

The upper left figure is often used after the change request of central wall reduction.

It was prepared only for discussion of equipment layout and its layout has not been determined.

- In particular, **RTML is above the waveguide and is higher than that of TDR.**

  It is misleading and brings many considerations on beam dynamics, installation and alignment.

- **RTML position in the current optics design has never changed from TDR.**
- **This figure should be modified.**

Handling of groundwater outside the tunnel

Inflow water assumption
・**1.0 tons/min/km (max)**
・5.0 tons/min/Access Point (max)

About 30,000 tons/day

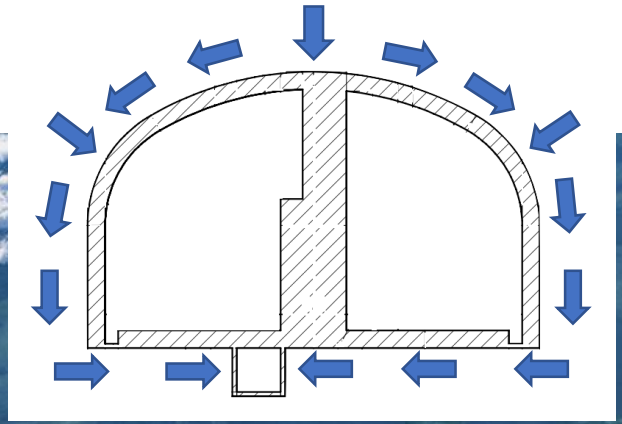

Pump-up to the surface;
Supplemental water for cooling tower

To access hall

Draw water into the access hall tank
- Natural flow scheme
- Pump relay scheme

Rey.Hori / KEK

Turn-around

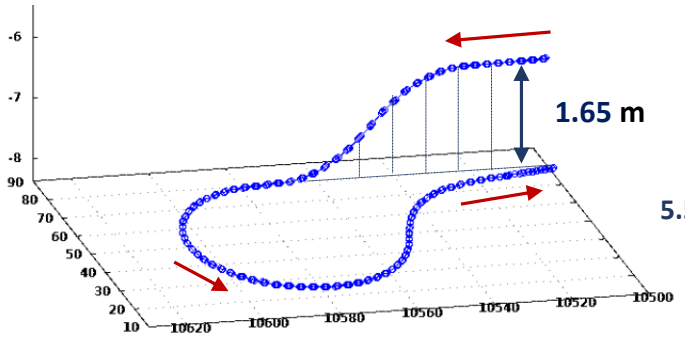

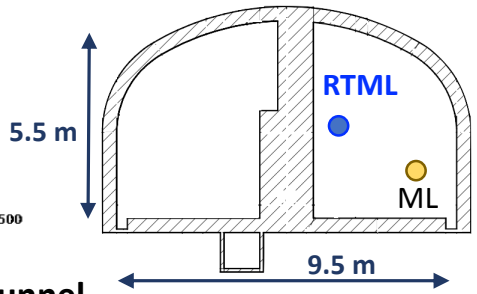

ML tunnel Will be extended beyond the turn-around;

- Make a future extension of ML easily.
- Enhance the safe evacuation of turn-around.

ML tunnel

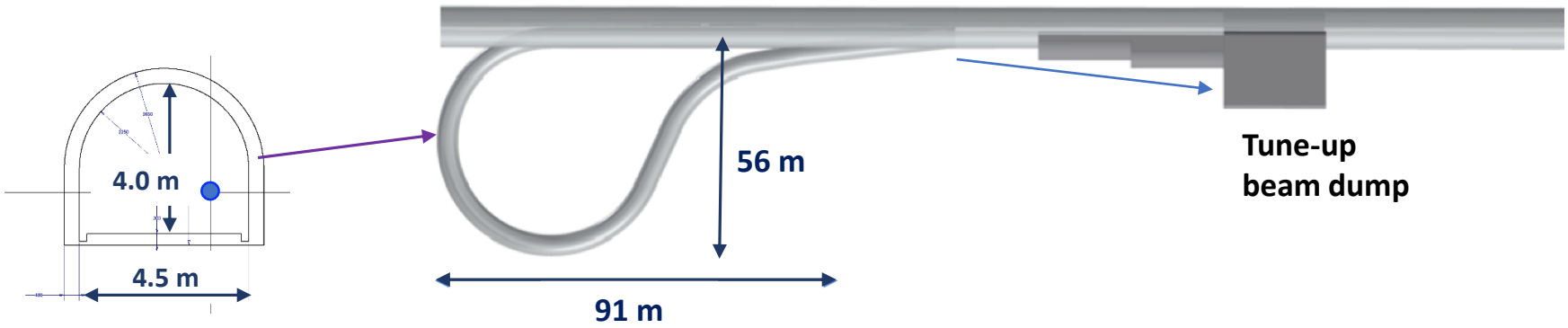

Central Region

Layout of Central Region

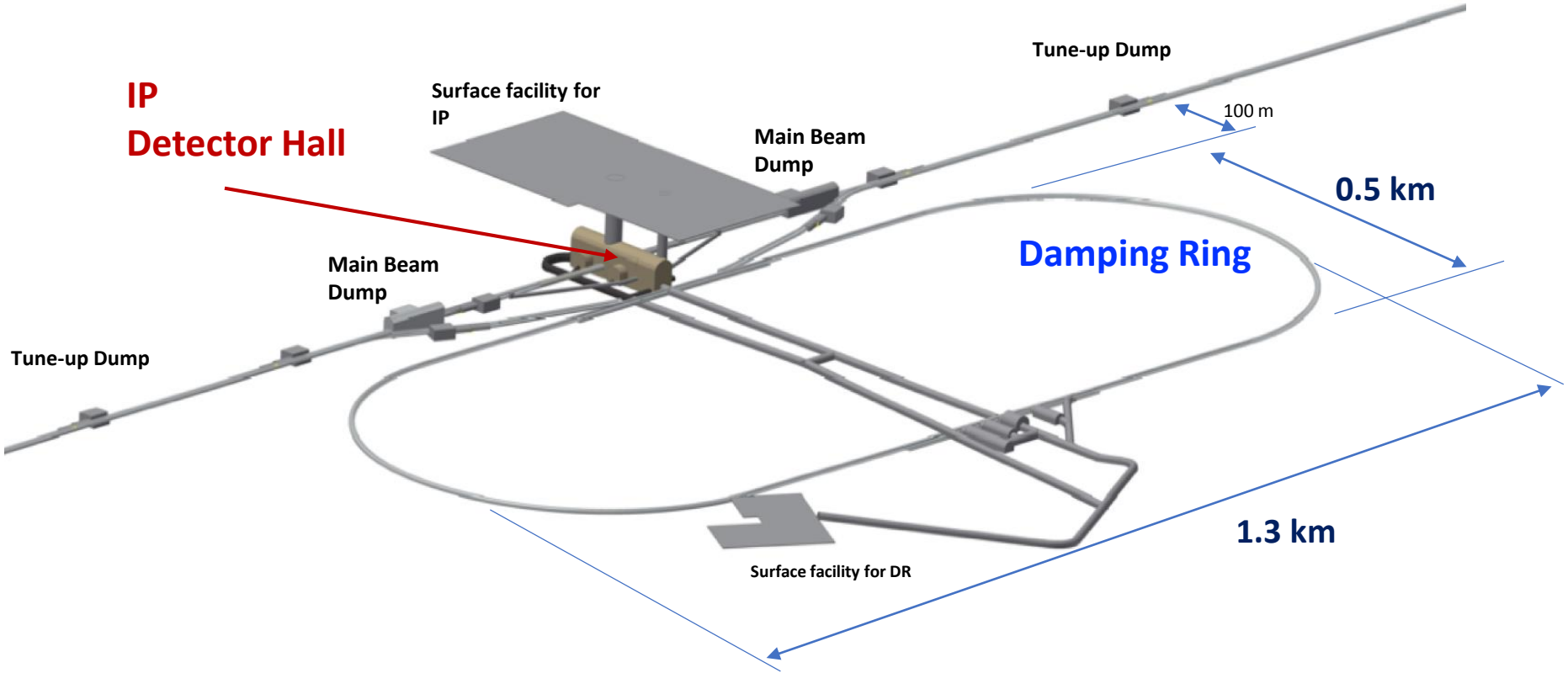

Damping Ring

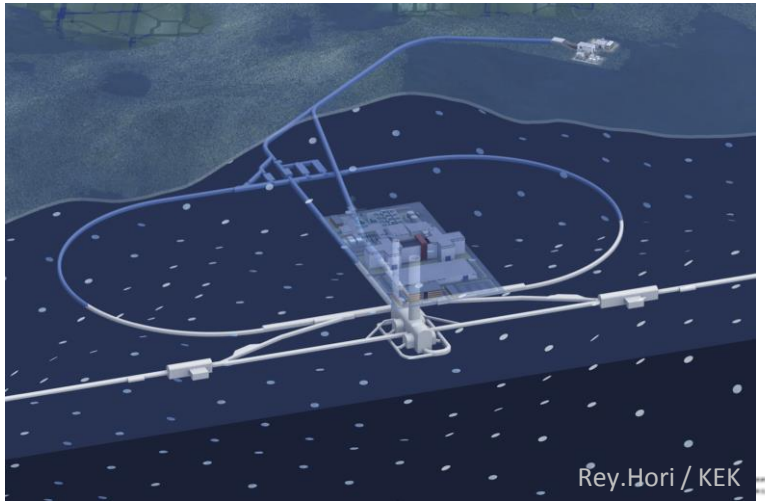

- Circumference: 3.2km
- **Start with two rings**
- **The arc section of the ring is a single tunnel without a central shield.**
- **Straight section is Kamaboko with a 3.5m central shield.** (TDR)

Arc Section

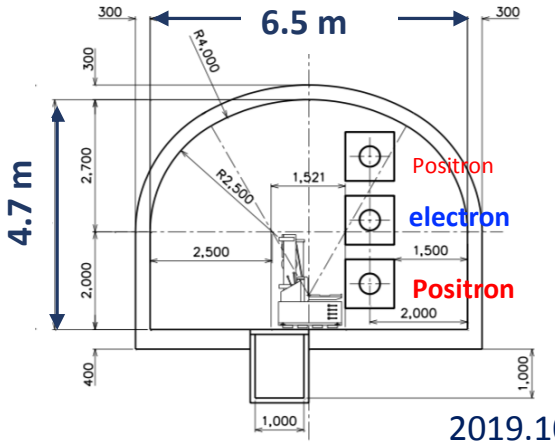

Straight Section

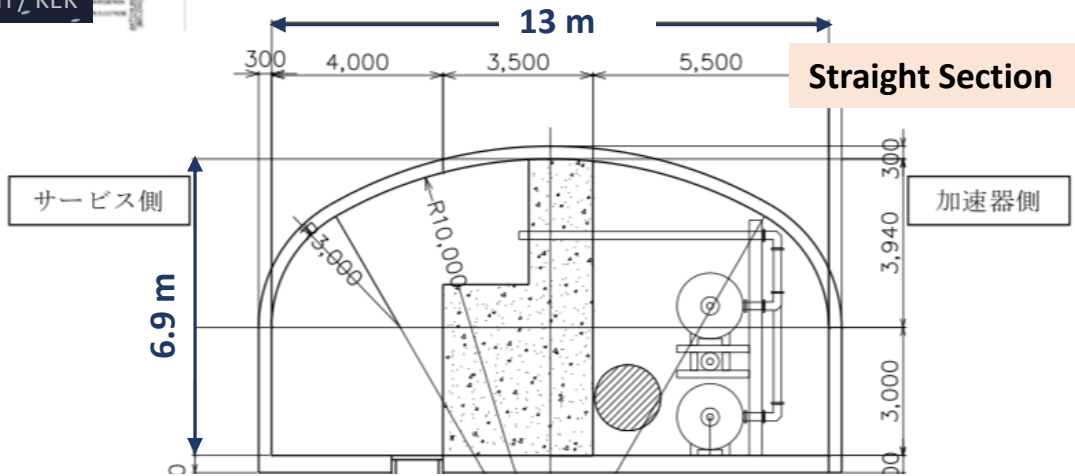

LTR/RTL

Between DR and BDS tunnel

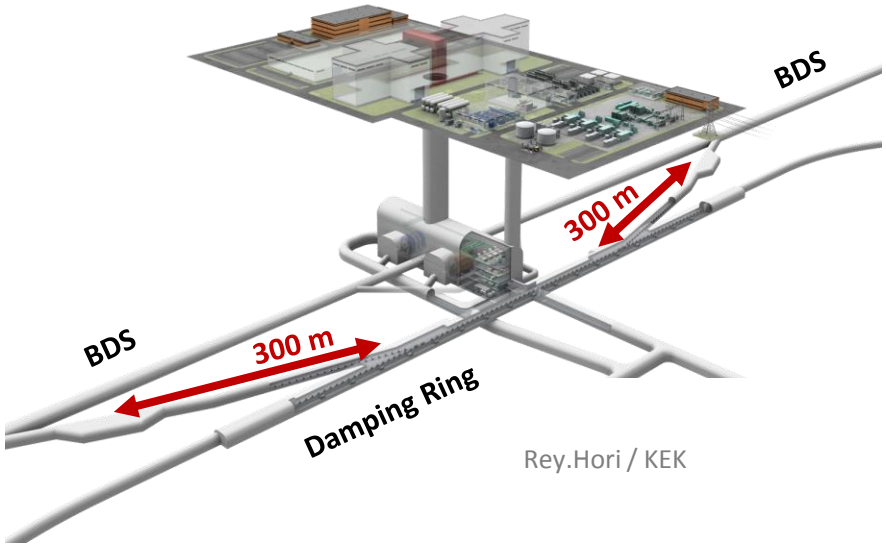

Rey.Hori / KEK

Beamlines

- Injection to DR
- Extraction from DR with tune-up dump
- Spin rotator

TDR design:

Kamaboko with 3.5m central shield

Do we need it?

Check the requirements and optimize the design

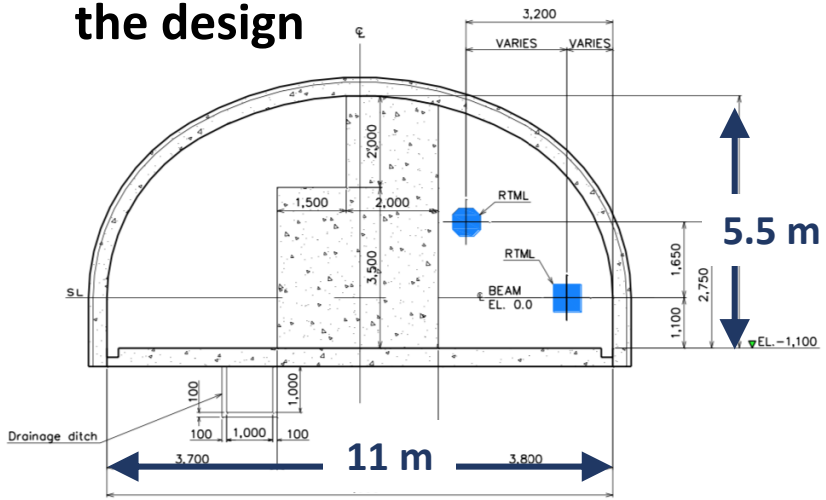

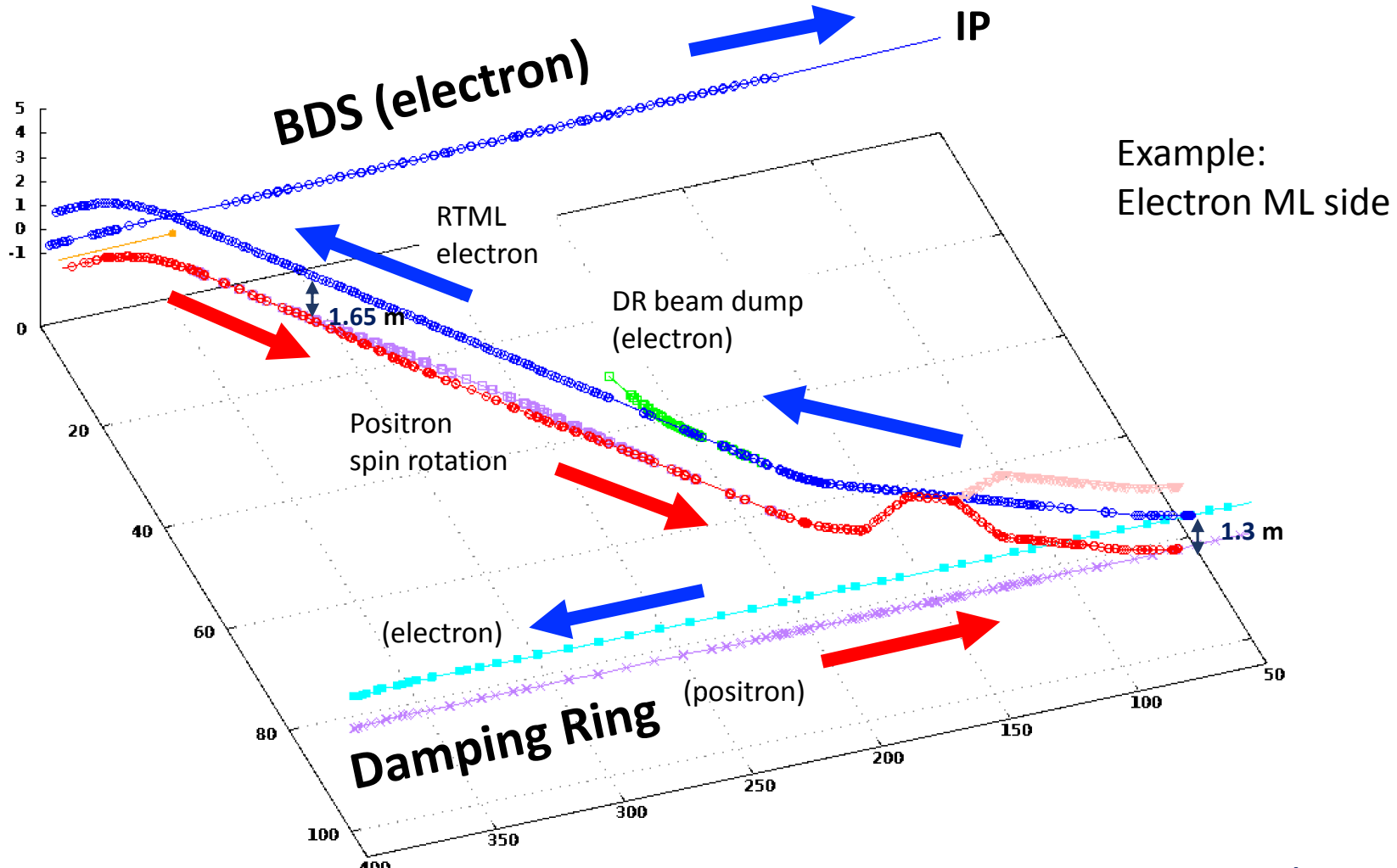

Example:
Electron ML side

BDS tunnel (PM-8 to PM+8)

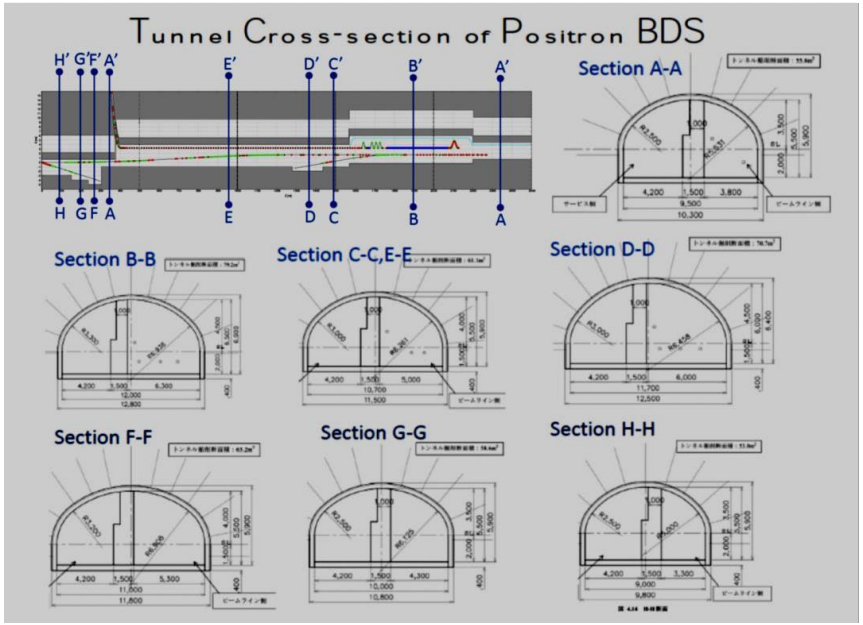

CR-015: Fig.5 tunnel cross-section model for cost estimation

ChangeRequest-015: Single tunnel for e+ BDS (TDR was two tunnel scheme.)

From the construction point of view, it is desirable to **simplify the design**.

- Discussion has been started by the CFS group in Japan.

Example: electron BDS; downstream of undulator

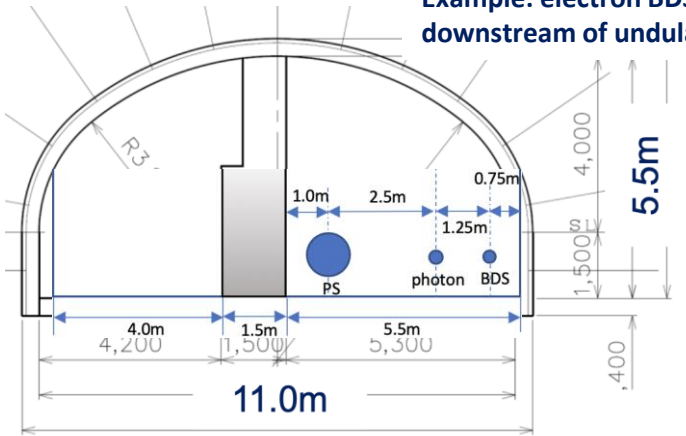

- The **11m-wide kamaboko tunnel along the BDS beamline** is a candidate.

Positron Source

- **Scheme selection will be done by the end of the first year of preparation phase.**
- Prepare the CFS design for all possible schemes.

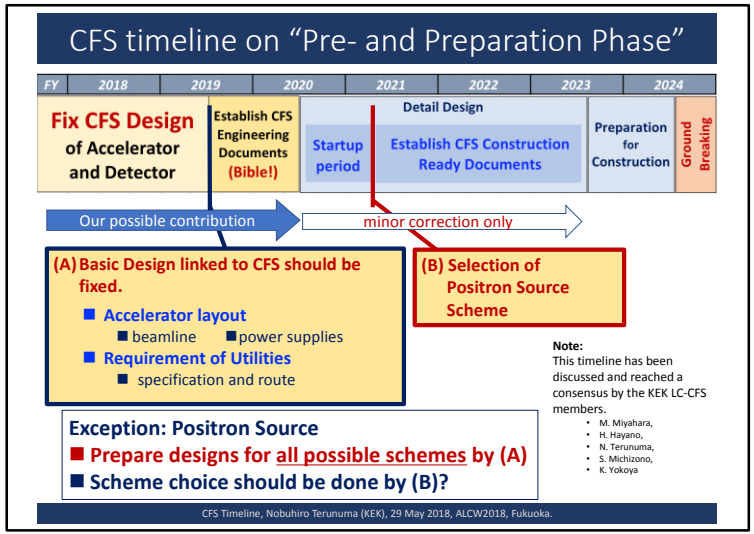

- **For undulator scheme, draft CFS design exists as that for BDS.**
- **For e-driven schemes, CFS design will be conducted by following the current discussions**, for example, the separate dedicated tunnel for flexible construction/commissioning strategy **.**

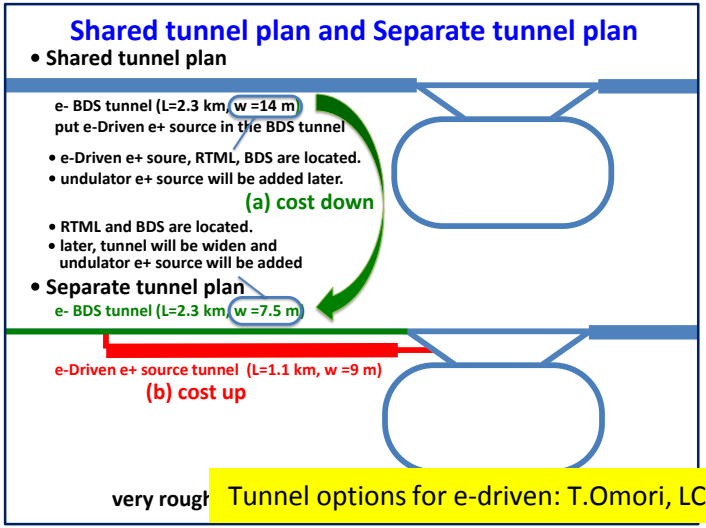

Tunnel options for e-driven: T.Omori, LCWS2018

Detector Hall

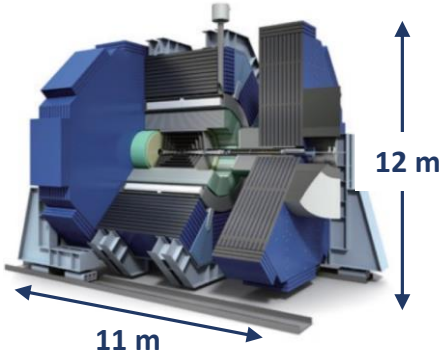

SiD検出器, 重量 8,000t

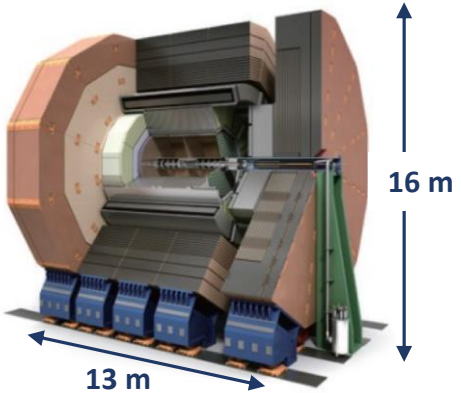

ILD検出器, 重量 15,000t

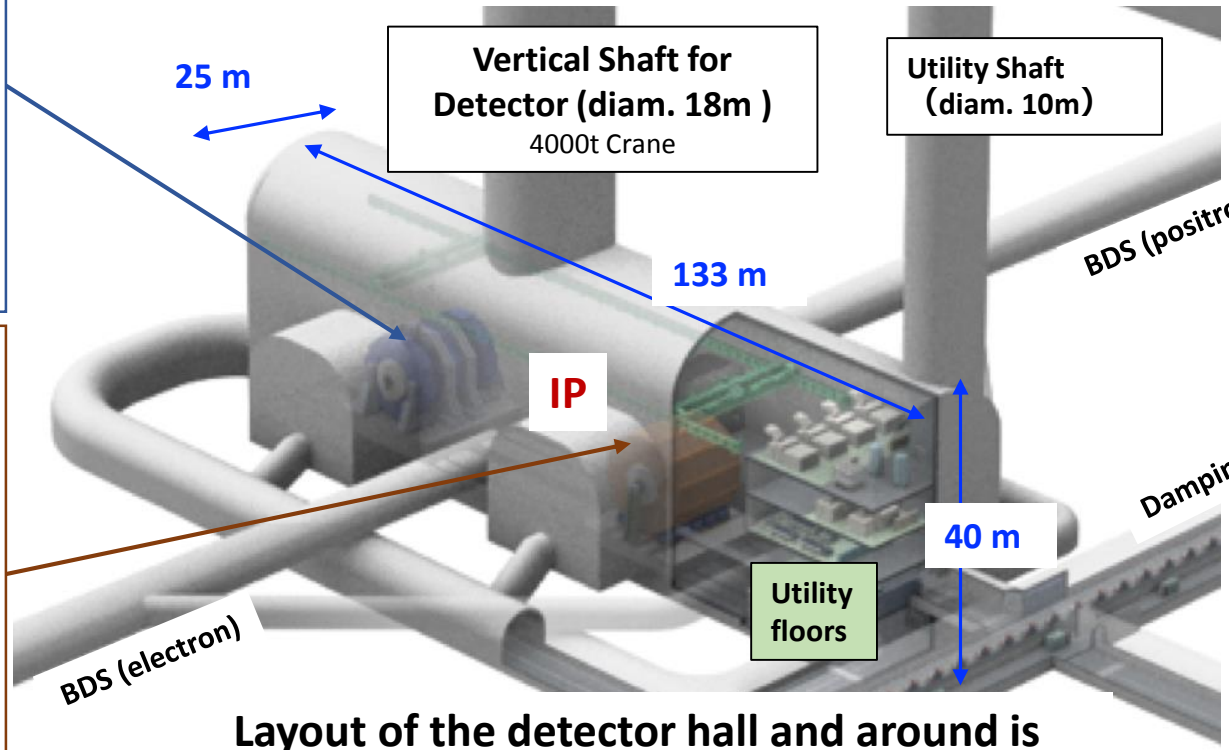

Layout of the detector hall and around is under discussion with MDI

Rey.Hori / KEK

Plan view of the Detector Hall

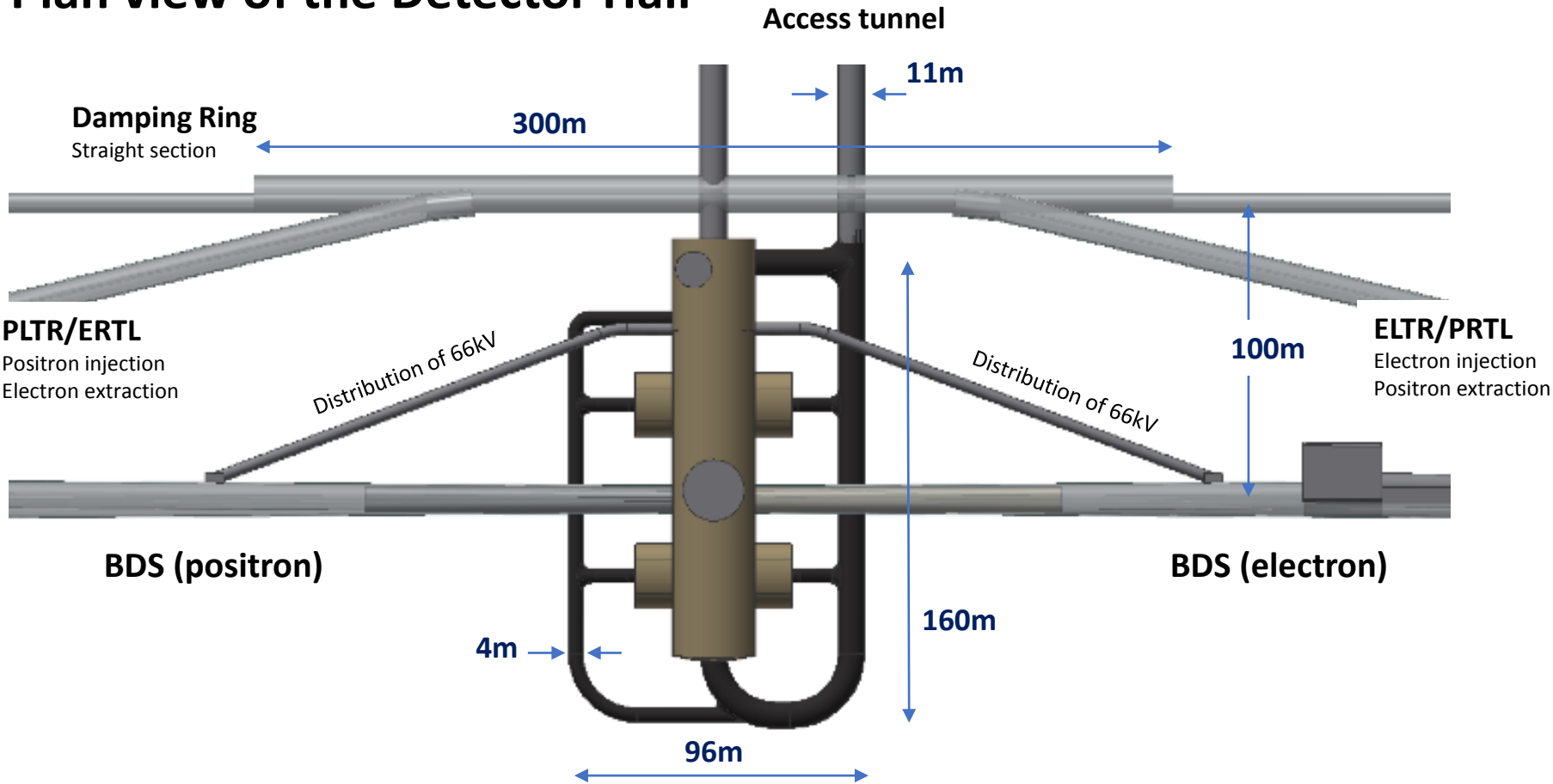

Main beam dump

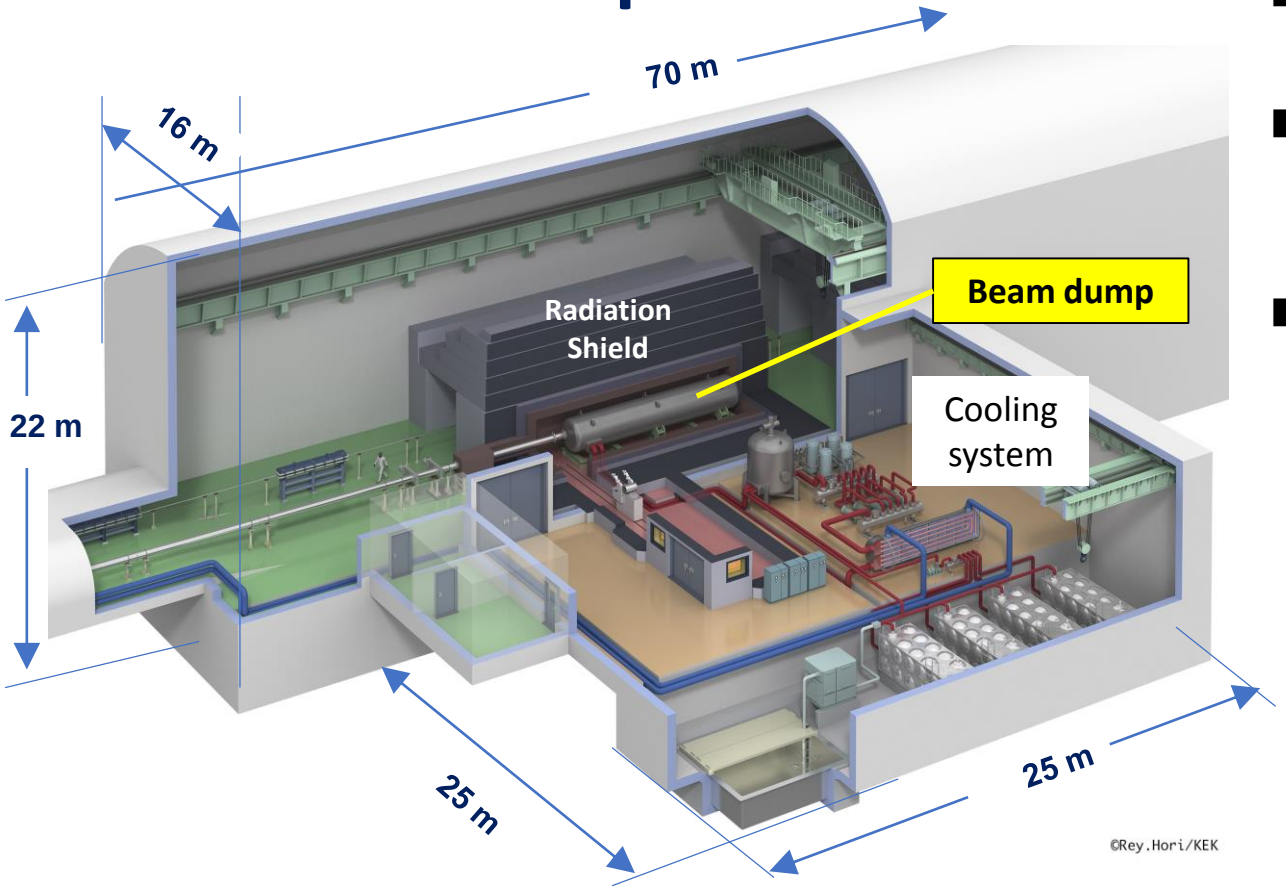

- Big cavern to install the 5m-thick shields.
- Water dump capable for 18MW beam power (1TeV).
- Enable the future de-commissioning

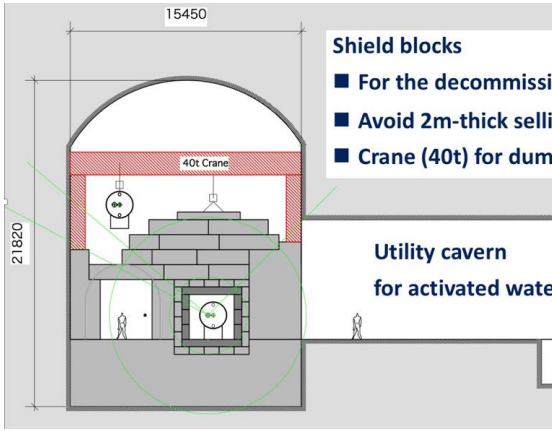

Tune-up beam dumps

- 60kW (9 points) and 400kW (2 points)

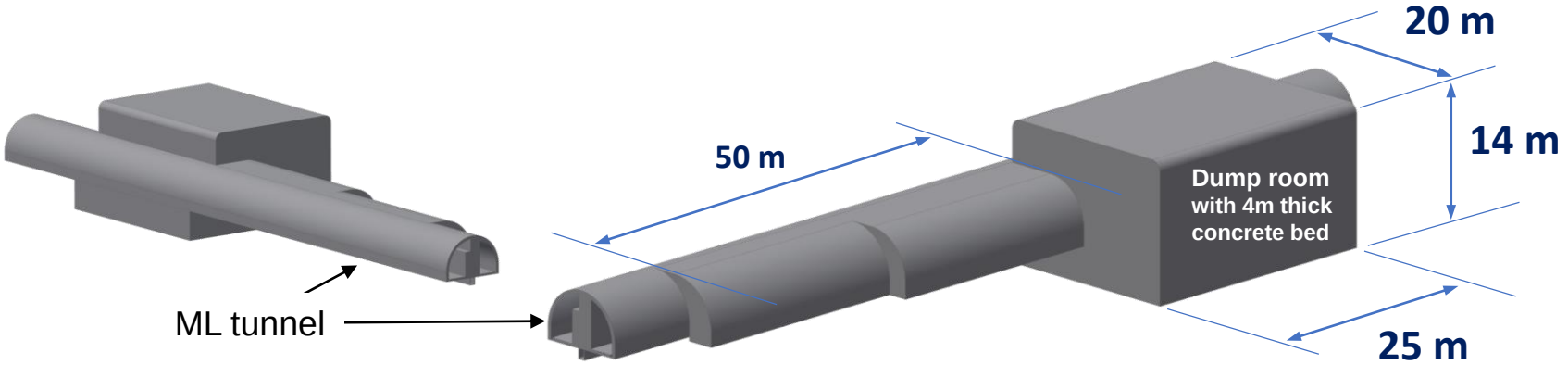

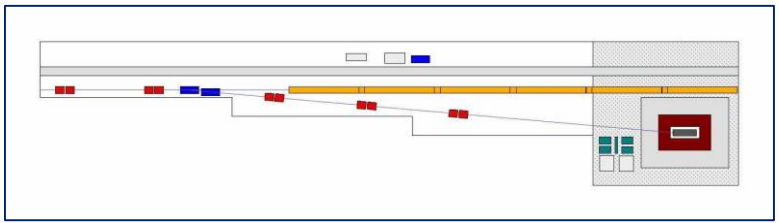

Tunnel cross section
will be simplified.

Access tunnel and access hall

Surface Access Stations

Site-specific design of Surface Access stations. arrangement can be optimized and re-arranged site-by-site.

Option C

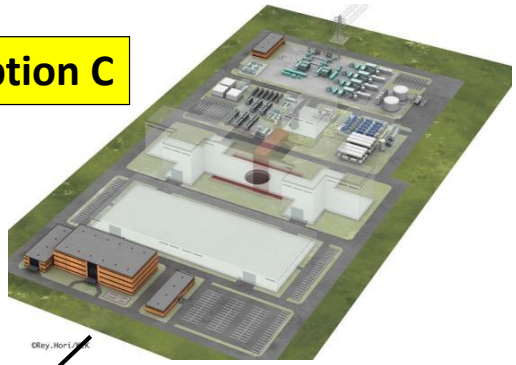

surface design
IP area 78,500m² area
to be further discussed
specially with LCC-MDI.

surface design
access stations
16,600m² 5 area
to be further discussed.

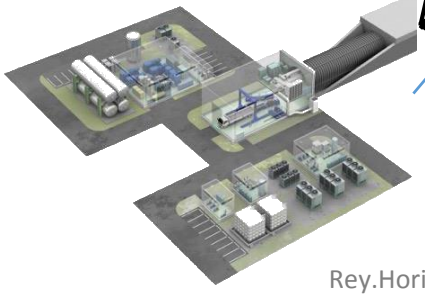

Rey.Hori / KEK

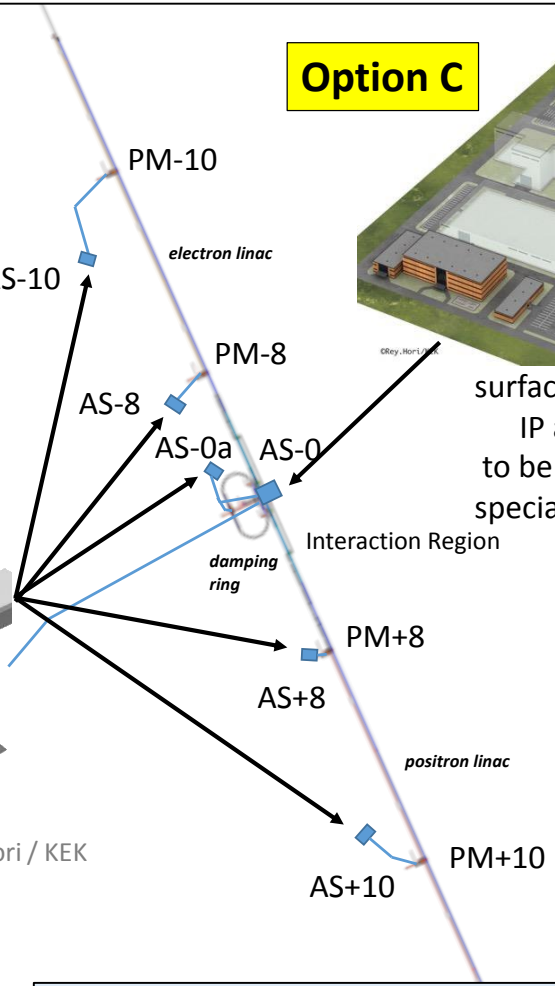

Area of surface building (Tohoku Study)

AS+10: 4778m²
AS-10: 4778m²
AS+08: 3706m²
AS-08: 3404m²
AS-0: 21185m²
AS-0a: 668m²

H. Hayano, LCWS2017, Strasburg

surface design
IP area 78,500m² □
to be further discussed specially with LCC-MDI.

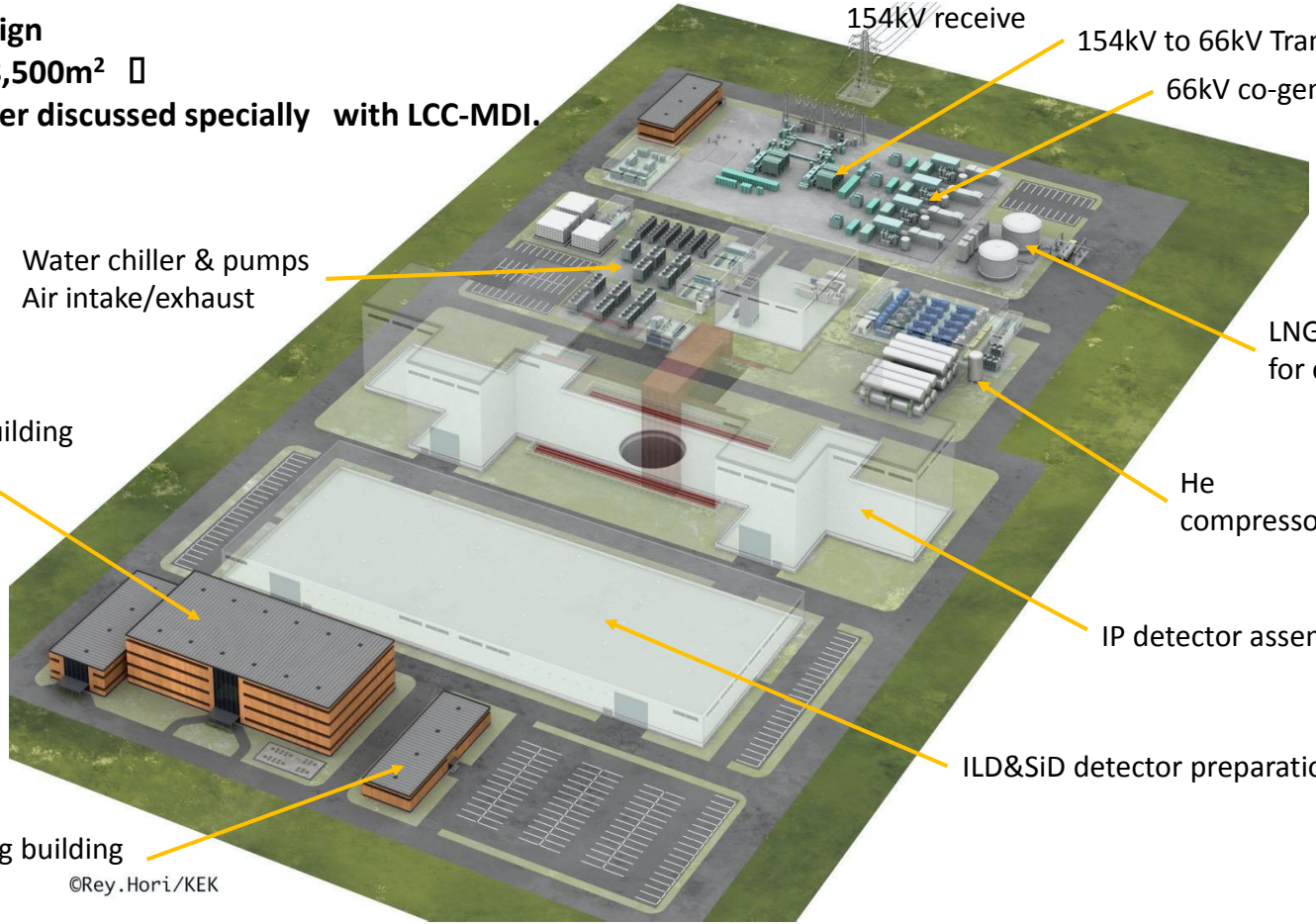

9

H. Hayano, LCWS2017, Strasburg

surface design
access stations
16,600m² 5 area
to be further discussed.

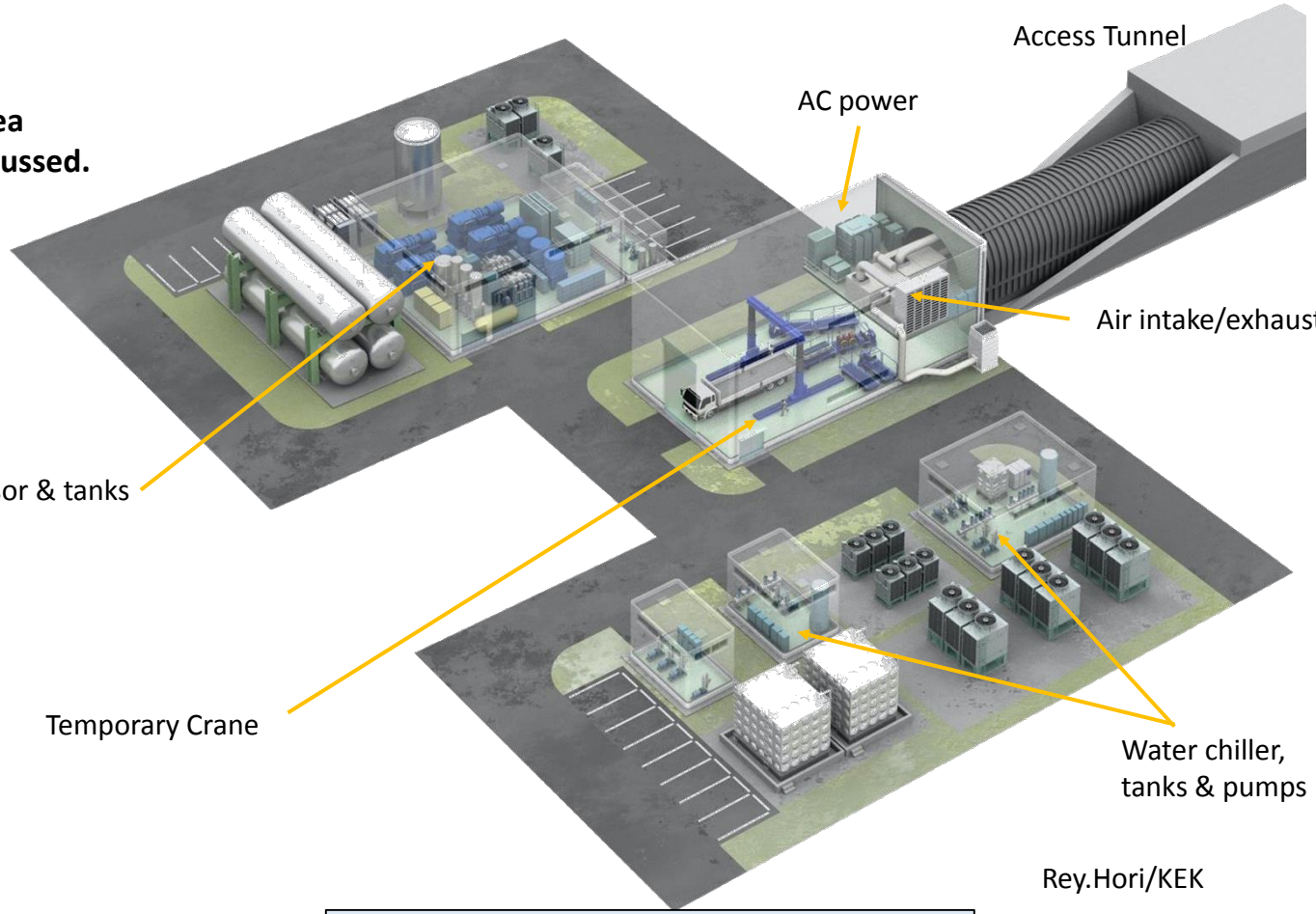

H. Hayano, LCWS2017, Strasburg

TDR

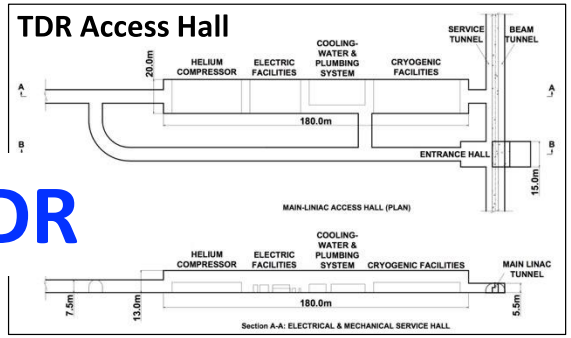

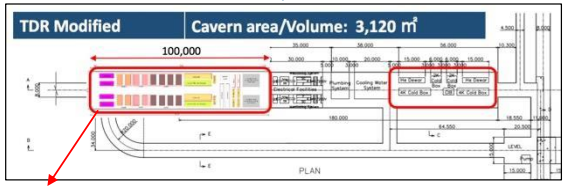

go to surface

After cryogenics change request

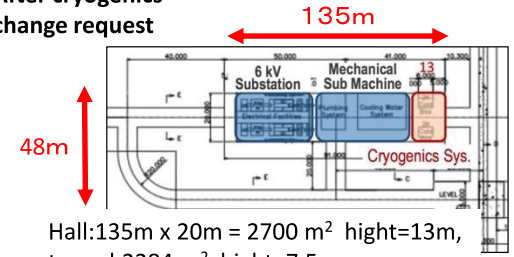

Hall:135m x 20m = 2700 m^2 hight=13m,
tunnel:2284 m^2 hight=7.5m
total area=4984 m^2 , volume=52230m^3

Proposal of New Access Hall shape for Main Linac

direct access of Electric, Water/Air, Helium to Main Linac Tunnel.
separate halls for electric, water, helium.
Keep enough connection room for cables, pipes, ducts, and helium trasfer lines.

Proposed Access Hall
to accommodate detail designed utilities

Hall:2858 m^2 tunnel: 904 m^2
total area=3762 m^2 total volume=38426m^3

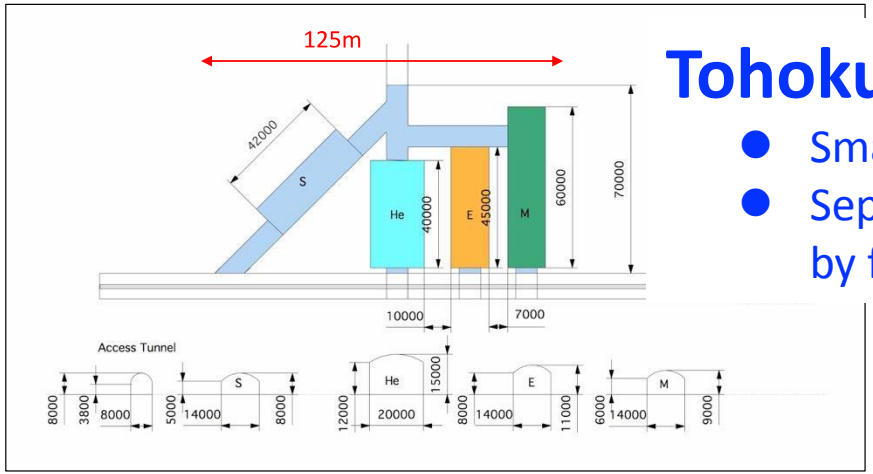

Tohoku study

- Smaller volume
- Separate cavern by function

27

H. Hayano, LCWS2017, Strasburg

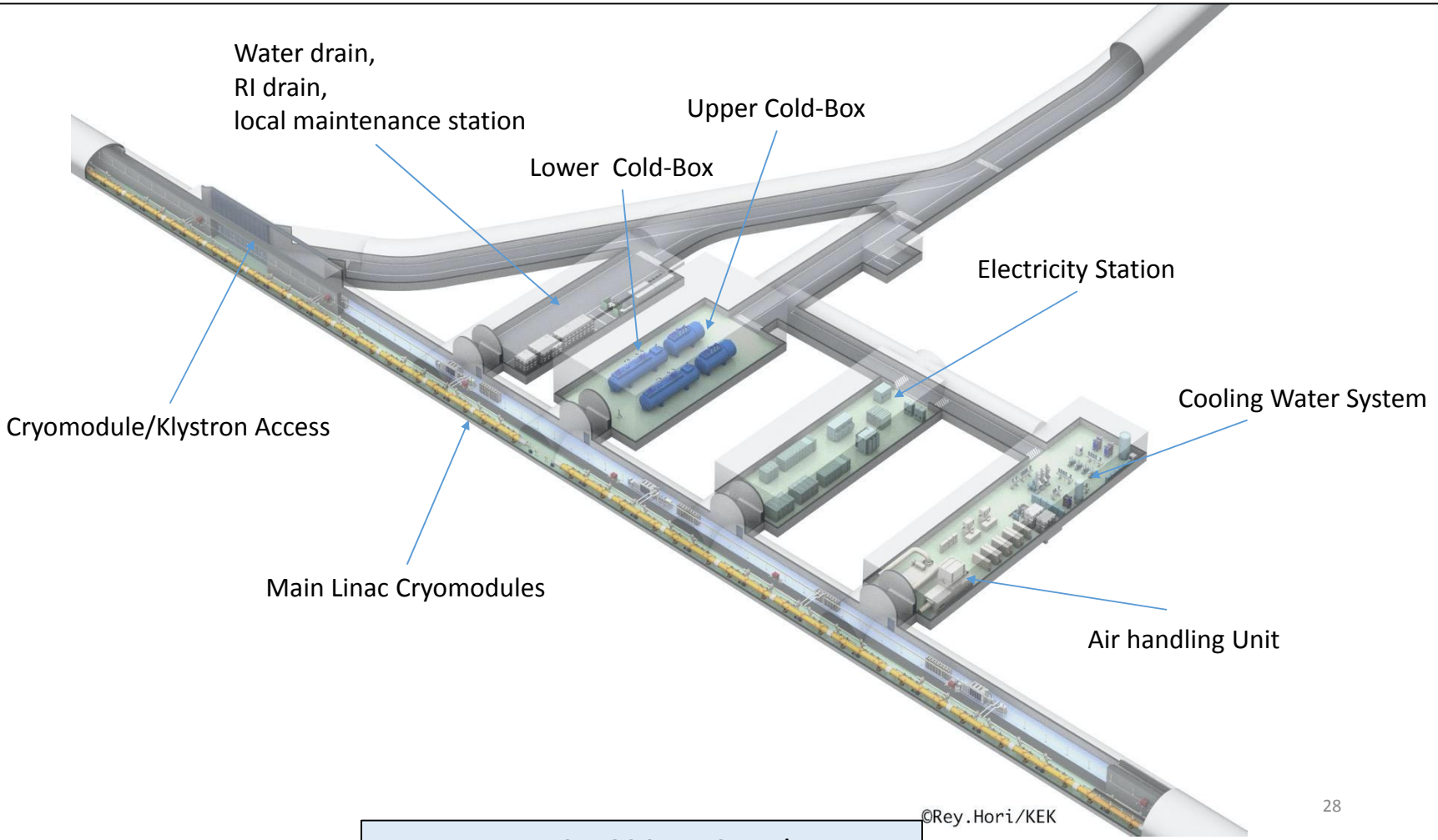

H. Hayano, LCWS2017, Strasburg

Summary

- **Comprehensive civil engineering integration** is underway by the CFS team from KEK and Tohoku ILC planning office. The draft will be discussed with the international ILC-CFS working group.
- Some designs require updates from the TDR.
- In early next year, we hope to have draft drawings that will allow a company to start the basic design.