# Extending the Sensitivity Range by Charge Sharing - Proof of Principle with an APV FE system

Hans Henschel, DESY Zeuthen

# SRS - APV F/E System

## Components

FE Board
- XILINX Virtex FPGA
- Fibre or Ethernet cable to PC
- Power Connector
- Clock & Trigger (NIM)

ADC Board
- 16x 12-bit ADCs, 40MHz
- 8 HDMI connectors to frontend

APV25 Board
- 128 channels
- PreAmp
- 50ns Shaper
- Analog pipeline
  - 192 slots = 4.8$\mu$s
- R/O by HDMI cable
- up to 2 APV per cable

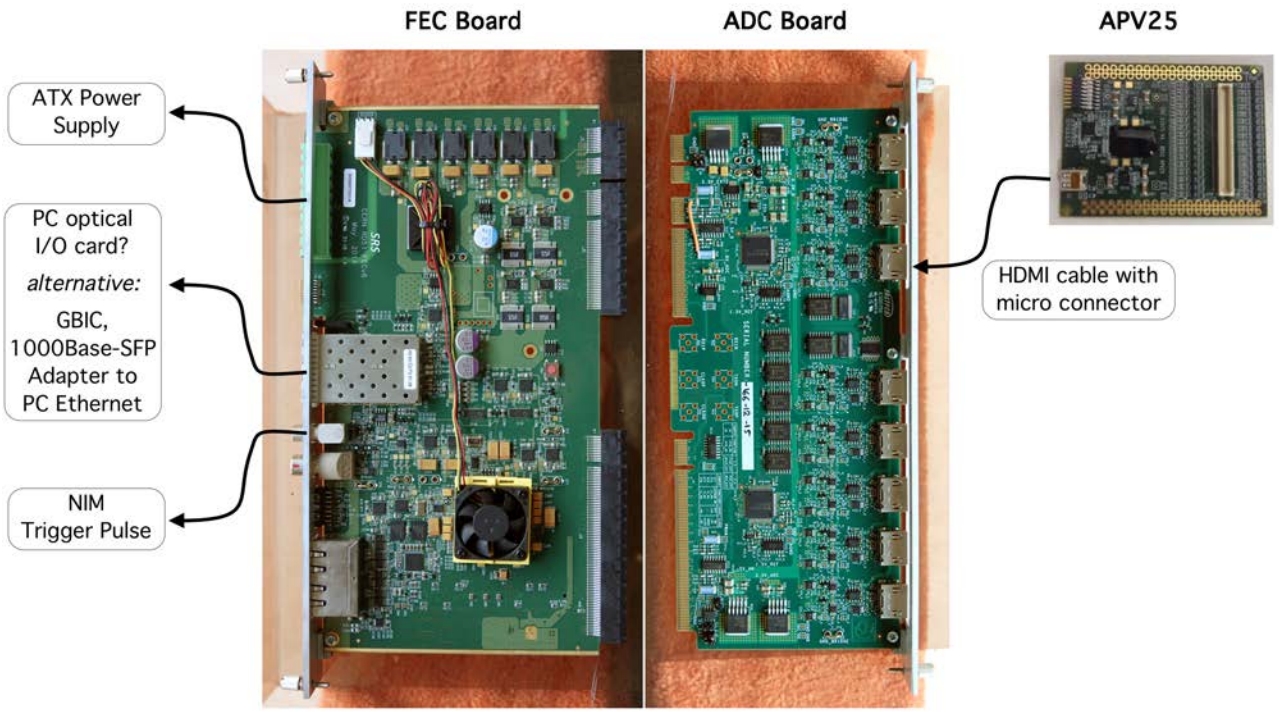

# SRS - APV F/E System

## Setup Zeuthen

FEC + ADC Boards
Readout PC
ATX Power Supply
+ DIY Voltage Converter 2.0V

*MANY THANKS TO YAN & MENY*
*for sending the modules to Zeuthen!*

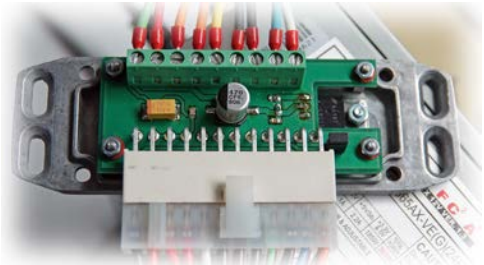

Device Under Test (APV25)
with charge injection circuit
NIM Pulser
for Trigger
TTL Pulser (synchronized)
with Attenuator & Delay
for charge injection

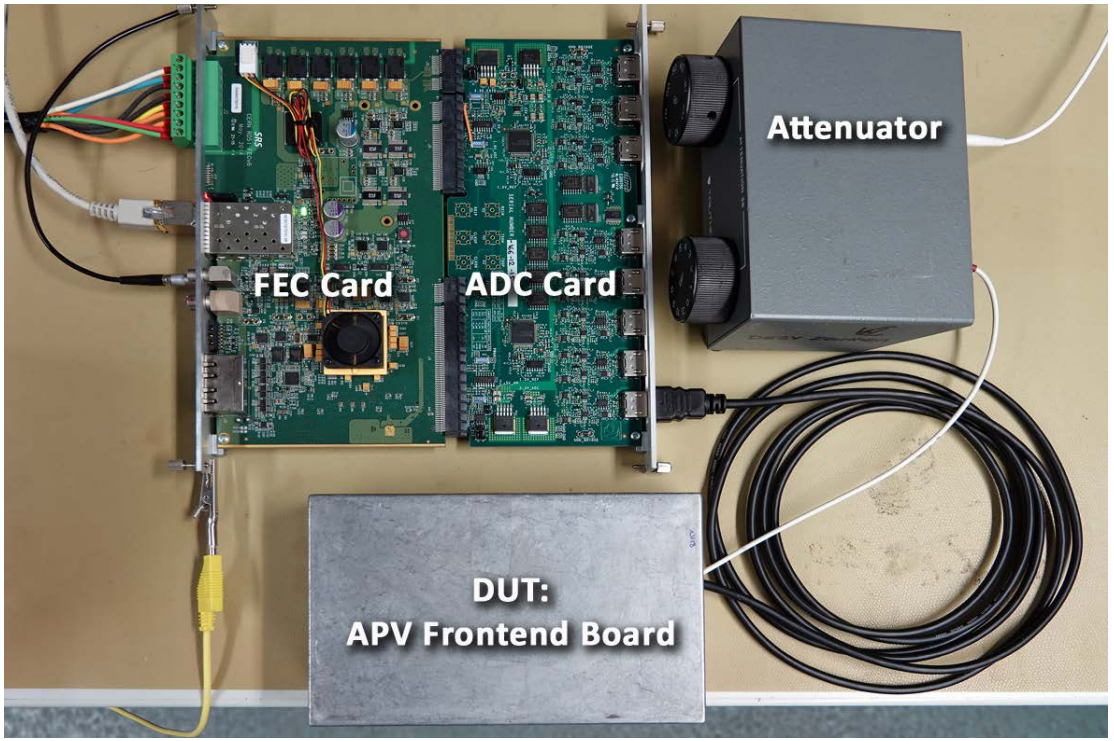

## Charge Sharing Proposal

Basic Idea (Sasha, Yan): Share charge between neighboring channels by insertion of two coupling capacitors of different value

Refined Idea (Wolfgang): Use existing coupling capacitors of the APV board (and change their value) → no adapter board needed!

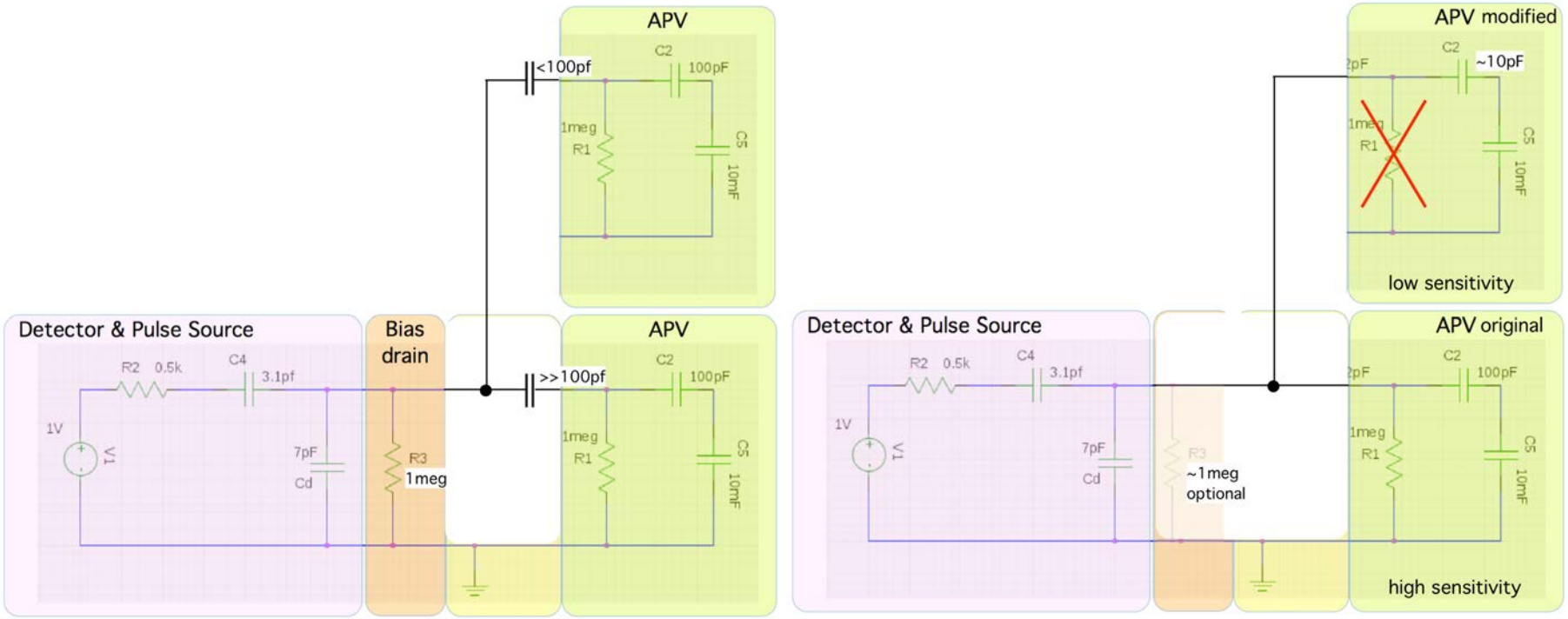

## APV Board Modifications (1)

exchange coupling capacitors in 4 groups of channels (8-16-24-32 & 105-106-107-108)

standard: 4x100pF

new: 100pF - 22pF - 10pF - 4.7pF *remark: channel 24 (10pF) †*

inject input charge (1V step function) attenuated from -44dB to -26dB (3 … 35mV)

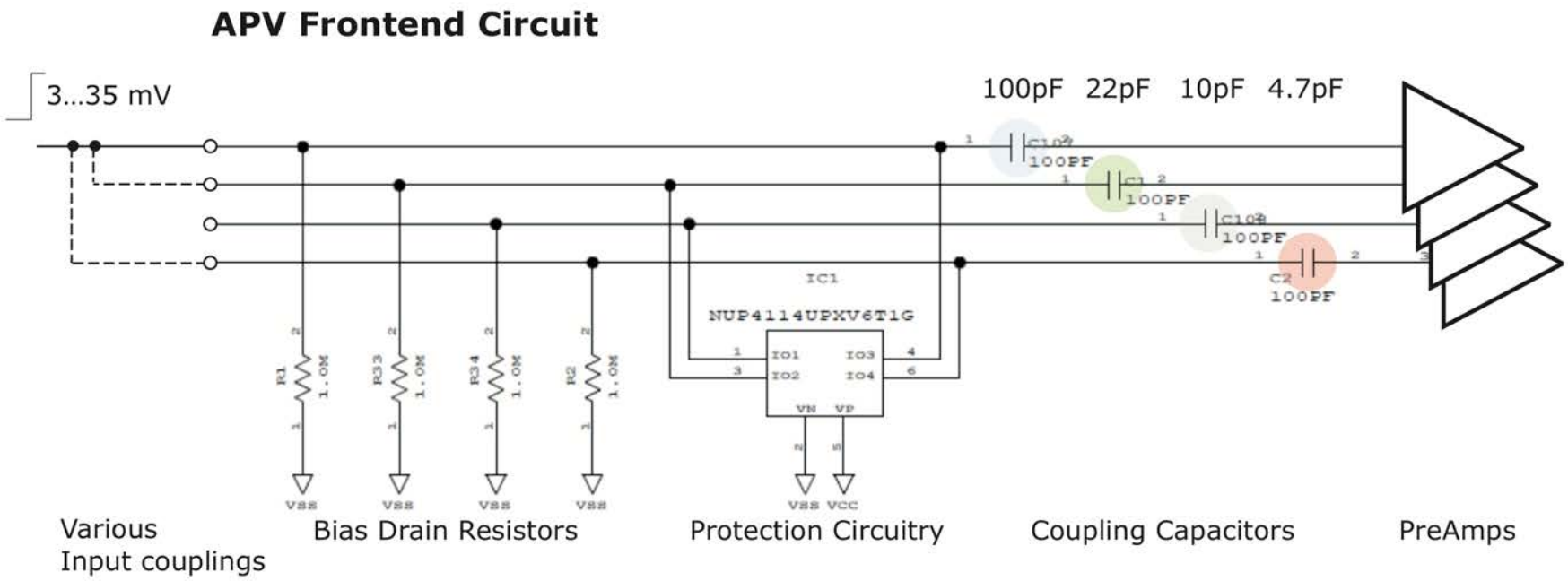

## APV Board Modifications (2)

electronic circuit data not available!

➞ reverse engineering of the pcb layout

exchange 6 SMD capacitors

solder 8 injection wires

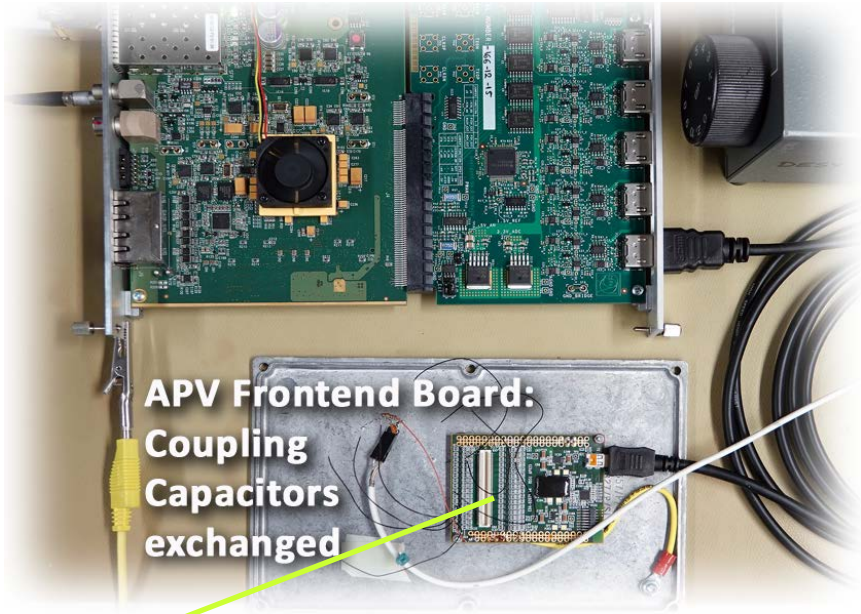


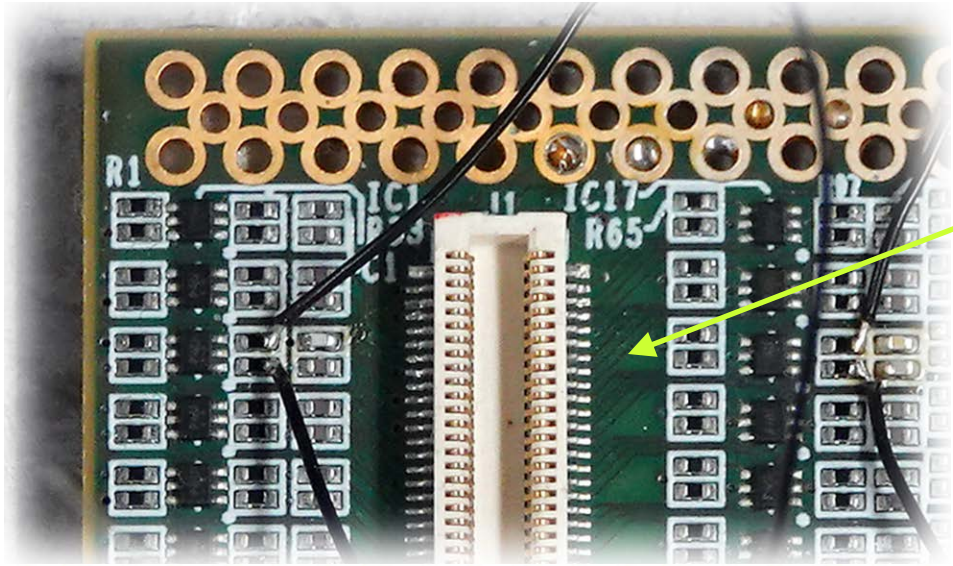


*MY THANKS TO WOLFGANG*
*for discussions and suggestions!*

# Data Taking

## DAQ System

use Testbeam 2015 DAQ system

***MANY THANKS TO SASHA***
***for helping us to bring the system up and running!***

write nTuples Root files
confine the analysis to modified channels

***A LOT OF THANKS TO INGO BLOCH (ATLAS group Zeuthen)***
***for writing a quick-and-dirty Root procedure!***

compare the mean values

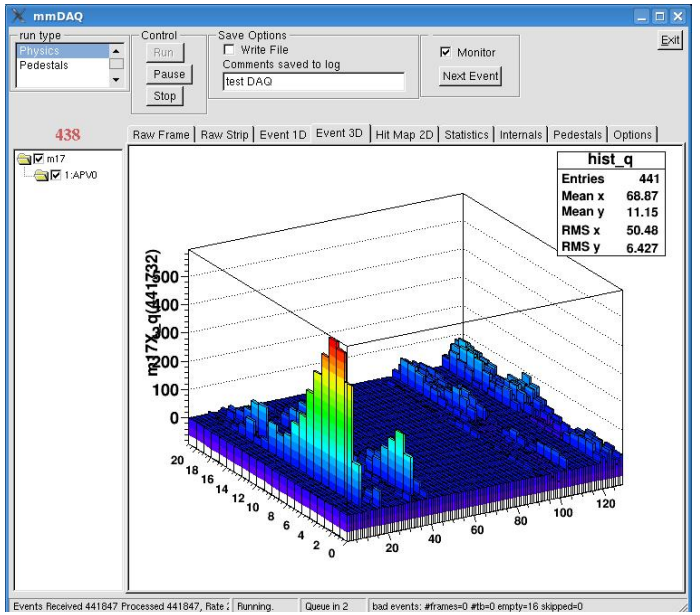


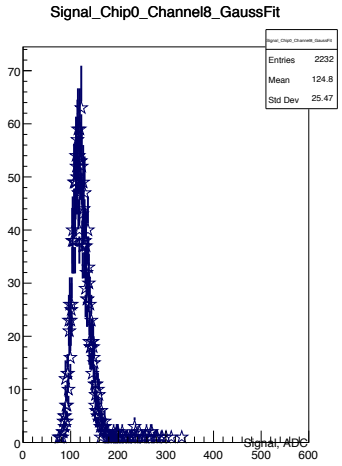


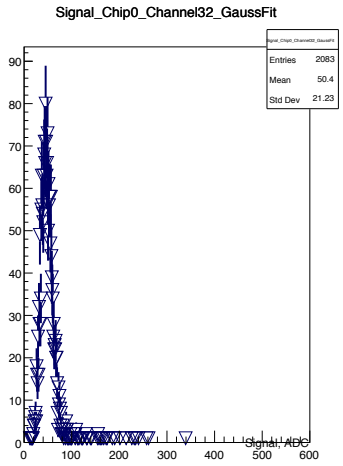

# Results

## Charge Sharing vs. Input Amplitude

sharing between different coupling capacitors is quite linear over a wide range of input charge

100% ≙ -32dB

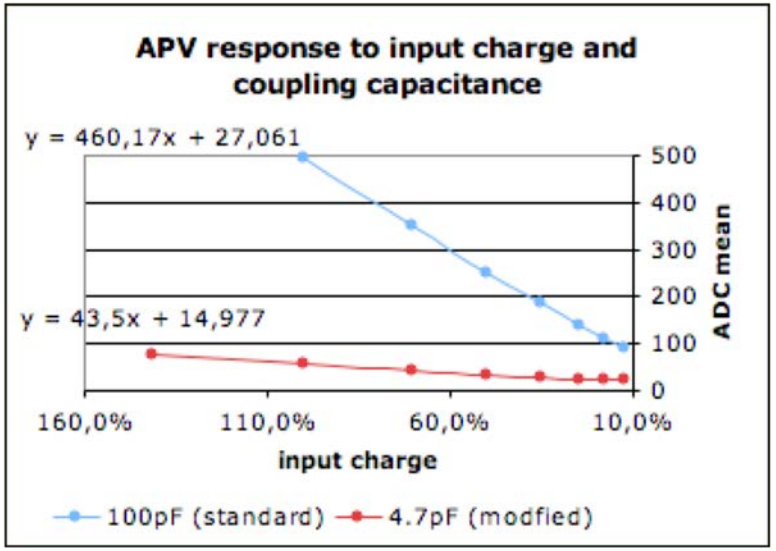


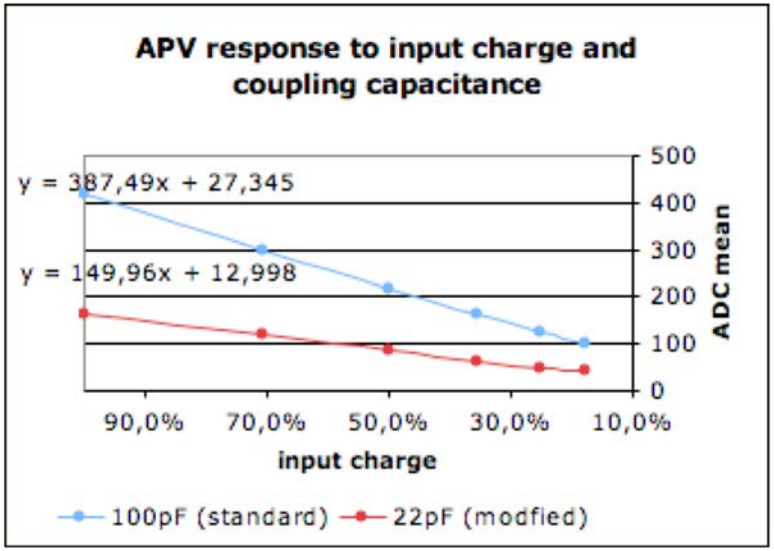


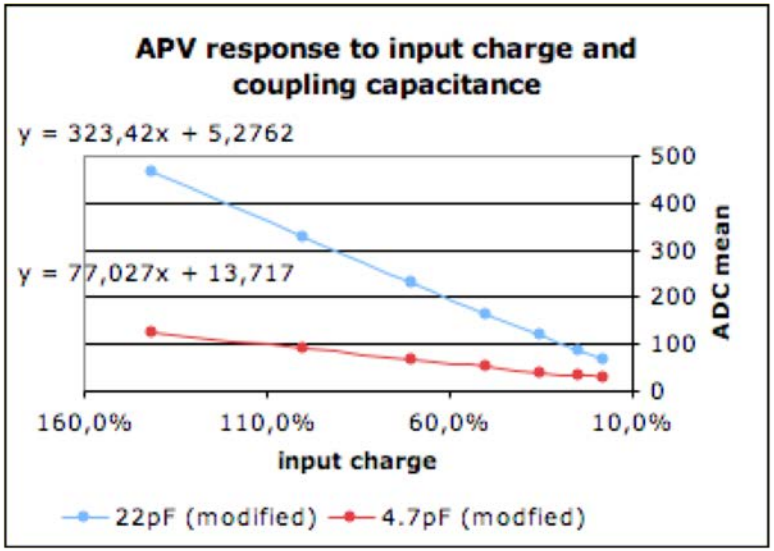

# Charge Sharing vs. Coupling Capacitor (1)

shared charge$_1$/input charge = C1/(C1+C2)

taking into account parasitic capacitance:

shared charge$_1$/input charge = C1/(C1+C2+Cp)

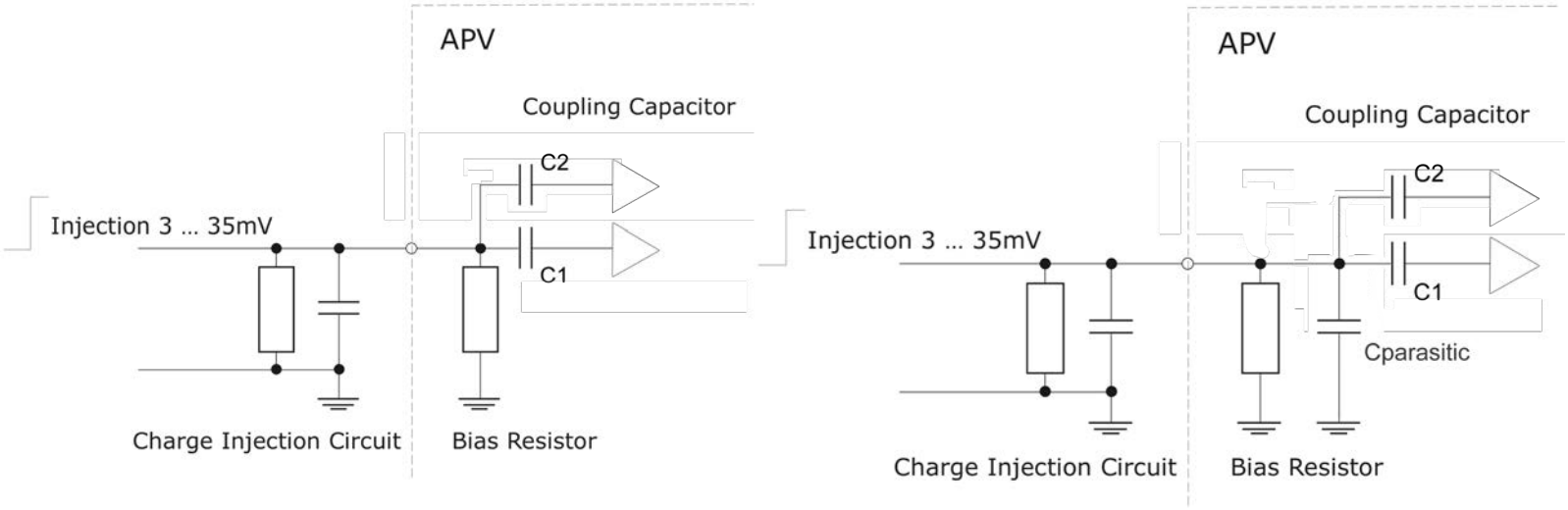

# Charge Sharing vs. Coupling Capacitor (2)

Plotting the percentage of shared charge vs. the ratio of coupling capacitors should give a horizontal line at ordinate 1

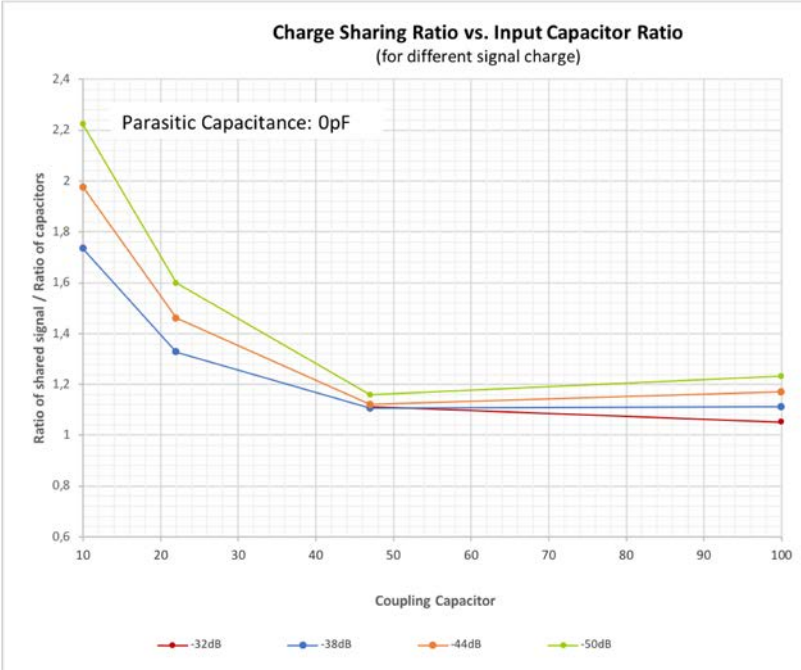


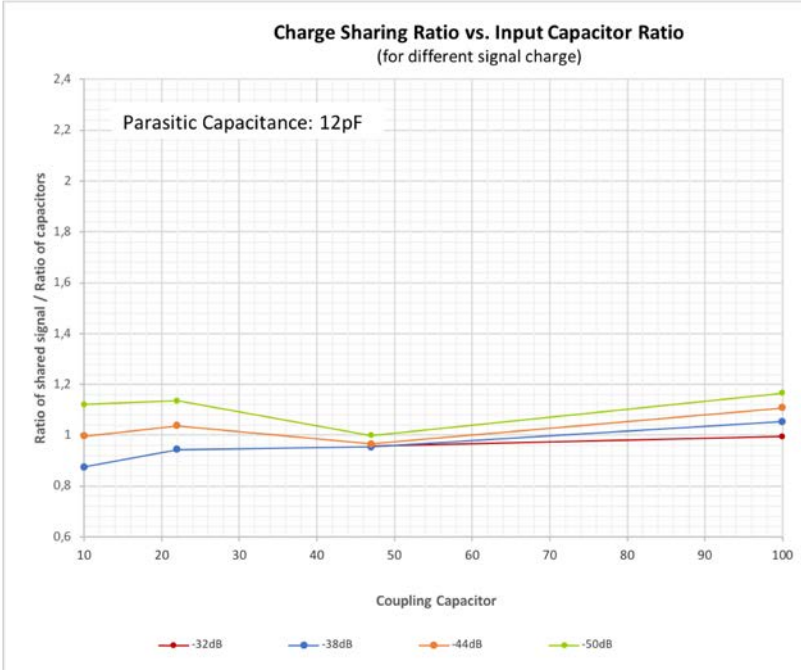


*not understood: dependence on amplitude; spread with lower capacitance*

# Data and plots:

*see e-Mail to Marek*