UK ILC Crab Thoughts

Graeme Burt

ILC-CC Design

Input Coupler

Based on the FNAL CKM Cavity

LOM Coupler

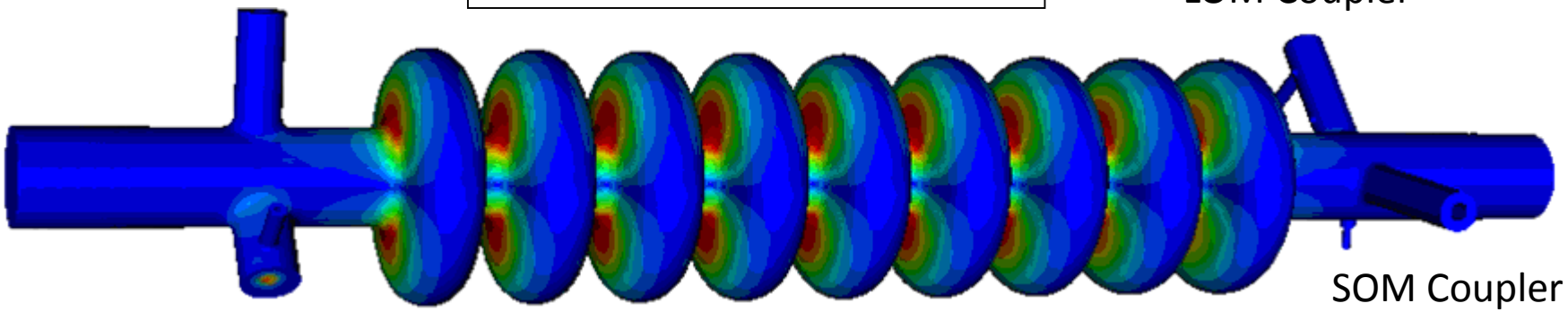

SOM Coupler

HOM Coupler

Beam-pipe radius = 18mm
Cavity iris radius = 15mm
Equator Radius = 47.37mm

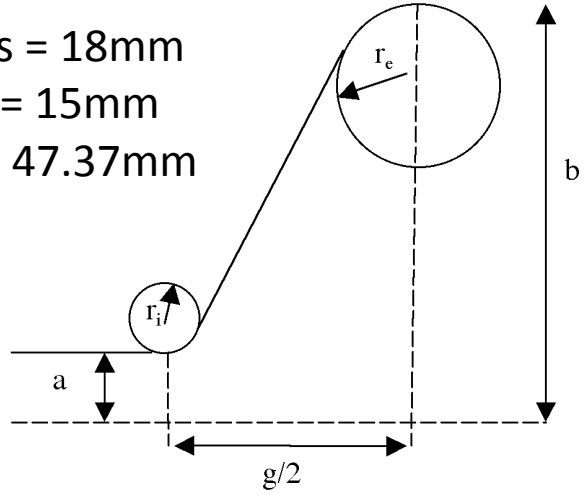

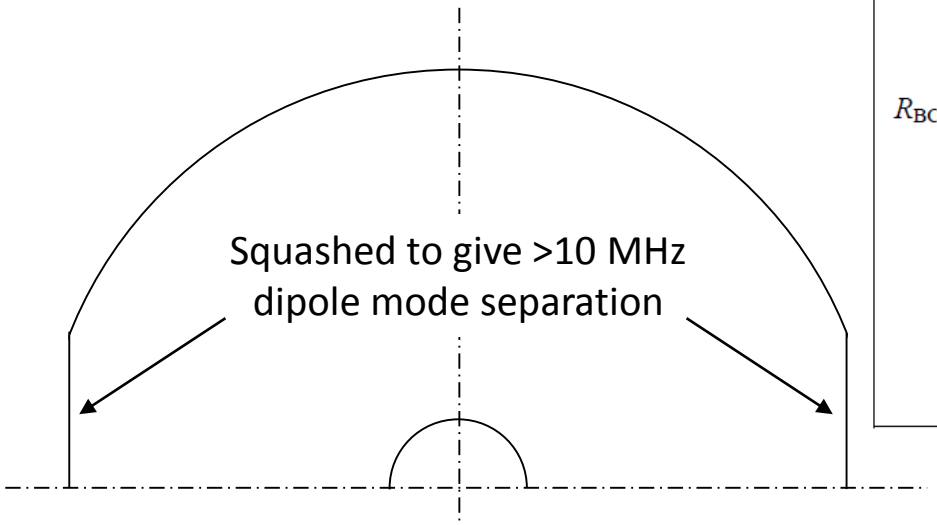

At 5MV/m $P_\perp$:	
B_{MAX}	73 mT
E_{MAX} U	16.6 MV/m 0.25 J
Q (Nb, room temp)	4780
$\left(R/Q\right)' = \frac{1}{2}\frac{\lvert V_L(r)\rvert^2}{\omega U}\left(\frac{c}{\omega r}\right)^2$	235 Ω
$G = Q \times R_{SURF}$	225Ω
R_{BCS}(best measurement) @ 1.8K	30nΩ
R_0(best measurement)	40nΩ
Q @ 70nΩ,1.8K	3.2×10^9
Surface power @ 70nΩ	1.9 W

1.3 GHz RFD cavity for ILC

- Same dimensions as the 3.9 GHz elliptical (100 mm height with 36 mm aperture)

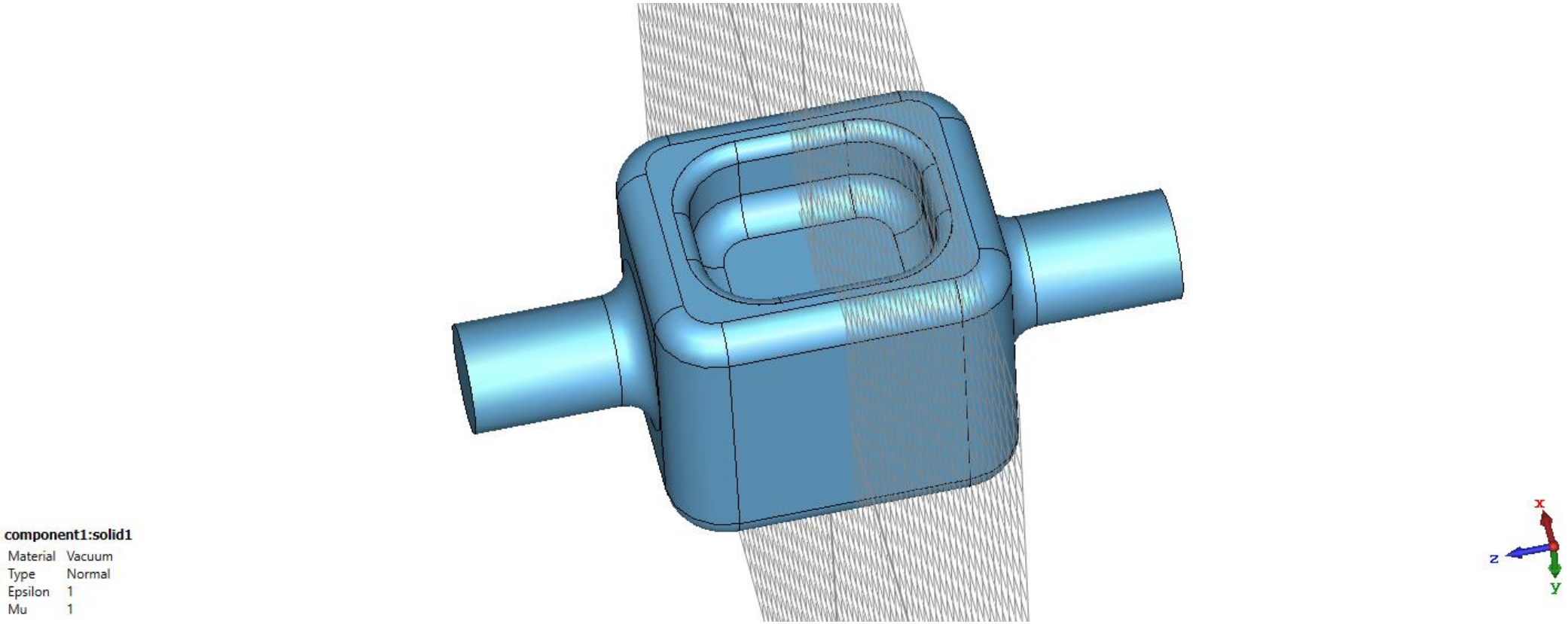

RF properties

- Lower peak magnetic fields than the 3.9 GHz elliptical (10 MV/m may be possible a single 9 cell cavity would be sufficient)
- Higher Epk but very low in both cases
- R/Q significantly less, probably not a major issue

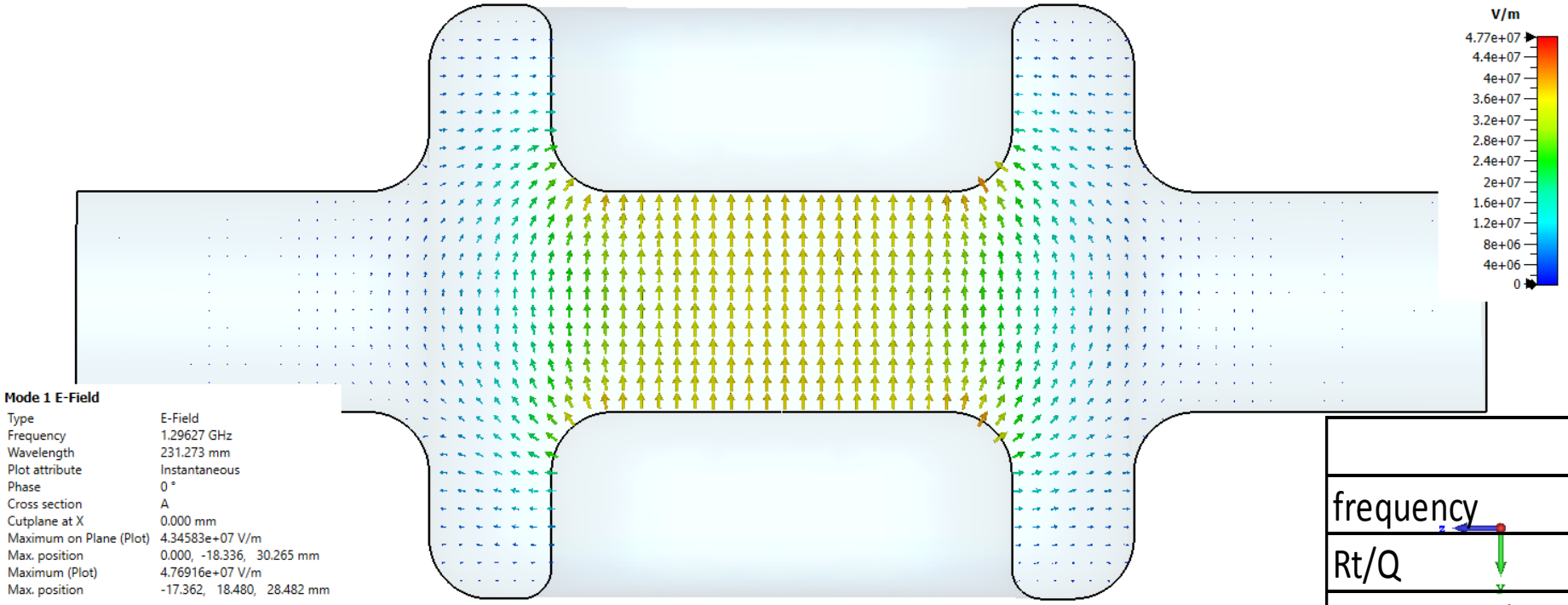

	RFD	Elliptical
frequency	1.3	3.9
Rt/Q	81.27428	235
Epk at 5 MV/m	23.69793	16.6
Hpk at 5 MV/m	54.98273	73

9 cell version

- Strong cell to cell coupling may allow more cells if required
- 230 MHz frequency separation between pi and 0 mode
- Cavity is long and thin (0.1m x 1m), may need stiffening. Two 5 cells may be better.

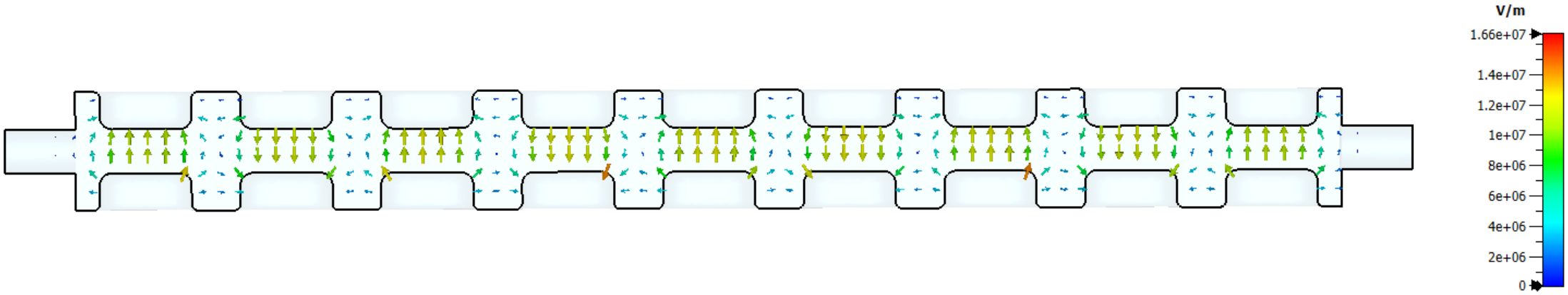

3.9 GHz elliptical: External Q factor s required for couplers

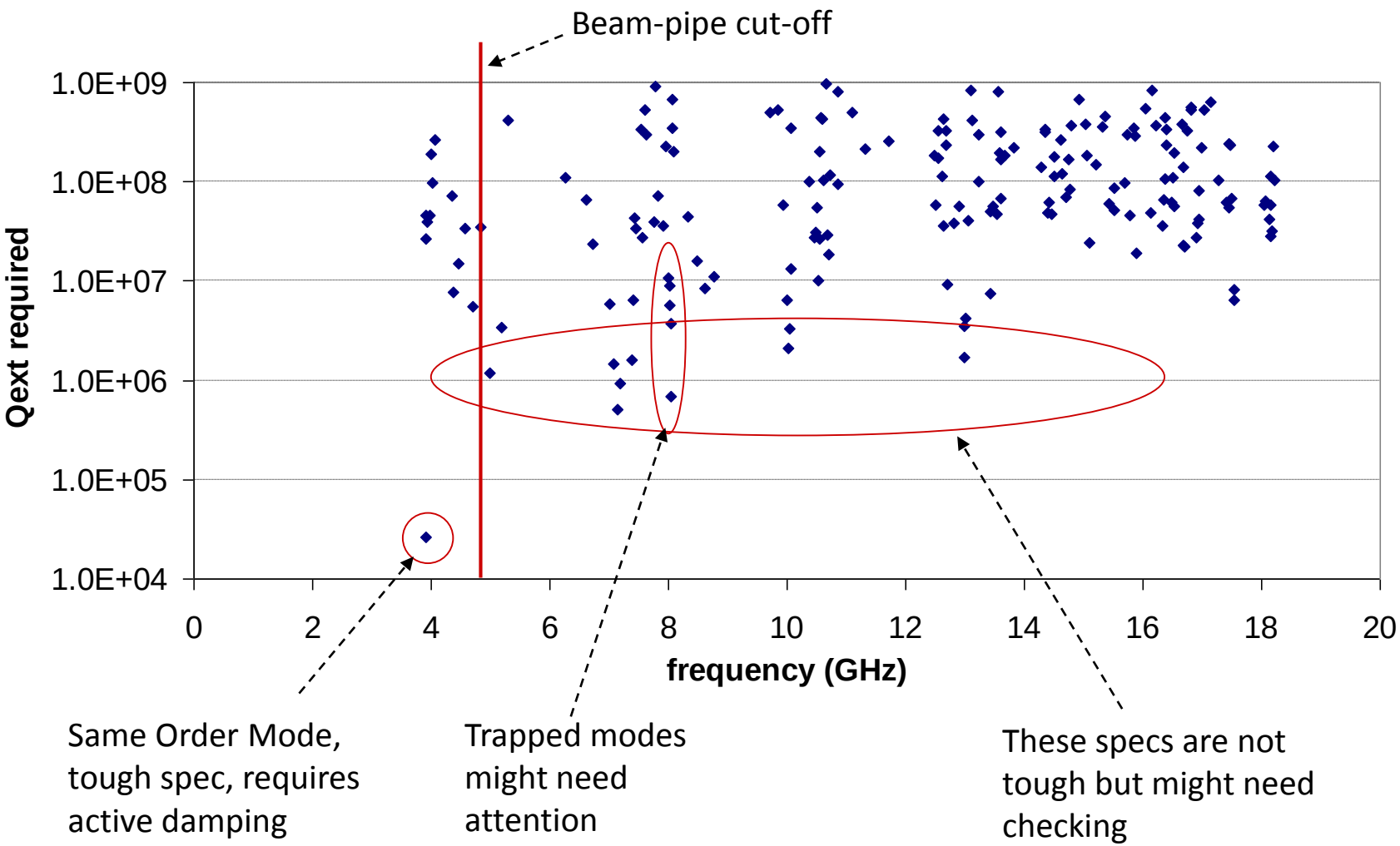

Mode Order	Frequency (MHz)	External Q
Monopole	2792	1.00E+08
Monopole	2796	1.00E+07
Monopole	2803	1.00E+07
Monopole	2811	2.00E+05
Monopole	2819	1.00E+07
Monopole	2827	2.00E+04
Monopole	2834	1.00E+06
Monopole	2839	1.00E+07
Monopole	2841	1.00E+09
Dipole	3912	2.63E+04
Dipole	7082	1.46E+06
Dipole	7136	5.14E+05
Dipole	7178	7.28E+05
Dipole	7390	1.60E+06
Dipole	8039	6.90E+05
Dipole	10029	2.12E+06
Dipole	10054	2.86E+06
Dipole	12989	3.49E+06
Dipole	12996	1.71E+06
Dipole	13014	2.81E+06
Dipole	17533	8.19E+06
Dipole	17541	4.55E+06

RFD resonances of note

1st monopole mode

- No lower order mode, 1st monopole is at 1.88 GHz
- Pretty fast attenuation in beamipe, will need on-cell coupling like LHC

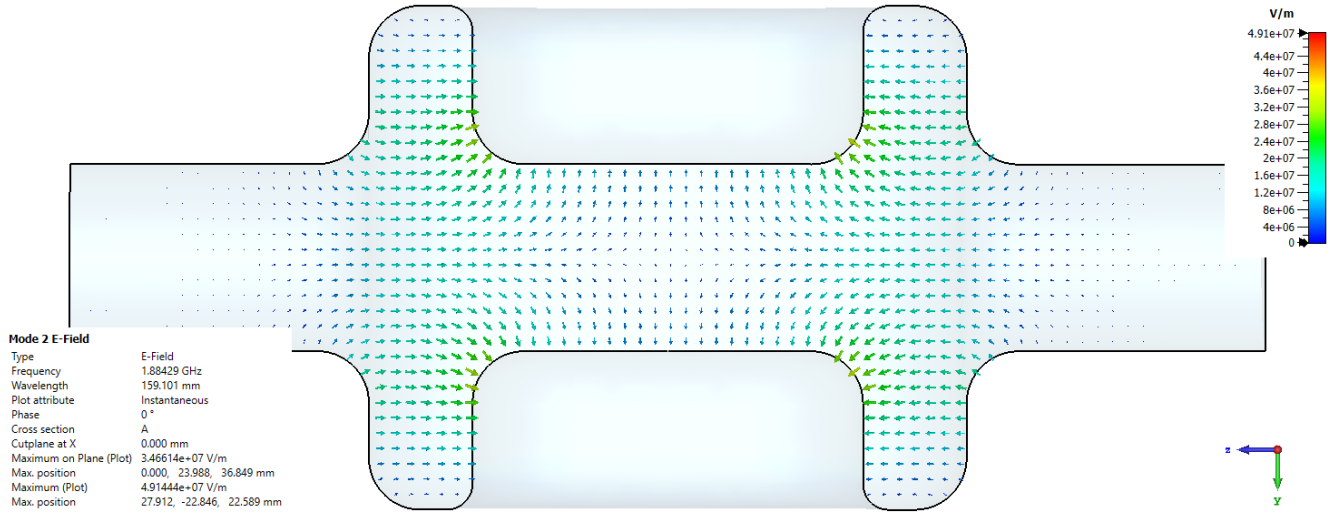

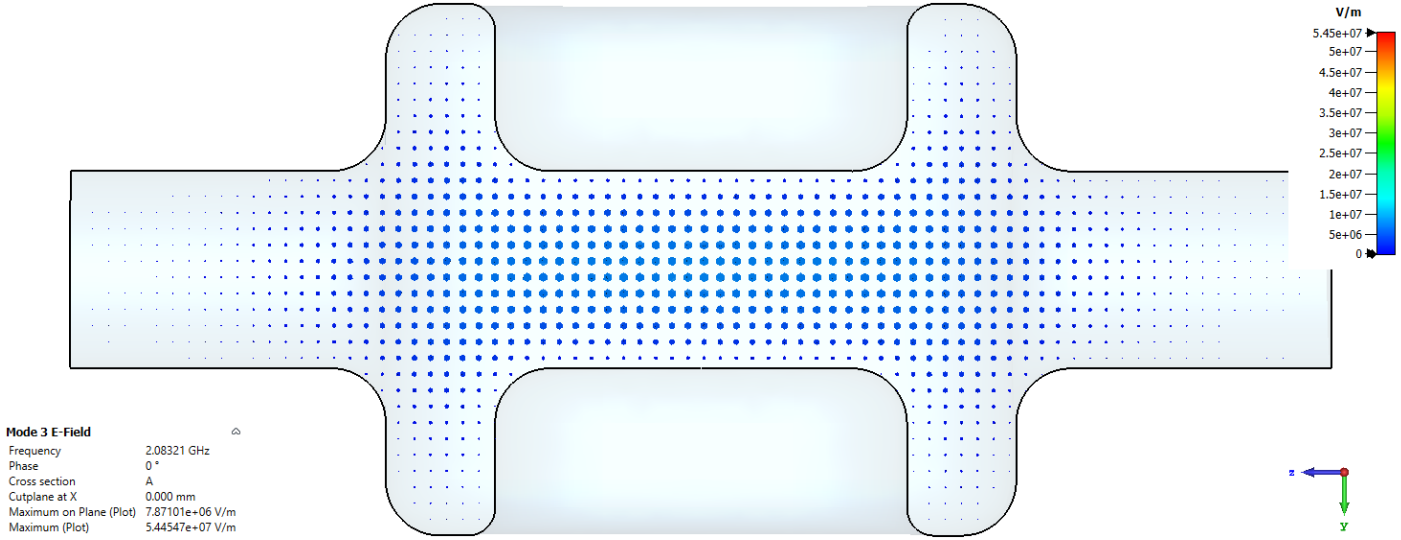

Same order mode

- Vertical dipole mode is at 2.08 GHz, well separated
- No longer an issue

LLRF/Synchronisation Scheme (Final)

- Crab to crab jitter is more important than crab to beam/clock so if using an external clock we need to half the jitter (or at least sqrt(2) for rms)
- We proposed an RF interferometer to measure the phase at each cavity and synchronise
- The longer the distance between cavities the harder that is, a longer distance would need optical links.
- Over 50 m RF beats optical in 2008, not clear if that's still true in 2020.
- Hadn't decided if we needed a single klystron and split the power or if the noise on each klystron would be small enough to have a klystron for each crab and still meet the phase spec.

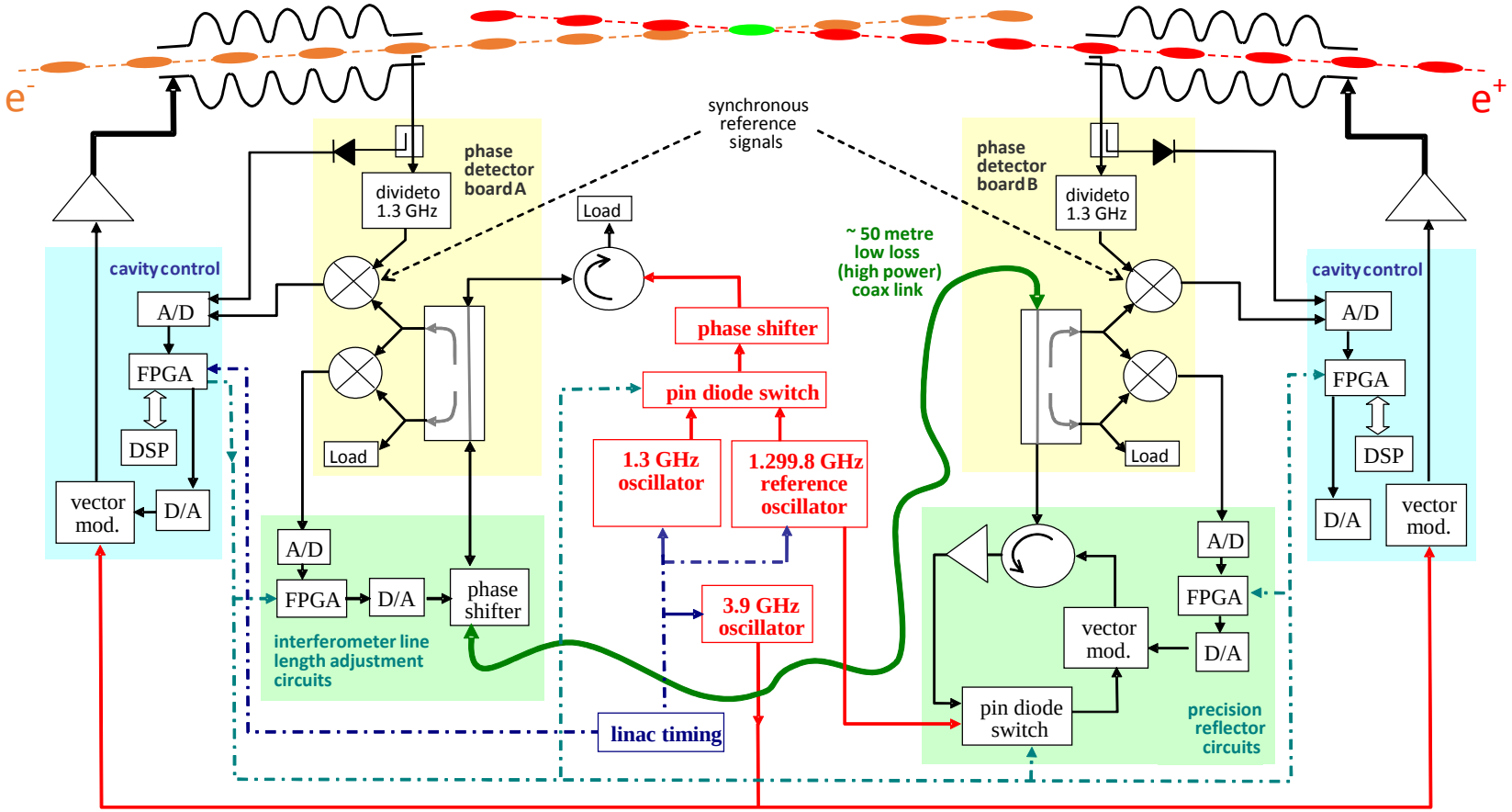

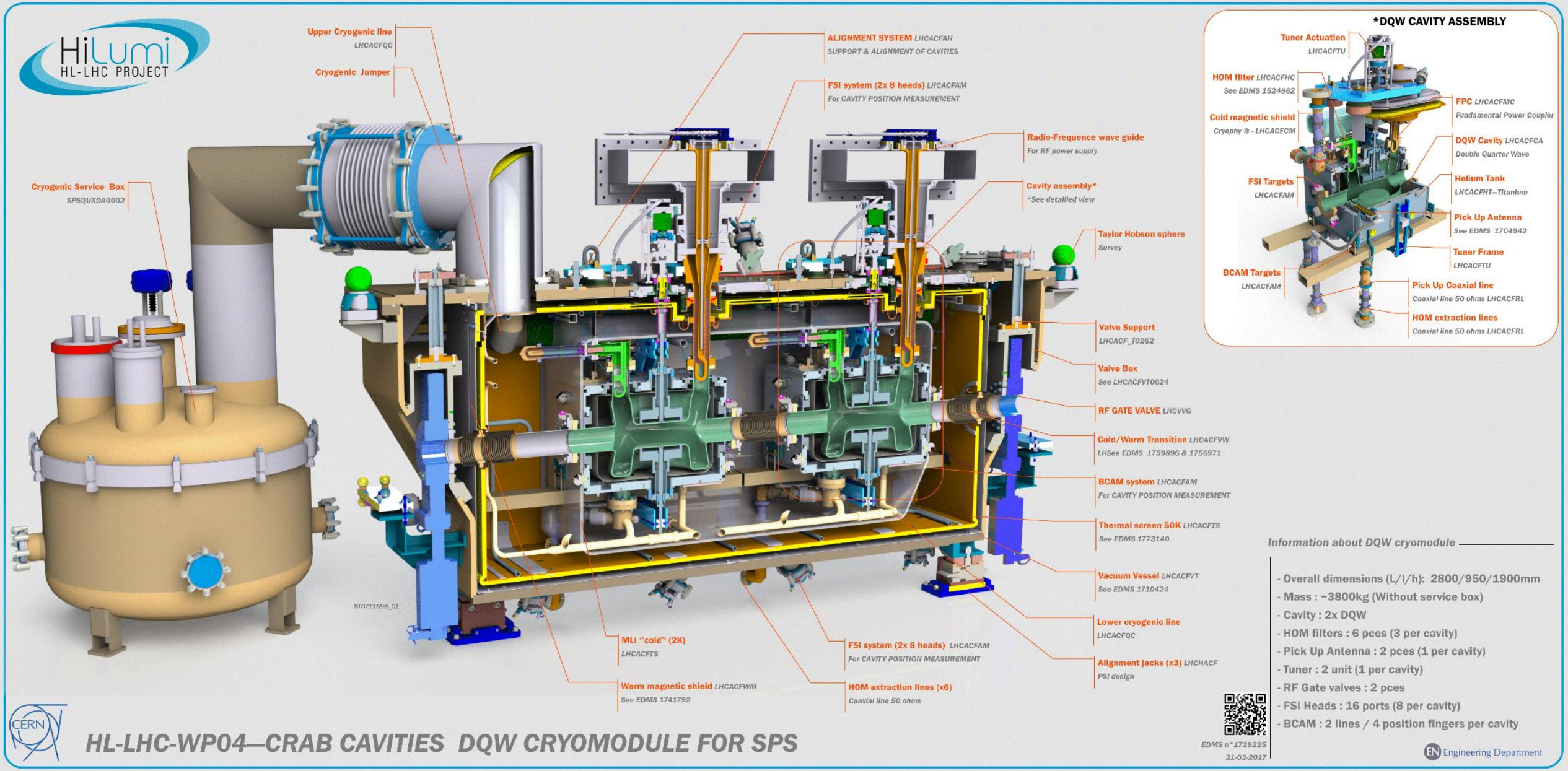
HiLumi
HL-LHC PROJECT
Upper Cryogenic line
LHCACFQC
Cryogenic Jumper
Cryogenic Service Box
SPSQUXDA0002
ALIGNMENT SYSTEM LHCACFAH
SUPPORT & ALIGNMENT OF CAVITIES
FSI system (2x 8 heads) LHCACFAM
For CAVITY POSITION MEASUREMENT
Radio-Frequence wave guide
For RF power supply
Cavity assembly*
*See detailled view
Taylor Hobson sphere
Survey
Valve Support
LHCACF_T0262
Valve Box
See LHCACFVT0024
RF GATE VALVE LHCVVG
Cold/Warm Transition LHCACFVW
LHSee EDMS 1759896 & 1756971
BCAM system LHCACFAM
For CAVITY POSITION MEASUREMENT
Thermal screen 50K LHCACFTS
See EDMS 1773140
Vacuum Vessel LHCACFVT
See EDMS 1710424
Lower cryogenic line
LHCACFQC
Alignment jacks (x3) LHCHACF
PSI design
MLI "cold" (2K)
LHCACFTS
Warm magnetic shield LHCACFWM
See EDMS 1741792
FSI system (2x 8 heads) LHCACFAM
For CAVITY POSITION MEASUREMENT
HOM extraction lines (x6)
Coaxial line 50 ohms
ST0711698_01
*DQW CAVITY ASSEMBLY
Tuner Actuation
LHCACFTU
HOM filter LHCACFHC
See EDMS 1524862
Cold magnetic shield
Cryophy ® - LHCACFCM
FSI Targets
LHCACFAM
BCAM Targets
LHCACFAM
FPC LHCACFMC
Fundamental Power Coupler
DQW Cavity LHCACFCA
Double Quarter Wave
Helium Tank
LHCACFHT–Titanium
Pick Up Antenna
See EDMS 1704942
Tuner Frame
LHCACFTU
Pick Up Coaxial line
Coaxial line 50 ohms LHCACFRL
HOM extraction lines
Coaxial line 50 ohms LHCACFRL
Information about DQW cryomodule
- Overall dimensions (L/l/h): 2800/950/1900mm
- Mass : ~3800kg (Without service box)
- Cavity : 2x DQW
- HOM filters : 6 pces (3 per cavity)
- Pick Up Antenna : 2 pces (1 per cavity)
- Tuner : 2 unit (1 per cavity)
- RF Gate valves : 2 pces
- FSI Heads : 16 ports (8 per cavity)
- BCAM : 2 lines / 4 position fingers per cavity
EDMS n°1729225
31-03-2017
CERN
HL-LHC-WP04—CRAB CAVITIES DQW CRYOMODULE FOR SPS
EN Engineering Department

ILC Crab Cavity Cryomodule solutions

- The solutions applied to HL-LHC may also suit the ILC-CC provided the dump beamline can be accommodated inside the Cryomodule.
- LHC/SPS has proven solutions with beamlines going through the cryomodule either inside or outside the LHe vessel.
- If this works for location at 14m then modifying it for the locations at 44m and 77m will not be too complicated.

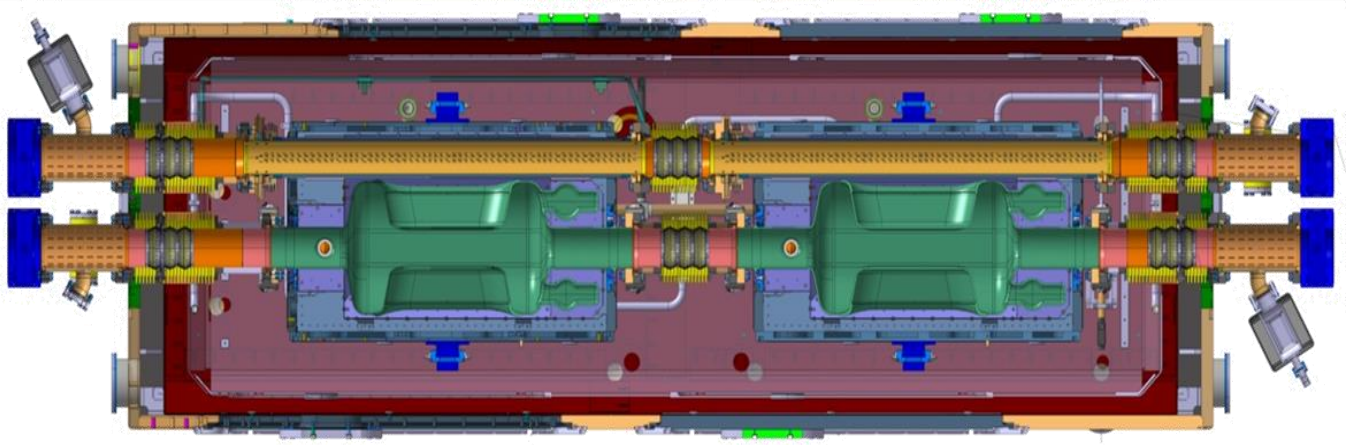

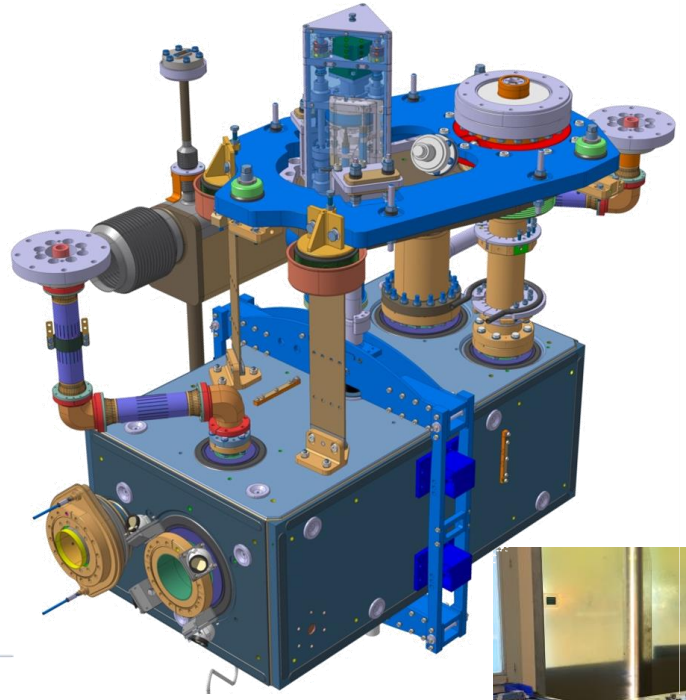

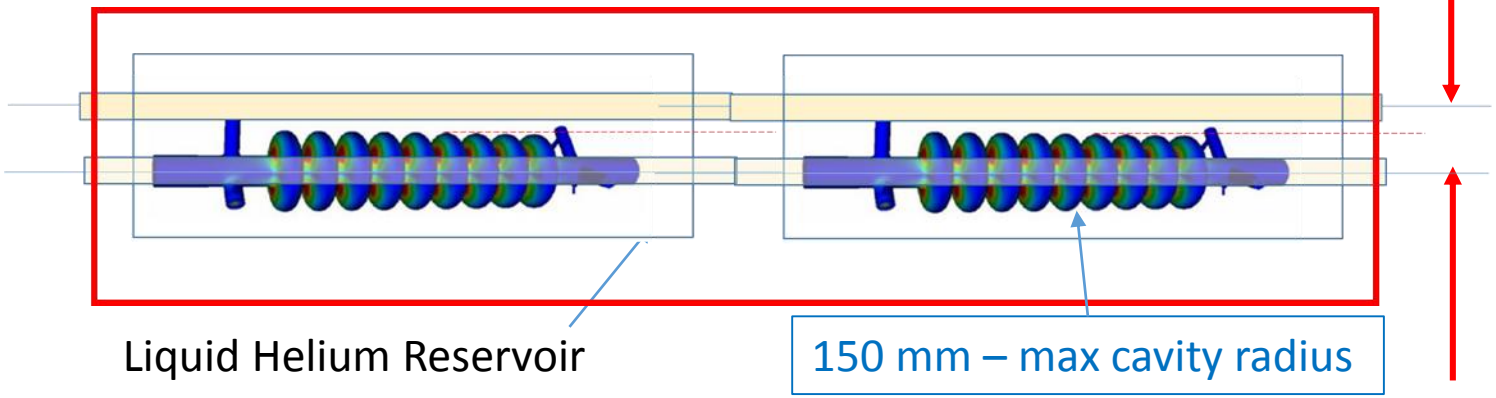

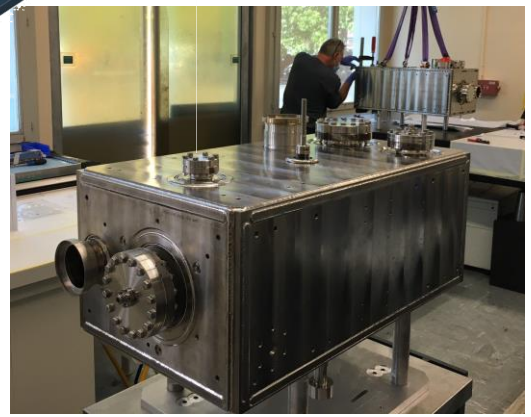

3.9 GHz LHe vessel

- CKM LHe vessel is 160 mm diameter and housed a 13 cell version of the ILC crab cavity and has a tuner that fits in ILC.
- Alignment tolerance on roll is 1 mrad, we proposed a 2nd single cell crab in the other plane to actively adjust crabbing plane (anti-crab)

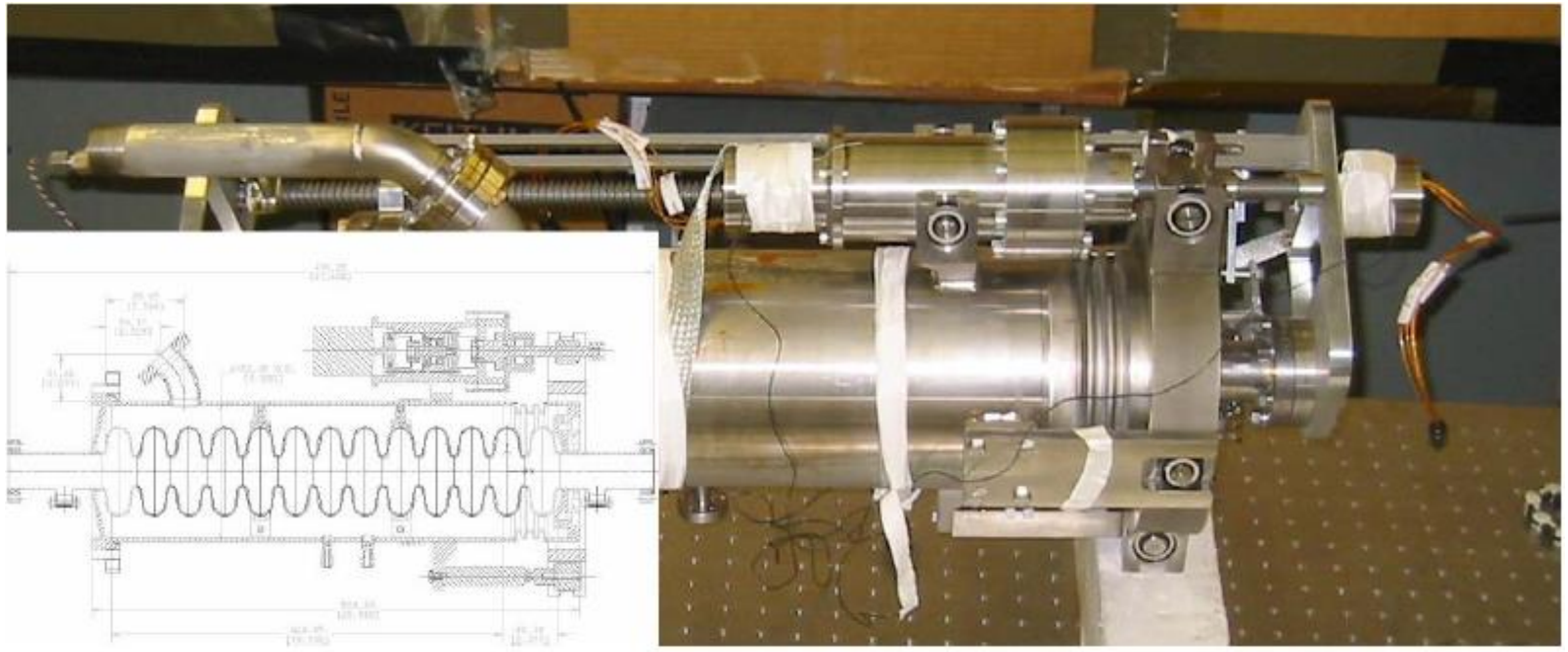

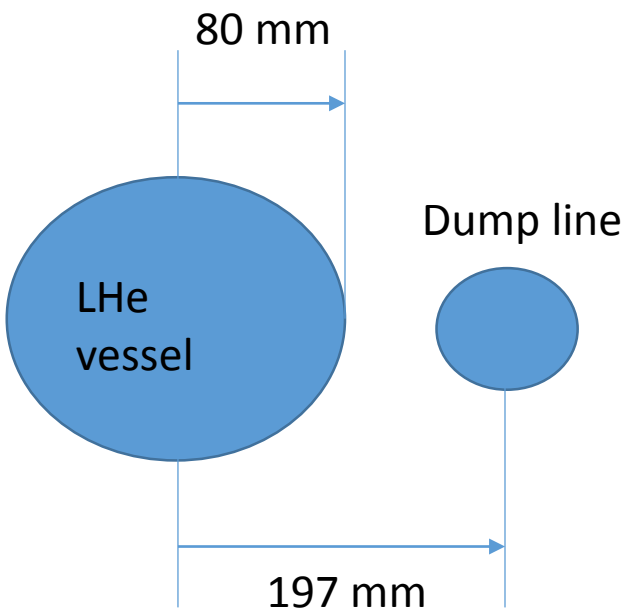

Conclusions

- Original location has no real issue, and the shorter distance may be better for synchronisation
- The dump line can go through the cryomodule (demonstrated at LHC)
- RFD @ 1.3 GHz has lower peak fields but will be twice as long. It also has no LOM and good separation to the SOM. Issues to be resolved are
  - Is a 9 cell cavity stiff enough?
  - Can we sufficiently damp the wakes with the small aperture?
  - Timing stability has the same spec but the phase spec is hence three times tighter. Is this achievable?
- The 3.9 GHz elliptical is fairly mature and meets requirements, is there a real need to have an RFD?